TABLE OF CONTENTS

Section		Page	
I	INTRODUCTION	1	1/A14
	A. Background Information	2	1/B2
	B. Stability and Control Derivatives	4	1/B3
	C. Transfer Function Factors	11	1/B12
II	HUGHES OH-6A	19	1/C7
III	BOEING VERTOL BO-105C	67	1/F14
IV	BELL AH-1G	115	2/C8
V	BELL UH-1H	213	3/C10
VI	SIKORSKY CH-53D	303	4/C4
REFERENCES		358	4/G4
Appendix			
A	PROCEDURE FOR FORMULATING EQUATIONS OF MOTION	359	4/G5
B	ANALYSIS OF MULTILOOP SYSTEM RELATIONSHIPS	371	5/A7

dem 831-H-14 NAS1.26:3144

JAN 3

COMPLETED
ORIGINAL

MICROFILMED FROM
BEST AVAILABLE COPY

NASA Contractor Report 3144

A Compilation and Analysis of Helicopter Handling Qualities Data

Volume One: Data Compilation

Robert K. Heffley, Wayne F. Jewell,
John M. Lehman, and Richard A. Van Winkle

CONTRACT NAS2-9344
AUGUST 1979

388

NASA

NASA Contractor Report 3144

A Compilation and Analysis of Helicopter Handling Qualities Data

Volume One: Data Compilation

Robert K. Heffley, Wayne F. Jewell,
John M. Lehman, and Richard A. Van Winkle
Systems Technology, Inc.
Mountain View, California

Prepared for
Ames Research Center
under Contract NAS2-9344

National Aeronautics
and Space Administration

Scientific and Technical
Information Branch

1979

FOREWORD

The preparation of this report was performed under NASA Contract NAS2-9344 with the joint sponsorship of the Aeromechanics Laboratory of the U. S. Army Research and Technology Laboratories (AVRADCOM) and NASA Ames Research Center. The Contract Technical Monitor was David L. Key, and the Systems Technology, Inc., Project Engineer was Robert K. Heffley. Work on this project was accomplished during the period from September 1976 to February 1978.

The author wishes to thank the following individuals for their contributions and help in preparing this volume: John M. Davis of the Aeromechanics Laboratory of the U. S. Army Research and Technology Laboratories; Linda James of Radu Data Service; and Sharon A. Duerksen of Systems Technology, Inc.

ABSTRACT

A compilation and an analysis of helicopter handling qualities data are presented in two volumes. This, the first volume, contains a collection of basic descriptive data, stability derivatives, and transfer functions for a six-degrees-of-freedom, quasi-static model. The data are arranged in a common, compact format for each of the five helicopters represented. The vehicles include the OH-6A, BO-105, AH-1G, UH-1H, and CH-53D. Basic data were supplied under separate contracts by the manufacturer or licensee of each helicopter. The second volume analyzes the data using multiloop, manual control methods. A general compensatory loop structure is applied to coupled longitudinal-lateral-directional equations in such a way that key handling qualities features can be examined directly. But the overall mathematical complexity is reduced from that of the basic vehicle model. Extensive use is made of constrained state variable relationships and approximate factors in order to gain physical insight.

TABLE OF CONTENTS

Section		Page
I	INTRODUCTION	1
	A. Background Information	2
	B. Stability and Control Derivatives	4
	C. Transfer Function Factors	11
II	HUGHES OH-6A	19
III	BOEING VERTOL BO-105C	67
IV	BELL AH-1G	115
V	BELL UH-1H	213
VI	SIKORSKY CH-53D	303
REFERENCES		358
Appendix		
A	PROCEDURE FOR FORMULATING EQUATIONS OF MOTION	359
B	ANALYSIS OF MULTILOOP SYSTEM RELATIONSHIPS	371

LIST OF TABLES

		Page
I-1	General Layout of Stability and Control Derivative Data	7
I-2	Conversion Factors	8
I-3	SI Units for Numerical Values of Stability and Control Derivatives	9
I-4	US Units for Numerical Values of Stability and Control Derivatives	10
I-5	The Extensive List of Control and Gust Numerators	13
I-6	The Abbreviated List of Control Numerators	15
II-1	OH-6A Descriptive Data	20
II-2	OH-6A Index of Flight Conditions for Derivatives and Transfer Function Factors	25
II-3	OH-6A Stability and Control Derivatives — SI Units . . .	26
II-4	OH-6A Stability and Control Derivatives — US Units . . .	35
II-5	OH-6A Transfer Function Factors	44
III-1	BO-105C Descriptive Data	68
III-2	BO-105C Index of Flight Conditions for Derivatives and Transfer Function Factors	73
III-3	BO-105C Stability and Control Derivatives — SI Units . .	74
III-4	BO-105C Stability and Control Derivatives — US Units . .	84
III-5	BO-105C Transfer Function Factors	94
IV-1	AH-1G Descriptive Data	116
IV-2	AH-1G Index of Flight Conditions for Derivatives and Transfer Function Factors	121
IV-3	AH-1G Stability and Control Derivatives — SI Units . . .	122

LIST OF TABLES (Concluded)

		Page
IV-4	AH-1G Stability and Control Derivatives — US Units . .	143
IV-5	AH-1G Transfer Function Factors	164
V-1	UH-1H Descriptive Data	214
V-2	UH-1H Index of Flight Conditions for Derivatives and Transfer Function Factors	219
V-3	UH-1H Stability and Control Derivatives — SI Units . .	220
V-4	UH-1H Stability and Control Derivatives — US Units . .	241
V-5	UH-1H Transfer Function Factors	262
VI-1	CH-53D Descriptive Data	304
VI-2	CH-53D Index of Flight Conditions for Derivatives and Transfer Function Factors	309
VI-3	CH-53D Stability and Control Derivatives — SI Units .	310
VI-4	CH-53D Stability and Control Derivatives — US Units .	316
VI-5	CH-53D Transfer Function Factors	322
A-1	Matrix Equations of Motion	365
A-2	Matrix Elements	366
A-3	Sample of Equations of Motion and Transformation Matrices (OH-6A, Hover)	369
A-4	Sample of Equations of Motion and Transformation Matrices (OH-6A, 60 kt)	370

LIST OF FIGURES

		Page
I-1	Assumed Pilot/Vehicle Loop Structure for Low Speed Flight	14
II-1	OH-6A General Arrangement	21
II-2	OH-6A Control System Description	22
II-3	OH-6A Loading Summary	24
III-1	BO-105C General Arrangement	69
III-2	BO-105C Control System Description	70
III-3	BO-105C Loading Summary	72
IV-1	AH-1G General Arrangement	117
IV-2	AH-1G Control System Description	118
IV-3	AH-1G Loading Summary	120
V-1	UH-1H General Arrangement	215
V-2	UH-1H Control System Description	216
V-3	UH-1H Loading Summary	218
VI-1	CH-53D General Arrangement	305
VI-2	CH-53D Control System Description	306
VI-3	CH-53D Loading Summary	308

LIST OF ABBREVIATIONS

AFCS	Automatic Flight Control System (CH-53D)
AND	Aircraft nose down
ANU	Aircraft nose up
BL	Butt line
FRL	Fuselage reference line
FS	Fuselage station
HD	Heave damping
MBB	Messerschmitt-Bölkow-Blohm
NOE	Nap of the earth
P	Phugoid (longitudinal)
PD	Pitch damping
PL	Lateral phugoid
R	Roll damping
RRA	Rotor reference axis (BO-105C)
SI	International system of units (Système International)
SP	Short period
TED	Trailing edge down
TEU	Trailing edge up
US	Standard U.S. units
WL	Water line
YD	Yaw damping

LIST OF SYMBOLS

A_{1_s}	Lateral cyclic swashplate deflection
B_{1_s}	Longitudinal cyclic swashplate deflection
DA	Also δ_A
DB	Also δ_B
DC	Also δ_c
DP	Also δ_p
g	Gravity constant
h	Altitude
$I_{()}$	Moment of inertia about ( ) axis
L	Rolling moment
$L_{()}$	Dimensional rolling moment derivative, $\frac{1}{I_x}\frac{\partial L}{\partial()}$
M	Pitching moment
$M_{()}$	Dimensional pitching moment derivative, $\frac{1}{I_y}\frac{\partial M}{\partial()}$
m	Mass
N	Yawing moment
$N_{()}$	Dimensional yawing moment derivative, $\frac{1}{I_z}\frac{\partial N}{\partial()}$
PHI	Also ϕ
PSI	Also ψ
p	Angular rate about body x-axis
q	Angular rate about body y-axis
r	Angular rate about body z-axis
THE	Also θ

LIST OF SYMBOLS (Continued)

U	Total body axis x-velocity, $U_o + u$
UG	Also u_g
u	Perturbation x-velocity
u_g	x-axis gust component (earth fixed reference frame)
V	Total body axis y-velocity, $V_o + v$
VG	Also v_g
v	Perturbation y-velocity
v_g	y-axis gust component (earth fixed reference frame)
W	Total body axis z-velocity, $W_o + w$
WG	Also w_g
w	Perturbation z-velocity
w_g	z-axis gust component (earth fixed reference frame)
X	Force along x-axis
$X_{()}$	Dimensional x-force derivative, $\frac{1}{m}\frac{\partial X}{\partial ()}$
XD	Also $\dot{x}$
x	Horizontal body axis (FRL axis system), positive forward
$\dot{x}$	Velocity along x-axis (earth fixed reference frame)
Y	Force along y-axis
$Y_{()}$	Dimensional y-force derivative, $\frac{1}{m}\frac{\partial Y}{\partial ()}$, also pilot compensation transfer function for () motion
YD	Also $\dot{y}$
y	Lateral body axis (FRL axis system), positive toward right side of aircraft
$\dot{y}$	Velocity along y-axis (earth fixed reference frame)
Z	Force along z-axis
$Z_{()}$	Dimensional z-force derivative, $\frac{1}{m}\frac{\partial Z}{\partial ()}$

LIST OF SYMBOLS (Concluded)

ZD	Also $\dot{z}$
	Vertical body axis (FRL axis system), positive downward
$\dot{z}$	Velocity along z-axis (earth fixed reference frame)
α	Angle of attack
β	Sideslip
γ	Flight path angle
δ	Control deflection
ζ	Damping ratio
Θ	Total pitch angle $\theta + \theta_o$
θ	Perturbation pitch Euler angle
Φ	Total roll angle $\phi + \phi_o$
ϕ	Perturbation Euler roll angle
Ψ	Total yaw angle $\psi + \psi_o$
ψ	Perturbation Euler yaw angle
ω	Natural frequency
$\triangleq$	Defined as

SUBSCRIPTS

A	Lateral cyclic cockpit control
B	Longitudinal cyclic cockpit control
c	Collective cockpit control, also commanded response
MR	Main rotor
o	Initial condition, steady state
p	Rudder pedal
TR	Tail rotor

SECTION I

INTRODUCTION

This is the first volume of a two volume series presenting a compilation and analysis of helicopter handling qualities data. In this volume basic handling qualities data are given for five single rotor helicopters representing various combinations of sizes, intended missions, control and augmentation systems, and rotor system concepts. The second volume (Ref. 1) analyzes a portion of the compiled data using multiloop, manual control methods. In fact, the main purpose of Volume Two is to serve as a guide to one way in which the data can be used.

The data compilation is a condensation of individual packages of six-degrees-of-freedom, quasi-static data procured from each respective helicopter manufacturer by the Aeromechanics Laboratory of the U. S. Army Research and Technology Laboratories (AVRADCOM) and the National Aeronautics and Space Administration (NASA). The data have been developed into a form which is useful for analysis of manual control in the low speed, low altitude flight regime, especially nap-of-the-earth (NOE) operation. An effort has been made to maintain a consistent data format among all five subject vehicles.

The five helicopters included in this volume are the:

- Hughes OH-6A (Cayuse)
- Boeing-Vertol* BO-105C
- Bell AH-1G (HueyCobra)
- Bell UH-1H (Huey)
- Sikorsky CH-53D (Sea Stallion).

The data presented for each helicopter include a verbal description of important or unusual features affecting handling qualities, a geometrical description, a flight control system schematic, stability and control system

---

* Sold under license from Messerschmitt-Bölkow-Blohm (MBB).

derivatives, and transfer function factors. Stability and control derivatives are given for all flight conditions included in the original manufacturers' data packages (a total of nearly 200 conditions). Transfer function factors are given for selected flight conditions and for state variables most relevant to head-up flight reference at low altitude. These data are arranged by helicopter in each of the subsequent sections.

The formats used in presenting these helicopter data have been carefully planned, first to maximize their direct usefulness, and second to maximize compactness. For the most part, notation and sign conventions are borrowed directly from Ref. 2. In the following pages of introduction the report format is explained in some detail in order to facilitate its use. The explanation of format is divided into background information, stability and control derivatives, and transfer function data.

A. BACKGROUND INFORMATION

Each helicopter section contains several pages of background information which provides descriptive material of a general nature in addition to a definition of configurations and flight conditions for the tables of derivatives and transfer function factors. The primary sources of information for each respective vehicle are Refs. 3, 4, 5, and 6. (These are the sole sources for derivative data.) Miscellaneous pieces of descriptive information are drawn, however, from the other sources as noted.

The verbal description presented at the beginning of each section gives a brief sketch of the vehicle's intended mission, size, propulsion system, and any unusual aspects. Important features of the control system as they relate to vehicle handling are also described.

The first table in each section lists important descriptive data concerning the rotor system and airfoils. These data have been taken from the primary sources except where noted.

A general arrangement drawing is included to show important airframe design features and to define the commonly used fuselage reference line (FRL) axis system. FRL axes are scaled in terms of fuselage station (FS), butt line (BL), and waterline (WL). FS, BL, and WL scales are parallel to

the x, y, and z axes respectively. (The axis system for derivatives has its origin at the vehicle center of gravity.)

The second figure in each section describes the flight control and augmentation systems. The figure includes a block diagram and a tabulation of cockpit controller characteristics. The values given in block diagrams correspond to those used in computation of control derivatives and transfer function factors and are taken directly from the primary data sources (except where algebraic manipulation was required to establish a common format). In the block diagrams the units of cockpit control deflections are expressed as percentage of maximum control travel and all angular quantities are expressed in degrees. (Note that for tabulated transfer function factors units are inches for control deflection and radians for angles.) The control system description given for each helicopter assumes a cockpit-control-fixed condition. Thus, force feedback from either the rotor system (as in the case of the OH-6A) or from an automatic trim system (CH-53D) is not modeled. Where a fixed control force gradient is used (BO-105, AH-1G, and UH-1H) the values are given.

A loading summary is presented in the third figure in each section which describes the specific loading configurations included in the tabulated derivative data in relation to the allowable weight and cg envelope.

This is followed by a second table, a master index of flight conditions for the tabulated stability and control derivative data and transfer function data. A single set of flight condition case numbers (1 to 199) is used to encompass all five helicopters. This avoids confusion of a common case number between two different vehicles. The case numbers are assigned as follows:

VEHICLE	CASE NUMBERS
OH-6A	1 through 26
BO-105C	27 through 55
AH-1G	56 through 118
UH-1H	119 through 181
CH-53D	182 through 199

The third and fourth tables in each section contain stability and control derivatives in SI units and US units, respectively. The fifth table lists all transfer function data. The specific format of these three tables is defined and discussed below.

B. STABILITY AND CONTROL DERIVATIVES

Stability and control derivatives can be presented in a variety of forms involving various reference frames, state variables, and dimensionalization schemes.

In studying aircraft dynamics one particularly useful way of dimensionalizing derivatives is to reduce force and moment derivatives to the dimensions of specific force and specific moment, i.e., normalizing force and moment by mass and moment of inertia, respectively. This more directly relates the derivatives to motion quantities, and, by properly choosing state variables, many of the derivatives themselves have useful dimensions of inverse time or frequency.

In selecting a reference frame for the stability derivatives there are two popular choices, the stability axis system or the fuselage reference line (FRL) axis system. The stability axis system is attractive, at least for conventional aircraft. Vertical velocity Coriolis terms do not appear in the resulting equations of motion (e.g., $W_o q$) which simplifies the approximate factors relationships, such as those given in Ref. 2. In addition, some stability axis derivatives are, themselves, easily estimated from certain basic parameters (such as C_L or C_{L_α} in the case of airplanes). Unfortunately, the stability axis system has difficulties at low forward velocities where the trim angle of attack can take on large values. This is, of course, one important regime of interest for helicopters. Therefore, we considered an alternative.

Fuselage reference line axis (often referred to as body axis) derivatives, while less desirable for conventional aircraft, may be better suited to helicopters. The derivatives themselves are better behaved at low speeds. That is, derivative values do not radically change due to small changes in flight condition. Also, most of the FRL derivatives are approximately

equal to stability axis derivatives so long as α_o is small. Perhaps the most compelling argument in their favor, though, is that FRL axis derivatives appear to be the most widely used for rotary wing aircraft.

Another aspect in choosing the form of stability and control derivatives is use of primed versus unprimed derivatives. Primed derivatives incorporate the product of inertia effects and eliminate their explicit appearance in the equations of motion. They are defined as:

$$L'_{()} = \frac{L_{()} + \frac{I_{xz}}{I_x} N_{()}}{1 - \frac{I_{xz}^2}{I_x I_z}}$$

$$N'_{()} = \frac{N_{()} + \frac{I_{xz}}{I_z} L_{()}}{1 - \frac{I_{xz}^2}{I_x I_z}}$$

If the aircraft is symmetric about the x-z plane, then only an I_{xz} cross product of inertia term is present and only the roll and yaw equations are affected. Primed lateral-directional stability and control derivatives, especially in the stability axis system, thus have the advantage of conveying more information about the overall airplane dynamics than do their unprimed counterparts. It should be added that primed derivatives are, in fact, widely used.

In choosing the independent variables of the derivatives it is the convention to simply use the translational and angular velocities corresponding to the axis system used. For the FRL axis system these variables are u, v, w, p, q, r. Note, however, that a different set of state variables was chosen for transfer function factors.

Control variables can be expressed as either cockpit controller deflections, control surface deflections, or rotor blade pitch. Each appears equally popular, but the first is most relevant to handling qualities matters.

A final issue is the system of units. While US units are customary, it is desirable to include SI units also. Thus, two sets of stability derivative tables are presented, one for each unit system.

To summarize:

- The standard form of dimensional body-fixed stability and control derivatives is utilized
- These derivatives are taken with respect to an FRL axis system
- Lateral-directional moment derivatives are primed
- Control variables correspond to cockpit controller deflections
- Both US and SI units are presented.

Tabulations of stability and control derivatives are given in Tables -3 and -4 in each of the helicopter sections (II through VI) for SI units and US units, respectively. The general layout of data for each flight condition is shown in Table I-1. This consists of:

- A line identifying the flight condition
- An array of trim conditions — angles and velocities
- An array of stability and control derivatives which is partitioned into longitudinal and lateral-directional parts.

Conversion factors used throughout the data compilation are shown in Table I-2.

The units for each quantity displayed in stability and control derivative tables are shown in Table I-3 for SI units and Table I-4 for US units.

TABLE I-1

GENERAL LAYOUT OF STABILITY AND CONTROL DERIVATIVE DATA

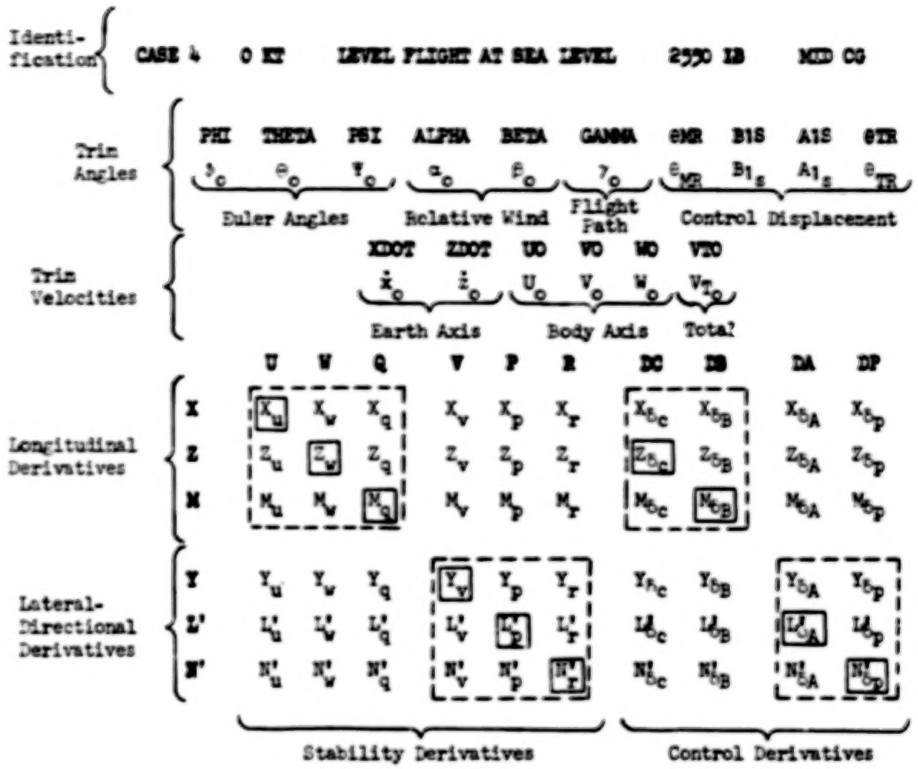

Solid boxes enclose on-diagonal stability derivatives and direct control derivatives

Dashed boxes enclose usual three degrees of freedom derivatives

TABLE I-2

CONVERSION FACTORS

LENGTH	$\frac{m}{ft} = .3048$
MASS/ WEIGHT	$\frac{kg}{lb} = .45359237$
MOMENT OF INERTIA	$\frac{kg\text{-}m^2}{slug\text{-}ft^2} = .45359237 \times 9.80665 \times .3048 \doteq 1.3558$
GRAVITY	$g = 9.80665\ m/sec^2 = \frac{9.80665}{.3048}\ ft/sec^2 \doteq 32.174\ ft/sec^2$
VELOCITY	$\frac{kt}{m/sec} = \frac{1852}{3600} \doteq .514$
	$\frac{kt}{ft/sec} = \frac{1852}{3600 \times .3048} \doteq 1.688$
FORCE	$\frac{N}{lb} = .45359237 \times 9.80665 \doteq 4.448$

TABLE I-3

SI UNITS FOR NUMERICAL VALUES OF STABILITY AND CONTROL DERIVATIVES

CASE 4 C KT LEVEL FLIGHT AT SEA LEVEL 1157 KG MID CG

PHI	THETA	PSI	ALPHA	BETA	GAMMA	GNR	B1S	A1S	GTR
ϕ_o(deg)	θ_o(deg)	ψ_o(deg)	α_o(deg)	β_o(deg)	γ_o(deg)	θ_{MR}(deg)	B_{1_s}(deg)	A_{1_s}(deg)	θ_{TR}(deg)

XDOT	ZDOT	UO	VO	WO	VTO
$\dot{x}_o$(m/sec)	$\dot{z}_o$(m/sec)	U_o(m/sec)	V_o(m/sec)	W_o(m/sec)	V_{T_o}(m/sec)

	U	W	Q	V	P	R	DC	DB	DA	DP
X	X_u(1/sec)	X_w(1/sec)	$X_q(\frac{m}{sec\text{-}rad})$	X_v(1/sec)	$X_p(\frac{m}{sec\text{-}rad})$	$X_r(\frac{m}{sec\text{-}rad})$	$X_{\delta_C}(\frac{m}{sec^2\text{-}cm})$	$X_{\delta_B}(\frac{m}{sec^2\text{-}cm})$	$X_{\delta_A}(\frac{m}{sec^2\text{-}cm})$	$X_{\delta_P}(\frac{m}{sec^2\text{-}cm})$
Z	Z_u(1/sec)	Z_w(1/sec)	$Z_q(\frac{m}{sec\text{-}rad})$	Z_v(1/sec)	$Z_p(\frac{m}{sec\text{-}rad})$	$Z_r(\frac{m}{sec\text{-}rad})$	$Z_{\delta_C}(\frac{m}{sec^2\text{-}cm})$	$Z_{\delta_B}(\frac{m}{sec^2\text{-}cm})$	$Z_{\delta_A}(\frac{m}{sec^2\text{-}cm})$	$Z_{\delta_P}(\frac{m}{sec^2\text{-}cm})$
M	$M_u(\frac{rad}{m\text{-}sec})$	$M_w(\frac{rad}{m\text{-}sec})$	M_q(1/sec)	$M_v(\frac{rad}{m\text{-}sec})$	M_p(1/sec)	M_r(1/sec)	$M_{\delta_C}(\frac{rad}{sec^2\text{-}cm})$	$M_{\delta_B}(\frac{rad}{sec^2\text{-}cm})$	$M_{\delta_A}(\frac{rad}{sec^2\text{-}cm})$	$M_{\delta_P}(\frac{rad}{sec^2\text{-}cm})$
Y	Y_u(1/sec)	Y_w(1/sec)	$Y_q(\frac{m}{sec\text{-}rad})$	Y_v(1/sec)	$Y_p(\frac{m}{sec\text{-}rad})$	$Y_r(\frac{m}{sec\text{-}rad})$	$Y_{\delta_C}(\frac{m}{sec^2\text{-}cm})$	$Y_{\delta_B}(\frac{m}{sec^2\text{-}cm})$	$Y_{\delta_A}(\frac{m}{sec^2\text{-}cm})$	$Y_{\delta_P}(\frac{m}{sec^2\text{-}cm})$
L'	$L'_u(\frac{rad}{m\text{-}sec})$	L'_w(1/sec)	L'_q(1/sec)	$L'_v(\frac{rad}{m\text{-}sec})$	L'_p(1/sec)	L'_r(1/sec)	$L'_{\delta_C}(\frac{rad}{sec^2\text{-}cm})$	$L'_{\delta_B}(\frac{rad}{sec^2\text{-}cm})$	$L'_{\delta_A}(\frac{rad}{sec^2\text{-}cm})$	$L'_{\delta_P}(\frac{rad}{sec^2\text{-}cm})$
N'	$N'_u(\frac{rad}{m\text{-}sec})$	N'_w(1/sec)	N'_q(1/sec)	$N'_v(\frac{rad}{m\text{-}sec})$	N'_p(1/sec)	N'_r(1/sec)	$N'_{\delta_C}(\frac{rad}{sec^2\text{-}cm})$	$N'_{\delta_B}(\frac{rad}{sec^2\text{-}cm})$	$N'_{\delta_A}(\frac{rad}{sec^2\text{-}cm})$	$N'_{\delta_P}(\frac{rad}{sec^2\text{-}cm})$

TABLE I-4

US UNITS FOR NUMERICAL VALUES OF STABILITY AND CONTROL DERIVATIVES

CASE 4 0 KT LEVEL FLIGHT AT SEA LEVEL 2950 LB MID CG

PHI	THETA	PSI	ALPHA	BETA	GAMMA	HR	B1S	A1S	TR
ϕ_o(deg)	θ_o(deg)	ψ_o(deg)	α_o(deg)	β_o(deg)	γ_o(deg)	θ_{HR}(deg)	$B1_s$(deg)	$A1_s$(deg)	θ_{TR}(deg)

XDOT	ZDOT	UO	VO	WO	VZO
$\dot{x}_o$(ft/sec)	$\dot{z}_o$(ft/sec)	U_o(ft/sec)	V_o(ft/sec)	W_o(ft/sec)	V_{Z_o}(ft/sec)

	U	W	Q	V	P	R	DC	DB	DA	DP
X	X_u(1/sec)	X_w(1/sec)	$X_q(\frac{ft}{sec-rad})$	X_v(1/sec)	$X_p(\frac{ft}{sec-rad})$	$X_r(\frac{ft}{sec-rad})$	$X_{\delta_C}(\frac{ft}{sec^2-in})$	$X_{\delta_B}(\frac{ft}{sec^2-in})$	$X_{\delta_A}(\frac{ft}{sec^2-in})$	$X_{\delta_P}(\frac{ft}{sec^2-in})$
Z	Z_u(1/sec)	Z_w(1/sec)	$Z_q(\frac{ft}{sec-rad})$	Z_v(1/sec)	$Z_p(\frac{ft}{sec-rad})$	$Z_r(\frac{ft}{sec-rad})$	$Z_{\delta_C}(\frac{ft}{sec^2-in})$	$Z_{\delta_B}(\frac{ft}{sec^2-in})$	$Z_{\delta_A}(\frac{ft}{sec^2-in})$	$Z_{\delta_P}(\frac{ft}{sec^2-in})$
M	$M_u(\frac{rad}{ft-sec})$	$M_w(\frac{rad}{ft-sec})$	M_q(1/sec)	$M_v(\frac{rad}{ft-sec})$	M_p(1/sec)	M_r(1/sec)	$M_{\delta_C}(\frac{rad}{sec^2-in})$	$M_{\delta_B}(\frac{rad}{sec^2-in})$	$M_{\delta_A}(\frac{rad}{sec^2-in})$	$M_{\delta_P}(\frac{rad}{sec^2-in})$
Y	Y_u(1/sec)	Y_w(1/sec)	$Y_q(\frac{ft}{sec-rad})$	Y_v(1/sec)	$Y_p(\frac{ft}{sec-rad})$	$Y_r(\frac{ft}{sec-rad})$	$Y_{\delta_C}(\frac{ft}{sec^2-in})$	$Y_{\delta_B}(\frac{ft}{sec^2-in})$	$Y_{\delta_A}(\frac{ft}{sec^2-in})$	$Y_{\delta_P}(\frac{ft}{sec^2-in})$
L'	$L'_u(\frac{rad}{ft-sec})$	L'_w(1/sec)	L'_q(1/sec)	$L'_v(\frac{rad}{ft-sec})$	L'_p(1/sec)	L'_r(1/sec)	$L'_{\delta_C}(\frac{rad}{sec^2-in})$	$L'_{\delta_B}(\frac{rad}{sec^2-in})$	$L'_{\delta_A}(\frac{rad}{sec^2-in})$	$L'_{\delta_P}(\frac{rad}{sec^2-in})$
N'	$N'_u(\frac{rad}{ft-sec})$	N'_w(1/sec)	N'_q(1/sec)	$N'_v(\frac{rad}{ft-sec})$	N'_p(1/sec)	N'_r(1/sec)	$N'_{\delta_C}(\frac{rad}{sec^2-in})$	$N'_{\delta_B}(\frac{rad}{sec^2-in})$	$N'_{\delta_A}(\frac{rad}{sec^2-in})$	$N'_{\delta_P}(\frac{rad}{sec^2-in})$

C. TRANSFER FUNCTION FACTORS

Transfer function factors are provided to enable a reasonably direct analysis of a wide range of handling qualities features. This required a careful choice of transfer function states and of transfer function numerator combinations.

The states to be associated with stability and control derivatives do not necessarily correspond to those used by the pilot in closing his control loops. For example, the inertial x-velocity in the FRL axis, u, is an appropriate state variable for the aerodynamic derivatives but is not directly perceived by the pilot by outside visual reference nor from cockpit instruments. Thus, a body-fixed FRL axis u transfer function is of little use in analyzing the pilot's control of the forward velocity or position.

In choosing the states to be used in analyses, the determining factor is taken to be the pilot's direct visual reference. In the case of a helicopter operating at low speed flight with outside visual reference, the most appropriate set of states is believed to be $\dot{x}$, $\dot{y}$, $\dot{z}$ ($\dot{z} = -\dot{h}$), φ, θ, and ψ. Thus, velocities are defined with respect to an earth-fixed, earth-aligned reference frame, and angles are defined in terms of the conventional aircraft Euler angle set.

The control variables considered most pertinent are cockpit control deflections which include longitudinal cyclic, δ_B; lateral cyclic, δ_A; collective, δ_C; and pedal, δ_P. As with the state variables chosen, these control variables are directly meaningful to the pilot.

Finally, disturbance variables are defined as airmass velocities in an earth-fixed axis system. These variables are labeled u_g, w_g, v_g, p_g, q_g, and r_g, but differ from the usual body-fixed convention as described in Section 4-6 of Ref. 2. This permits a direct correspondence to a spatially dependent gust description.

Transfer function data are arranged by flight condition according to the master index in the second table in each section. Transfer functions are expressed as factored polynomials of the system denominator and a large number of important control and gust numerators.

At three flight conditions, hover, 20 kt, and 60 kt level flight, an extensive list of control and gust numerators is presented for each helicopter. The extensive list, given in Table I-5, contains 61 control numerators of type zero through type three and 127 gust numerators of type zero through type four. Based on the analysis reported in Volume Two, these numerators were determined to be of potential value in constructing a large number of closed loop pilot/vehicle transfer function relationships for the general loop structure shown in Fig. I-1.

An abbreviated list of transfer function factors for 36 control numerators, as shown in Table I-6, is presented for each helicopter at a number of flight conditions over a range of airspeeds and vertical velocities. Some cases of altitude, weight, and cg variations are included.

The specific format used to describe transfer function numerators and denominators is shown below. Four elements are involved: the descriptor, the high frequency gain, factored roots (first order then second order), and the low frequency gain. The factored roots are expressed in a short hand form. For a quantity enclosed in parentheses:

$$(a) \triangleq (s + a)$$

For the two quantities enclosed in brackets:

$$[\zeta;\omega] \triangleq [s^2 + 2\zeta\omega s + \omega^2]$$

For example, a transfer function denominator which is denoted by:

DENOMINATOR: (0) (.0636) (5.72) [.0426;.287][.985;1.66][.223;2.63]<.569>

Translates into:

$$\Delta = s(s+.0636)(s+5.72)[s^2+2\times.0426\times.287s+.287^2]$$
$$[s^2+2\times.985\times1.66s+1.66^2][s^2+2\times.223\times2.63s+2.63^2]$$

TABLE I-5

THE EXTENSIVE LIST OF CONTROL AND GUST NUMERATORS

Control Numerators:

Type 0 [illegible]

[illegible]

Type I [illegible]

[illegible]

[illegible]

[illegible]

Type II [illegible]

[illegible]

Type III [illegible]

Gust Numerators:

Type 0 [illegible]

[illegible]

[illegible]

Type I [illegible]

[illegible]

[illegible]

[illegible]

[illegible]

Type II [illegible]

[illegible]

[illegible]

[illegible]

[illegible]

Type III [illegible]

[illegible]

Type IV [illegible]

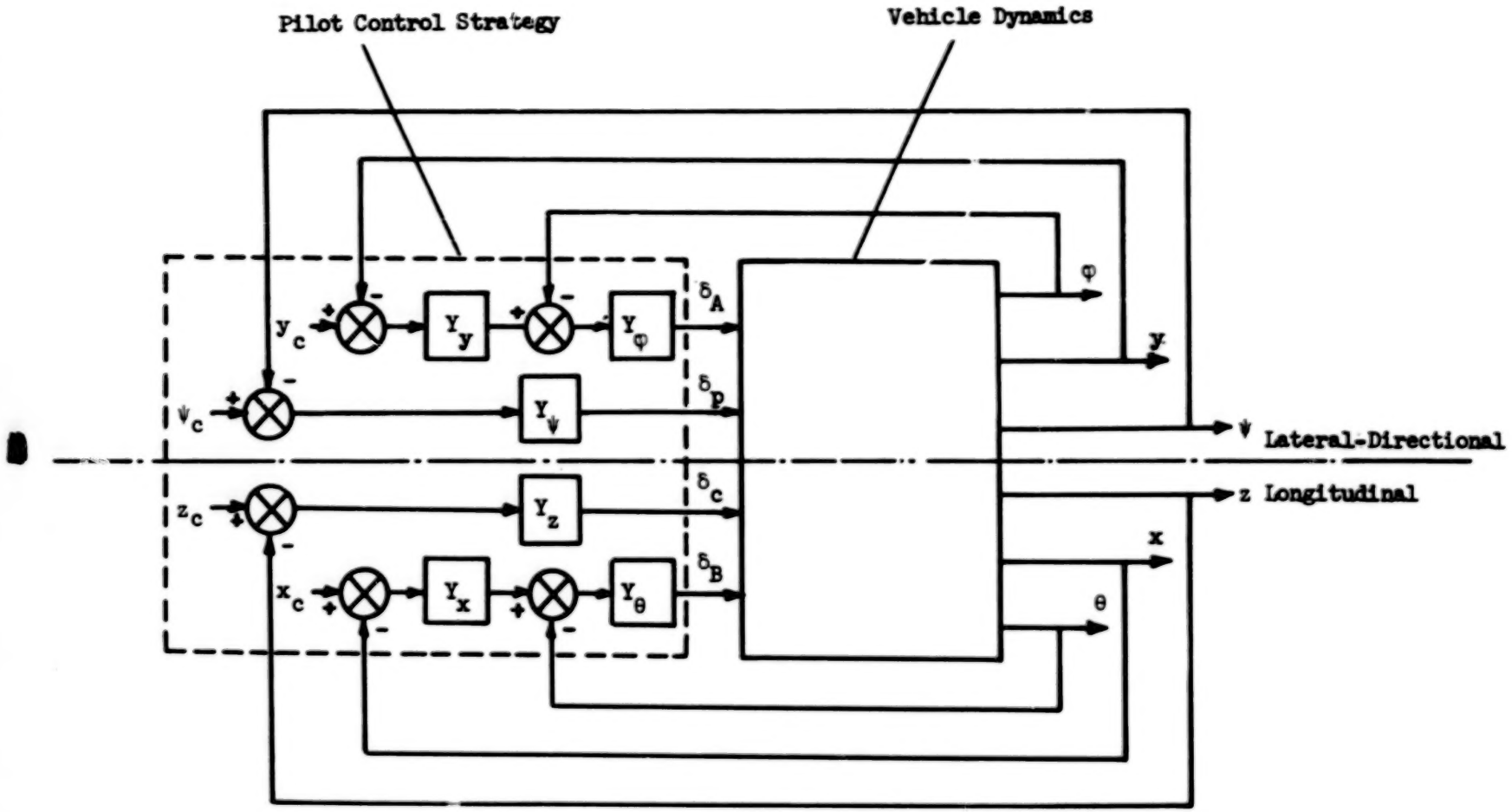

Figure I-1. Assumed Pilot-Vehicle Loop Structure for Low Speed Flight

TABLE I-6

THE ABBREVIATED LIST OF CONTROL NUMERATORS

Type 0 N°_{A}, N°_{B}, N°_{p}, N°_{B}, N°_{A}

Type I $N^{\circ}_{A}{}^{\circ}_{B}$, $N^{\circ}_{A}{}^{\circ}_{p}$, $N^{\circ}_{B}{}^{\circ}_{p}$, $N^{\circ}_{B}{}^{\circ}_{p}$, $N^{\circ}_{p}{}^{\circ}_{B}$, $N^{\circ}_{c}{}^{\circ}_{B}$, $N^{\circ}_{A}{}^{\circ}_{p}$, $N^{\circ}_{p}{}^{\circ}_{A}$, $N^{\circ}_{c}{}^{\circ}_{A}$, $N^{\circ}_{A}{}^{\circ}_{B}$, $N^{\circ}_{B}{}^{\circ}_{A}$
$N^{\circ}_{B}{}^{\circ}_{A}$, $N^{\circ}_{A}{}^{\circ}_{B}$, $N^{\circ}_{c}{}^{\circ}_{A}$, $N^{\circ}_{c}{}^{\circ}_{A}$, $N^{\circ}_{p}{}^{\circ}_{B}$, $N^{\circ}_{B}{}^{\circ}_{A}$

Type II $N^{\circ}_{A}{}^{\circ}_{B}{}^{\circ}_{p}$, $N^{\circ}_{c}{}^{\circ}_{B}{}^{\circ}_{p}$, $N^{\circ}_{c}{}^{\circ}_{A}{}^{\circ}_{p}$, $N^{\circ}_{c}{}^{\circ}_{A}{}^{\circ}_{B}$
$N^{\circ}_{B}{}^{\circ}_{A}{}^{\circ}_{p}$, $N^{\circ}_{A}{}^{\circ}_{B}{}^{\circ}_{p}$, $N^{\circ}_{c}{}^{\circ}_{A}{}^{\circ}_{B}$, $N^{\circ}_{c}{}^{\circ}_{A}{}^{\circ}_{p}$, $N^{\circ}_{c}{}^{\circ}_{A}{}^{\circ}_{B}$, $N^{\circ}_{c}{}^{\circ}_{A}{}^{\circ}_{p}$, $N^{\circ}_{p}{}^{\circ}_{A}{}^{\circ}_{B}$, $N^{\circ}_{B}{}^{\circ}_{A}{}^{\circ}_{p}$

Type III $N^{\circ}_{c}{}^{\circ}_{A}{}^{\circ}_{B}{}^{\circ}_{p}$, $N^{\circ}_{c}{}^{\circ}_{A}{}^{\circ}_{B}{}^{\circ}_{p}$

The high frequency gain in the denominator is always unity, hence is not indicated. The low frequency gain is enclosed in angle brackets at the end of the line. In the above denominator the low frequency gain is .569 (i.e., $.0636 \times 5.72 \times .287^2 \times 1.66^2 \times 2.63^2$).

A numerator is described as above except that it also has a descriptor and non-unity high frequency gain. For example, consider the φ/δ_A control numerator:

CONTROL NUMERATORS:
PHI/DA 1.26 (0) (1.39) (1.86)[.0518;.303][.268;2.59]<2.00>

The descriptor, "PHI/DA" in this case, corresponds to the numerator superscript and subscript combination, i.e.,

$$N^{\varphi}_{\delta_A}$$

The high frequency gain immediately follows, thus:

$$N^{\varphi}_{\delta_A} = 1.26s(s+1.39)(s+1.86)[s^2+2\times.0518\times.303s+.303^2][s^2+2\times.268\times2.59s+2.59^2]$$

The low frequency gain in the above case is 2.00, i.e., $1.26 \times 1.39 \times 1.86 \times .303^2 \times 2.59^2$.

Coupling numerators of higher type are denoted in the same manner except the descriptor contains more elements. The Type I numerator, $N^{\varphi\ \theta}_{\delta_A\delta_B}$ is:

PHI/DA ;THE/DB -.941 (0) (.0218) (.743)[.269;2.66]<-.108>

The Type II numerator, $N^{\psi\ \varphi\ \theta}_{\delta_c\delta_A\delta_B}$ is:

PSI/DC ;PHI/DA ;THE/DB -.459 (.0209) (.0615) (1.04)<-.000611>

and the Type III numerator, $N^{\dot{x}\ \varphi\ \theta\ \psi}_{\delta_c \delta_A \delta_B \delta_p}$ is:

XD/DC ;PHI/DA ;THE/DB ;PSI/DP .414 (-.0246) (.778)<-.00792>

A brief explanation of higher type numerators is given in Appendix B. For a more complete treatment of the subject the reader is referred to Section 3-5 of Ref. 2.

The units of transfer function quantities are:

Radians for φ, θ, and ψ

Feet/second for $\dot{x}$, $\dot{y}$, and $\dot{z}$

Inches for δ_c, δ_B, δ_A, and δ_p.

The units of all factored roots are radians/second.

BLANK PAGE

SECTION II

HUGHES OH-6A

The Hughes OH-6A is a single-turbine, light observation helicopter which has a gross weight of 1225 kg (2700 lb) and seats two pilots plus two passengers. The rotor system consists of a four-bladed, fully articulated main rotor and is powered by a 317 shp Lycoming T63-A-5A turboshaft engine derated to 252.5 shp for takeoff*.

The control system is purely mechanical employing no hydraulic actuation devices. Hence, the control system is reversible with rotor hinge moments fed back to the pilot's controls, however, this aspect is not modeled here. All derivative and transfer function data are for constrained cockpit control deflections (i.e., controls-fixed). Significant control system flexibility effects are also a factor and are included in the data presented as constant control-attenuation coefficients.

Reference 3 is the main source of OH-6A data and contains basic geometric, aerodynamic, and control system descriptions. Rotor system drive characteristics are also given but are not incorporated in the basic data. The stability and control derivatives presented in Ref. 3 were estimated using the manufacturer's helicopter simulation derivative program, SIM8DF. Derivatives for all the flight conditions presented in Ref. 3 have been transcribed to this compilation. Miscellaneous additional information from Refs. 7 and 8 have been added to complete the descriptive data on this page and in Table II-1.

---

* Ref. 7.

TABLE II-1

OH-6A DESCRIPTIVE DATA

MAIN ROTOR

- Blades 4
- Radius 4.013 m (13.167 ft)
- Chord 0.171 m (0.5625 ft)
- Section NACA 0015
- Hub type Articulated
- Twist -8 deg
- Pitch flap coupling (δ_3) Zero
- Shaft tilt 3 deg forward
- Design rpm 485 to 483 (power on), 400 to 514 (power off)*
- Hub location FS 100, WL 83'
- Blade flapping inertia 63.49 kg-m^2 (46.83 slug-ft^2)

TAIL ROTOR

- Blades 2
- Radius 0.648 m (2.125 ft)
- Chord 0.12 m (0.40 ft)
- Twist -8.0 deg
- Gear ratio 6.447
- Hub location FS 282, WL 54.3, BL -11.6

HORIZONTAL STABILIZER

- Area 0.678 m^2 (7.30 ft^2)
- Aspect ratio 3.84
- Center of pressure location FS 280.3, WL 65., BL 28.82
- Dihedral 25 deg
- Incidence 0.8 deg

UPPER VERTICAL STABILIZER

- Area 0.328 m^2 (3.53 ft^2)
- Aspect ratio 4.35
- Center of pressure location FS 288, WL 75

LOWER VERTICAL STABILIZER

- Area 0.139 m^2 (1.5 ft^2)
- Aspect ratio 2.67
- Center of pressure location FS 283, WL 42

---

* From Ref. 8

· Manufacturer's fuselage reference system as shown in Fig. II-1.

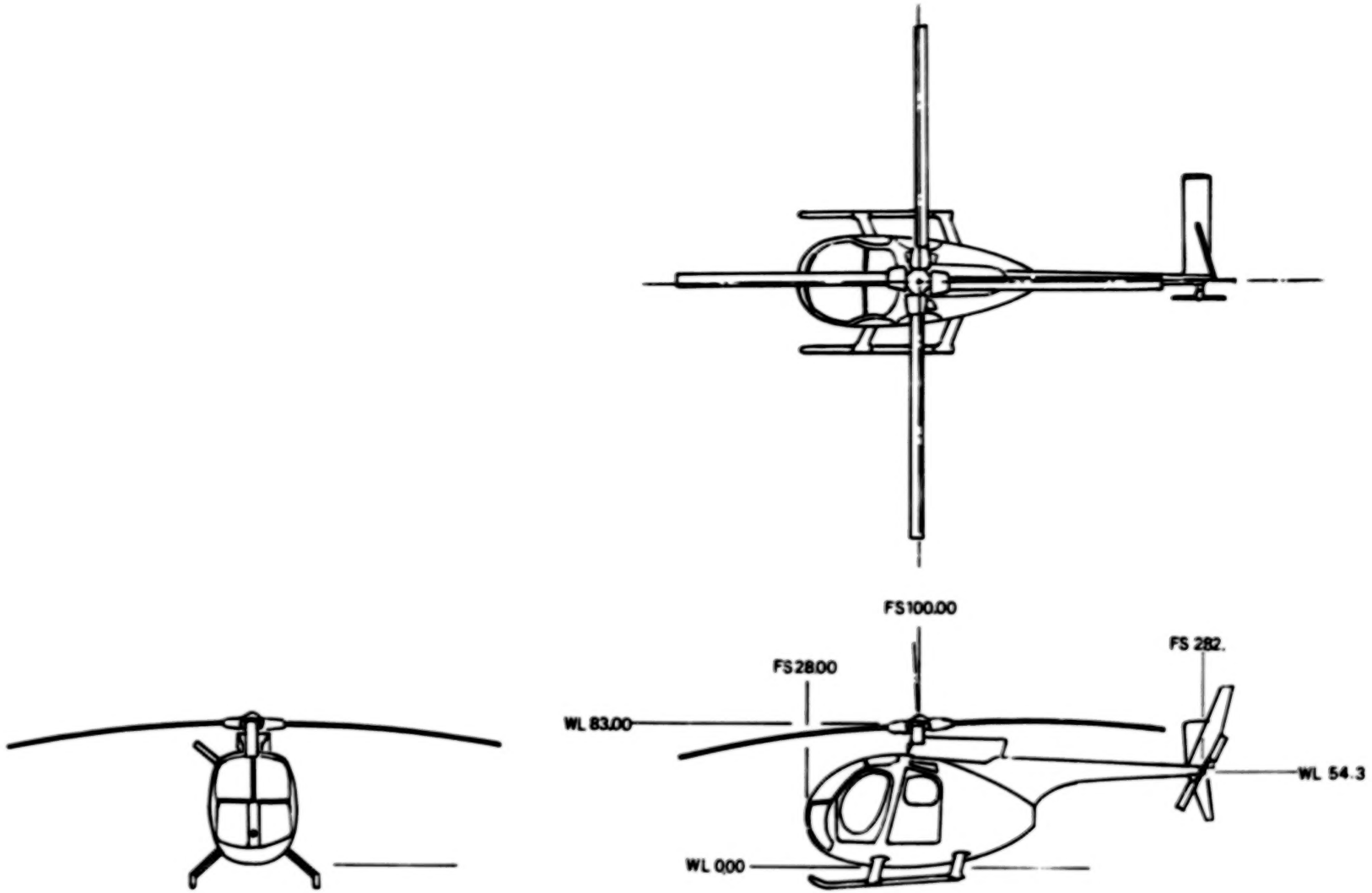

Figure II-1. General Arrangement

a. Block Diagram

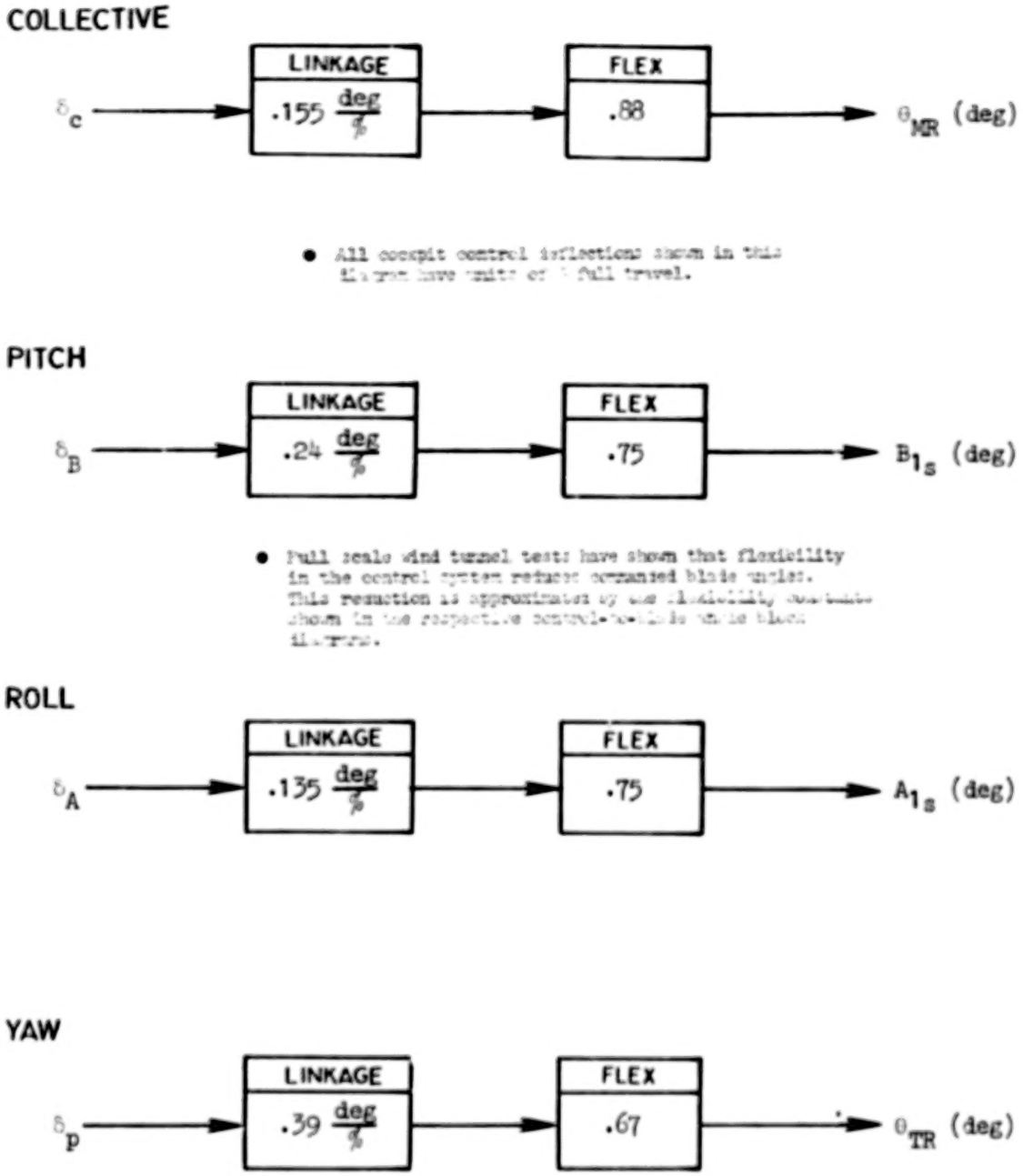

Figure II-2. OH-6A Control System Description

b. Cockpit Controller Characteristics

CONTROLLER	100% FULL TRAVEL cm (in)
Collective, δ_c	22.9 (9)
Longitudinal Cyclic, δ_B	31.8 (12.5)
Lateral Cyclic, δ_A	29.2 (11.5)
Pedal, δ_p	9.3 (3.65)

Figure II-2 (Concluded)

a. Loading Envelope

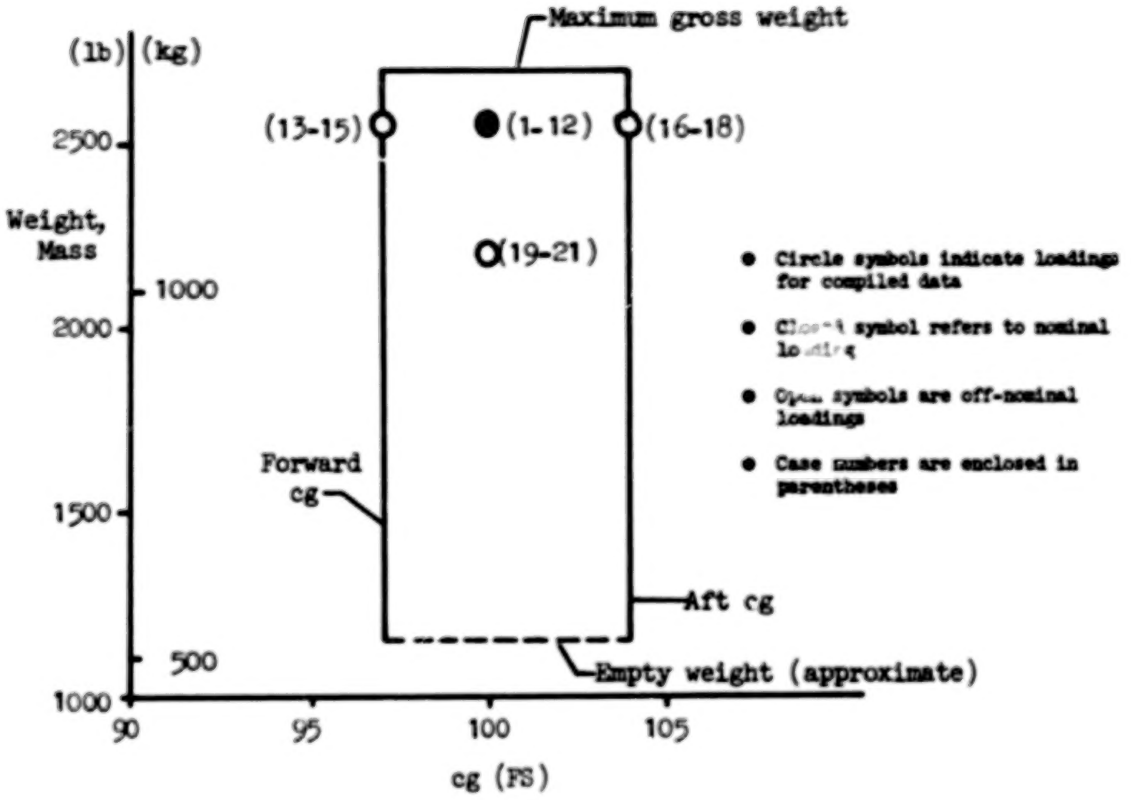

b. Moments of Inertia for Compiled Data

CONDITION	MASS (WEIGHT) kg (lb)	CG FS	CG WL	I_x	I_y	I_z	I_{xz}
				kg-m^2 (slug-ft^2)			
Nominal Weight	1157(2550)	97 to 104	49.6	446(329)	1219(899)	979(722)	128(94.5)
Light Weight	998(2200)	97 to 104	49.6	415(306)	1186(875)	934(689)	127(94.0)

Figure II-3. OH-6A Loading Summary

TABLE II-2

CH-6A INDEX OF FLIGHT CONDITIONS
FOR DERIVATIVES AND TRANSFER FUNCTION FACTORS

CASE	CONDITION	AIRSPEED kt	VERTICAL VELOCITY m/sec (ft/sec)	ALTITUDE m (ft)	MASS (WEIGHT) kg (lb)	cg FS	REPORT PAGE NUMBER	
							DERIVATIVES SI (US)	TRANSFER FUNCTIONS
1	Airspeed Variation	-40	Zero	Sea Level	1157 (2550)	100	26 (35)	44
2		-30						
3		-20						-5
4		Hover					27 (36)	46*
5		20						50*
6		30						
7		40					28 (37)	54
8		60						55*
9		80						59
10		100					29 (38)	60
11		120						61
12		130						62
13	Forward cg	Hover				97	30 (39)	
14		100						
15		130						
16	Aft cg	Hover				104	31 (40)	
17		100						
18		130						
19	Light Weight	Hover			998 (2200)	100	32 (41)	63
20		100						
21		130						
22	Operation at Altitude	Hover		1524 (5000)	1157 (2550)		33 (42)	
23		100						
24		130						
25	Maximum Power Climb	60		Sea Level			34 (43)	64
26	Autorotation	60		Sea Level				65

* Extended list of transfer function factors.

TABLE II-3
OH-6A STABILITY AND CONTROL DERIVATIVES -- SI UNITS
(BODY-FIXED FRL AXIS SYSTEM)

CASE 1 -40 KT LEVEL FLIGHT AT SEA LEVEL 1157 KG MID CG

PHI	THETA	PSI	ALPHA	BETA	GAMMA	θMR	B1S	A1S	θTR
-2.03	3.76	0.00	-176.24	0.13	180.00	12.92	-2.58	-0.01	12.43

XDOT	ZDOT	U0	V0	W0	VT0
-20.58	0.00	-20.53	0.05	-1.35	20.58

	U	W	Q	V	P	R	DC	DB	DA	DP
X	-0.0439	0.0251	0.5530	0.0001	-0.2325	-0.0044	0.0665	0.1115	-0.0040	0.0064
Z	0.1559	-0.6323	-0.0692	-0.0177	0.1166	0.4127	-0.9085	-0.1265	-0.0025	-0.0045
M	0.0459	-0.1590	-2.2755	-0.0378	0.2764	0.2379	-0.1207	-0.3036	0.0143	-0.0123
Y	-0.0069	0.0080	-0.1890	-0.0678	-0.5240	0.1553	-0.0020	0.0091	0.0630	0.1881
L'	0.0036	-0.0617	-1.2755	-0.1425	-5.3893	-0.2253	0.0097	0.0597	0.4956	-0.0302
N'	0.0620	-0.1573	-0.8046	0.2339	-1.1928	-1.1483	0.2306	-0.0207	0.0655	-1.0293

CASE 2 -30 KT LEVEL FLIGHT AT SEA LEVEL 1157 KG MID CG

PHI	THETA	PSI	ALPHA	BETA	GAMMA	θMR	B1S	A1S	θTR
-2.24	2.96	0.00	-177.04	0.12	180.00	13.24	-2.34	-0.03	13.72

XDOT	ZDOT	U0	V0	W0	VT0
-15.43	0.00	-15.41	0.03	-0.80	15.43

	U	W	Q	V	P	R	DC	DB	DA	DP
X	-0.0397	0.0173	0.5150	0.0002	-0.2377	-0.0078	0.0526	0.1078	-0.0043	0.0052
Z	0.1980	-0.5453	0.0449	-0.0232	0.1602	0.4815	-0.8591	-0.0891	0.0084	-0.0037
M	0.0514	-0.1172	-2.1514	-0.0276	0.2999	0.1740	-0.0903	-0.2972	0.0144	-0.0069
Y	-0.0060	0.0049	-0.2038	-0.0566	-0.4961	0.1351	-0.0016	0.0094	0.0628	0.1796
L'	0.0089	-0.0455	-1.2462	-0.1430	-5.2968	-0.2487	0.0251	0.0703	0.4954	-0.0281
N'	0.0582	-0.1096	-0.6168	0.1692	-1.1801	-1.0321	0.2620	-0.0109	0.0664	-0.9832

CASE 3 -20 KT LEVEL FLIGHT AT SEA LEVEL 1157 KG MID CG

PHI	THETA	PSI	ALPHA	BETA	GAMMA	θMR	B1S	A1S	θTR
-2.58	2.39	0.00	-177.62	0.11	180.00	13.85	-2.04	-0.10	15.43

XDOT	ZDOT	U0	V0	W0	VT0
-10.29	0.00	-10.28	0.02	-0.43	10.29

	U	W	Q	V	P	R	DC	DB	DA	DP
X	-0.0346	0.0109	0.4647	0.0019	-0.2435	-0.0036	0.0431	0.1058	-0.0039	0.0043
Z	0.1984	-0.4344	-0.0392	-0.0492	0.0332	0.3121	-0.8618	-0.0746	-0.0056	-0.0029
M	0.0502	-0.0787	-2.0047	-0.0184	0.3334	0.1543	-0.0678	-0.2927	0.0152	-0.0003
Y	-0.0045	0.0055	-0.2108	-0.0467	-0.4466	0.1450	-0.0011	0.0101	0.0641	0.1987
L'	0.0095	-0.0300	-1.1905	-0.1414	-5.1219	-0.2131	0.0378	0.0768	0.5018	-0.0306
N'	0.0438	-0.0780	-0.5092	0.1095	-1.2004	-1.0661	0.2952	-0.0099	0.0630	-1.0979

MICROFILMED FROM
BEST AVAILABLE COPY

TABLE II-3 CONTINUED
OH-6A STABILITY AND CONTROL DERIVATIVES -- SI UNITS
(BODY-FIXED FRL AXIS SYSTEM)

CASE 4 0 KT LEVEL FLIGHT AT SEA LEVEL 1157 KG MID CG

PHI	THETA	PSI	ALPHA	BETA	GAMMA	θMR	B1S	A1S	θTR
-3.05	1.66	0.00	1.65	-0.09	0.00	14.70	-1.21	-0.22	17.33

XDOT	ZDOT	U0	V0	W0	VT0
0.00	0.00	0.00	0.00	0.00	0.00

	U	W	Q	V	P	R	DC	DB	DA	DP
X	-0.0257	0.0113	0.3972	0.0004	-0.2494	-0.0185	0.0260	0.1032	-0.0034	-0.0039
Z	-0.0422	-0.3404	0.0050	-0.0440	0.0177	0.4495	-0.8812	-0.0019	0.0013	-0.0046
M	0.0414	-0.0196	-1.7645	-0.0086	0.3763	0.0719	-0.0309	-0.2916	0.0138	-0.0038
Y	0.0158	-0.0194	-0.2573	-0.0435	-0.4104	0.1045	-0.0069	0.0046	0.0617	0.1841
L'	0.0010	-0.0064	-1.1360	-0.1516	-4.9198	-0.2873	0.0475	0.0738	0.5037	-0.0308
N'	-0.0861	0.1018	-0.1724	-0.0054	-1.0748	-0.8645	0.3743	0.0194	0.0780	-1.0109

CASE 5 20 KT LEVEL FLIGHT AT SEA LEVEL 1157 KG MID CG

PHI	THETA	PSI	ALPHA	BETA	GAMMA	θMR	B1S	A1S	θTR
-2.45	1.52	0.00	1.52	-0.06	0.00	13.84	-0.03	-0.36	14.63

XDOT	ZDOT	U0	V0	W0	VT0
10.29	0.00	10.29	-0.01	0.27	10.29

	U	W	Q	V	P	R	DC	DB	DA	DP
X	-0.0167	0.0216	0.4624	0.0024	-0.2375	-0.0301	0.0108	0.0996	-0.0001	-0.0060
Z	-0.1896	-0.4337	0.0483	-0.0370	-0.0006	0.4654	-0.8384	0.0841	0.0125	-0.0002
M	0.0511	-0.0099	-1.8793	-0.0061	0.3497	0.0954	0.0226	-0.2900	0.0140	0.0108
Y	0.0080	-0.0061	-0.2430	-0.0490	-0.4814	0.1474	-0.0011	0.0073	0.0625	0.1865
L'	0.0018	-0.0224	-1.1404	-0.1461	-5.1712	-0.2623	0.0520	0.0711	0.4992	-0.0276
N'	-0.0702	-0.0249	-0.1569	0.0825	-1.1071	-1.1038	0.2934	0.0138	0.0699	-1.0245

CASE 6 30 KT LEVEL FLIGHT AT SEA LEVEL 1157 KG MID CG

PHI	THETA	PSI	ALPHA	BETA	GAMMA	θMR	B1S	A1S	θTR
-2.00	1.68	0.00	1.68	-0.06	0.00	13.18	0.53	-0.41	12.54

XDOT	ZDOT	U0	V0	W0	VT0
15.43	0.00	15.43	-0.02	0.45	15.43

	U	W	Q	V	P	R	DC	DB	DA	DP
X	-0.0204	0.0180	0.5056	0.0038	-0.2125	-0.0516	0.0029	0.0983	-0.0043	-0.0055
Z	-0.1420	-0.5473	-0.0650	-0.0313	-0.0783	0.3827	-0.8753	0.1034	0.0025	0.0013
M	0.0537	-0.0019	-2.0215	-0.0147	0.3529	0.0424	0.0243	-0.2860	0.0154	0.0146
Y	0.0054	-0.0101	-0.2555	-0.0581	-0.5404	0.1439	-0.0058	0.0055	0.0605	0.1650
L'	0.0002	-0.0362	-1.1554	-0.1862	-5.3039	-0.2649	0.0420	0.0770	0.4993	-0.0235
N'	-0.0576	-0.0440	-0.0275	0.1251	-1.0852	-1.0691	0.2794	0.0329	0.0782	-0.9061

TABLE II-3 CONTINUED
OH-6A STABILITY AND CONTROL DERIVATIVES -- SI UNITS
(BODY-FIXED FRL AXIS SYSTEM)

CASE 7 40 KT LEVEL FLIGHT AT SEA LEVEL 1157 KG MID CG

PHI	THETA	PSI	ALPHA	BETA	GAMMA	θMR	B1S	A1S	θTR
-1.74	1.48	0.00	1.48	-0.04	0.00	12.79	0.96	-0.43	11.25

XDOT	ZDOT	U0	V0	W0	VT0
20.58	0.00	20.57	-0.02	0.53	20.58

	U	W	Q	V	P	R	DC	DB	DA	DP
X	-0.0270	0.0125	0.5189	0.0008	-0.2285	-0.0169	0.0058	0.0957	-0.0046	-0.0058
Z	-0.0941	-0.6299	-0.1564	-0.0234	-0.1242	0.4415	-0.9069	0.1348	0.0058	0.0022
M	0.0426	-0.0113	-2.2421	-0.0356	0.2952	0.1843	0.0621	-0.2878	0.0152	0.0168
Y	0.0041	-0.0120	-0.2720	-0.0679	-0.5880	0.1457	-0.0037	0.0055	0.0602	0.1613
L'	-0.0063	-0.0571	-1.2325	-0.1571	-5.4483	-0.2164	0.0497	0.0771	0.4976	-0.0224
N'	-0.0468	-0.0712	0.1582	0.1654	-1.0122	-1.1024	0.2285	0.0436	0.0785	-0.8862

CASE 8 60 KT LEVEL FLIGHT AT SEA LEVEL 1157 KG MID CG

PHI	THETA	PSI	ALPHA	BETA	GAMMA	θMR	B1S	A1S	θTR
-1.54	0.58	0.00	0.58	-0.02	0.00	12.59	1.79	-0.48	10.08

XDOT	ZDOT	U0	V0	W0	VT0
30.87	0.00	30.87	-0.01	0.31	30.87

	U	W	Q	V	P	R	DC	DB	DA	DP
X	-0.0314	0.0107	0.5506	0.0015	-0.2234	-0.0156	-0.0057	0.0930	-0.0044	-0.0072
Z	-0.0371	-0.7150	-0.2152	-0.0210	-0.2914	0.4056	-0.9955	0.2211	0.0032	0.0052
M	0.0345	-0.0130	-2.4843	-0.0611	0.2077	0.2636	0.1083	-0.2938	0.0144	0.0314
Y	0.0009	-0.0186	-0.3047	-0.0836	-0.5919	0.2062	-0.0039	0.0062	0.0602	0.1912
L'	-0.0083	-0.0844	-1.3056	-0.1642	-5.4853	-0.1582	0.0477	0.0729	0.4941	-0.0323
N'	-0.0240	-0.0800	0.5060	0.2120	-1.1022	-1.4412	0.1822	0.0566	0.0741	-1.0514

CASE 9 80 KT LEVEL FLIGHT AT SEA LEVEL 1157 KG MID CG

PHI	THETA	PSI	ALPHA	BETA	GAMMA	θMR	B1S	A1S	θTR
-1.60	-0.77	0.00	-0.77	0.02	0.00	13.02	2.57	-0.60	9.85

XDOT	ZDOT	U0	V0	W0	VT0
41.16	0.00	41.15	0.02	-0.55	41.16

	U	W	Q	V	P	R	DC	DB	DA	DP
X	-0.0379	0.0064	0.5333	0.0011	-0.2203	-0.0195	-0.0210	0.0899	-0.0049	-0.0113
Z	-0.0126	-0.7655	-0.2194	-0.0243	-0.3605	0.4654	-1.0715	0.1185	0.0033	0.0054
M	0.0148	-0.0086	-2.6776	-0.0746	0.2094	0.3948	0.1571	-0.2969	0.0161	0.0285
Y	0.0018	-0.0219	-0.2411	-0.0994	-0.5972	0.2441	-0.0035	0.0098	0.0621	0.2149
L'	-0.0036	-0.1019	-1.1420	-0.1774	-5.4142	-0.0715	0.0563	0.0790	0.4982	-0.0276
N'	-0.0219	-0.5497	0.5444	0.2508	-0.9747	-1.3727	0.1657	0.0553	0.0646	-1.1815

TABLE II-3 CONTINUED
OH-6A STABILITY AND CONTROL DERIVATIVES -- SI UNITS
(BODY-FIXED FRL AXIS SYSTEM)

CASE 10 100 KT LEVEL FLIGHT AT SEA LEVEL 1157 KG MID CG

PHI	THETA	PSI	ALPHA	BETA	GAMMA	θMR	B1S	A1S	θTR
-1.88	-2.14	0.00	-2.14	0.07	0.00	14.03	3.89	-0.86	10.18

XDOT	ZDOT	U0	V0	W0	VT0
51.44	0.00	51.41	0.06	-1.92	51.44

	U	W	Q	V	P	R	DC	DB	DA	DP
X	-0.0437	0.0081	0.4829	0.0015	-0.2237	-0.0157	-0.0263	0.0880	-0.0041	-0.0148
Z	0.0023	-0.7977	-0.2723	-0.0374	-0.4821	0.4861	-1.1383	0.4017	0.0005	0.0110
M	0.0344	-0.0093	-2.8275	-0.0979	0.1469	0.4617	0.1964	-0.3057	0.0155	0.0584
Y	0.0021	-0.0325	-0.3635	-0.1174	-0.5489	0.3137	-0.0121	0.0080	0.0611	0.2196
L'	-0.0029	-0.1238	-1.4309	-0.2024	-5.2565	-0.0058	0.0560	0.0765	0.5005	-0.0416
N'	-0.0243	-0.0125	1.0475	0.2926	-0.9802	-2.0187	0.2357	0.0676	0.0730	-1.2102

CASE 11 120 KT LEVEL FLIGHT AT SEA LEVEL 1157 KG MID CG

PHI	THETA	PSI	ALPHA	BETA	GAMMA	θMR	B1S	A1S	θTR
-2.34	-3.94	0.00	-3.94	0.16	0.00	15.64	5.41	-1.32	10.81

XDOT	ZDOT	U0	V0	W0	VT0
61.73	0.00	61.59	0.17	-4.24	61.73

	U	W	Q	V	P	R	DC	DB	DA	DP
X	-0.0536	0.0075	0.3698	0.0003	-0.2433	-0.0227	-0.0346	0.0850	-0.0041	-0.0260
Z	0.0127	-0.8050	-0.2307	-0.0444	-0.5336	0.5800	-1.1526	0.4907	0.0039	0.0104
M	0.0430	-0.0045	-2.9488	-0.1078	0.1673	0.5662	0.2473	-0.3147	0.0168	0.0511
Y	0.0026	-0.0421	-0.3244	-0.1344	-0.4936	0.3848	-0.0245	0.0123	0.0628	0.2360
L'	0.0010	-0.1494	-1.5519	-0.2348	-5.0022	0.0595	0.0479	0.0747	0.5054	-0.0281
N'	-0.0247	0.0700	0.7900	0.3239	-0.8117	-2.4360	0.3615	0.0332	0.0711	-1.3019

CASE 12 130 KT LEVEL FLIGHT AT SEA LEVEL 1157 KG MID CG

PHI	THETA	PSI	ALPHA	BETA	GAMMA	θMR	B1S	A1S	θTR
-2.66	-4.80	0.00	-4.80	0.22	0.00	16.70	6.48	-1.61	11.46

XDOT	ZDOT	U0	V0	W0	VT0
66.88	0.00	66.64	0.26	-5.59	66.88

	U	W	Q	V	P	R	DC	DB	DA	DP
X	-0.0570	0.0138	0.2905	0.0001	-0.2578	-0.0240	-0.0353	0.0827	-0.0041	-0.0317
Z	0.0178	-0.8096	-0.3092	-0.0485	-0.5825	0.6244	-1.1667	0.5212	0.0041	0.0141
M	0.0498	-0.0065	-2.9912	-0.1161	0.1693	0.6934	0.2652	-0.3239	0.0172	0.0662
Y	0.0036	-0.0488	-0.3196	-0.1438	-0.4203	0.4176	-0.0340	0.0163	0.0640	0.2320
L'	0.0047	-0.1655	-1.6260	-0.2542	-4.8062	0.0911	0.0359	0.0698	0.5089	-0.0257
N'	-0.0301	0.1340	0.6085	0.3403	-0.8152	-2.5430	0.4704	-0.0111	0.0706	-1.2815

TABLE II-3 CONTINUED
OH-6A STABILITY AND CONTROL DERIVATIVES -- SI UNITS
(BODY-FIXED FRL AXIS SYSTEM)

CASE 13 0 KT LEVEL FLIGHT AT SEA LEVEL 1157 KG FWD CG

PHI	THETA	PSI	ALPHA	BETA	GAMMA	θMR	B1S	A1S	θTR
-3.05	0.20	0.00	0.20	-0.01	0.00	14.70	-2.58	-0.10	17.16

XDOT	ZDOT	U0	V0	W0	VT0
0.00	0.00	0.00	0.00	0.00	0.00

	U	W	Q	V	P	R	DC	DB	DA	DP
X	-0.0267	0.0036	0.3974	-0.0008	-0.2507	-0.0060	0.0030	0.1028	-0.0035	-0.0035
Z	-0.0555	-0.3449	0.0005	-0.0457	0.0672	0.4865	-0.8749	0.0039	0.0056	-0.0045
M	0.0387	-0.0358	-1.7601	-0.0103	0.3867	0.0866	-0.0655	-0.2931	0.0145	-0.0041
Y	0.0156	-0.0197	-0.2599	-0.0437	-0.4110	0.1063	-0.0072	0.0042	0.0616	0.1822
L'	-0.0004	-0.0079	-1.0767	-0.1518	-4.8978	-0.2795	0.0476	0.0721	0.5024	-0.0353
N'	-0.0887	0.1026	0.2259	-0.0027	-1.0287	-0.8760	0.3758	0.0200	0.0735	-1.0176

CASE 14 100 KT LEVEL FLIGHT AT SEA LEVEL 1157 KG FWD CG

PHI	THETA	PSI	ALPHA	BETA	GAMMA	θMR	B1S	A1S	θTR
-1.78	-3.54	0.00	-3.54	0.11	0.00	14.05	2.54	-0.84	9.80

XDOT	ZDOT	U0	V0	W0	VT0
51.44	0.00	51.35	0.10	-3.18	51.44

	U	W	Q	V	P	R	DC	DB	DA	DP
X	-0.0439	-0.0095	0.4713	0.0004	-0.2325	0.0004	-0.0532	0.0986	-0.0036	-0.0161
Z	-0.0160	-0.7995	-0.3371	-0.0369	-0.4688	0.4898	-1.1408	0.3967	-0.0010	0.0061
M	0.0349	-0.0478	-2.8644	-0.0958	0.1390	0.4761	0.1434	-0.2918	0.0132	0.0307
Y	0.0015	-0.0328	-0.3100	-0.1173	-0.5733	0.3351	-0.0137	0.0097	0.0616	0.2283
L'	-0.0051	-0.1357	-1.4157	-0.2060	-5.2860	-0.0495	0.0405	0.0700	0.4942	-0.0363
N'	-0.0266	-0.0204	1.1367	0.2999	-0.8335	-2.1766	0.2317	0.0599	0.0641	-1.2777

CASE 15 130 KT LEVEL FLIGHT AT SEA LEVEL 1157 KG FWD CG

PHI	THETA	PSI	ALPHA	BETA	GAMMA	θMR	B1S	A1S	θTR
-2.60	-6.22	0.00	-6.22	0.29	0.00	16.96	5.56	-1.69	11.15

XDOT	ZDOT	U0	V0	W0	VT0
66.89	0.00	66.49	0.33	-7.24	66.88

	U	W	Q	V	P	R	DC	DB	DA	DP
X	-0.0585	0.0136	0.2750	-0.0012	-0.2710	-0.0079	-0.0542	0.0943	-0.0034	-0.0303
Z	0.0054	-0.8085	-0.3885	-0.0497	-0.5660	0.6421	-1.1625	0.5154	0.0041	0.0104
M	0.0555	-0.0503	-1.0149	-0.1177	0.1444	0.6364	0.2034	-0.3016	0.0164	0.0495
Y	0.0042	-0.0514	-0.3185	-0.1450	-0.4086	0.4399	-0.0169	0.0181	0.0648	0.2406
L'	0.0085	-0.1700	-1.5811	-0.2536	-4.7637	0.3051	0.0117	0.0754	0.5102	-0.0164
N'	-0.0363	0.1599	0.8734	0.3572	-0.7804	-2.7851	0.5083	-0.0176	0.0655	-1.3512

MICROFILMED FROM
BEST AVAILABLE COPY

TABLE II-3 CONTINUED
OH-6A STABILITY AND CONTROL DERIVATIVES -- SI UNITS
(BODY-FIXED FRL AXIS SYSTEM)

CASE 16 0 KT LEVEL FLIGHT AT SEA LEVEL 1157 KG APT CG

PHI	THETA	PSI	ALPHA	BETA	GAMMA	OMR	B1S	A1S	OTR
-3.08	3.63	0.00	3.59	-0.19	0.00	14.73	0.59	-0.38	17.46

XDOT	ZDOT	UO	VO	WO	VTO
0.00	0.00	0.00	0.00	0.00	0.00

	U	W	Q	V	P	R	DC	DB	DA	DP
X	-0.0258	0.0218	0.3940	0.0026	-0.2500	-0.0372	0.0560	0.1037	-0.0035	-0.0039
Z	-0.0285	-0.3372	0.0380	-0.0587	-0.0208	0.4296	-0.8836	-0.0042	-0.0009	-0.0043
M	0.0483	0.0003	-1.7584	-0.0051	0.3822	0.0681	0.0187	-0.2909	0.0185	-0.0018
Y	0.0159	-0.0187	-0.2577	-0.0428	-0.0122	0.1009	-0.0066	0.0048	0.0620	0.1847
L'	0.0020	-0.0048	-1.2357	-0.1531	-0.9471	-0.2927	0.0490	0.0740	0.5068	-0.0240
N'	-0.0838	0.0998	-0.6967	-0.0158	-1.1246	-0.8418	0.3743	0.0198	0.0851	-0.9910

CASE 17 100 KT LEVEL FLIGHT AT SEA LEVEL 1157 KG APT CG

PHI	THETA	PSI	ALPHA	BETA	GAMMA	OMR	B1S	A1S	OTR
-1.97	-0.59	0.00	-0.59	0.02	0.00	13.96	5.33	-0.90	10.63

XDOT	ZDOT	UO	VO	WO	VTO
51.44	0.00	51.44	0.02	-0.53	51.44

	U	W	Q	V	P	R	DC	DB	DA	DP
X	-0.0487	0.0250	0.4700	0.0021	-0.2127	-0.0396	0.0026	0.0755	-0.0047	-0.0179
Z	0.0215	-0.7961	-0.1878	-0.0351	-0.4834	0.4846	-1.1368	0.0066	0.0019	0.0081
M	0.0296	0.0463	-2.7721	-0.0885	0.2130	0.4646	0.2733	-0.3280	0.0173	0.0398
Y	0.0015	-0.0281	-0.3061	-0.1159	-0.5668	0.3183	-0.0097	0.0076	0.0611	0.2273
L'	-0.0043	-0.1161	-1.5136	-0.2048	-5.2548	-0.0079	0.0657	0.0735	0.5020	-0.0204
N'	-0.0173	-0.0296	0.2889	0.2720	-0.9133	-1.9918	0.2288	0.0628	0.0773	-1.2234

CASE 18 130 KT LEVEL FLIGHT AT SEA LEVEL 1157 KG APT CG

PHI	THETA	PSI	ALPHA	BETA	GAMMA	OMR	B1S	A1S	OTR
-2.85	-3.37	0.00	-3.37	0.17	0.00	16.69	7.94	-1.56	12.23

XDOT	ZDOT	UO	VO	WO	VTO
66.88	0.00	66.76	0.20	-3.93	66.88

	U	W	Q	V	P	R	DC	DP	DA	DP
X	-0.0406	0.0297	0.2918	0.0026	-0.2326	-0.0419	-0.0019	0.0678	-0.0038	-0.0291
Z	0.0166	-0.8101	-0.2399	-0.0487	-0.6206	0.4003	-1.1709	0.5236	0.0038	0.0166
M	0.0406	0.0479	-2.9547	-0.1139	0.1900	0.4635	0.1390	-0.3547	0.0157	0.0811
Y	0.0040	-0.0453	-0.3109	-0.1421	-0.6099	0.4124	-0.0101	0.0186	0.0618	0.2319
L'	0.0020	-0.1541	-1.7041	-0.2571	-6.7811	0.0045	0.0506	0.0621	0.5108	-0.0158
N'	-0.0101	0.1257	0.1047	0.1174	-0.8624	-2.5711	0.4621	-0.0151	0.0745	-1.2512

TABLE II-3 CONTINUED
OH-6A STABILITY AND CONTROL DERIVATIVES -- SI UNITS
(BODY-FIXED FRL AXIS SYSTEM)

CASE 19 0 KT LEVEL FLIGHT AT SEA LEVEL 998 KG MID CG

PHI	THETA	PSI	ALPHA	BETA	GAMMA	θMR	B1S	A1S	θTR
-3.01	1.77	0.00	1.76	-0.09	0.00	13.78	-1.13	-0.19	15.95

XDOT	ZDOT	U0	V0	W0	VT0
0.00	0.00	0.00	0.00	0.00	0.00

	U	W	Q	V	P	R	DC	DB	DA	DP
X	-0.0240	0.0137	0.3728	0.0012	-0.2506	-0.0199	0.0313	0.1032	-0.0031	-0.0046
Z	-0.0595	-0.3877	-0.0203	-0.0655	0.0004	0.4218	-1.0094	0.0022	-0.0018	-0.0038
M	0.0340	-0.0201	-1.7099	-0.0107	0.3481	0.0635	-0.0332	-0.2832	0.0131	-0.0011
Y	0.0165	-0.0210	-0.2611	-0.0432	-0.3902	0.1173	-0.0073	0.0034	0.0614	0.2143
L'	-0.0014	-0.0056	-1.1067	-0.1330	-5.0207	-0.2977	0.0537	0.0733	0.5128	-0.0460
N'	-0.0620	0.1046	-0.1862	-0.0014	-1.1131	-0.8438	0.3563	0.0223	0.0839	-1.0661

CASE 20 100 KT LEVEL FLIGHT AT SEA LEVEL 998 KG MID CG

PHI	THETA	PSI	ALPHA	BETA	GAMMA	θMR	B1S	A1S	θTR
-2.06	-2.85	0.00	-2.86	0.10	0.00	13.46	3.48	-0.85	9.69

XDOT	ZDOT	U0	V0	W0	VT0
51.44	0.00	51.38	0.09	-2.57	51.44

	U	W	Q	V	P	R	DC	DB	DA	DP
X	-0.0483	0.0122	0.4187	0.0004	-0.2309	-0.0190	-0.0251	0.0834	-0.0045	-0.0181
Z	0.0093	-0.9175	-0.2807	-0.0375	-0.5157	0.5583	-1.3274	0.4720	0.0041	0.0066
M	0.0314	-0.0149	-2.7468	-0.0939	0.1533	0.4914	0.1927	-0.2931	0.0164	0.0303
Y	0.0023	-0.0340	-0.3251	-0.1313	-0.5492	0.3892	-0.0109	0.0081	0.0621	0.2648
L'	-0.0010	-0.1270	-1.4729	-0.1956	-5.3111	-0.0091	0.0641	0.0734	0.5116	-0.0499
N'	-0.0201	-0.0122	0.6236	0.3024	-0.9092	-2.1983	0.2065	0.0493	0.0749	-1.3199

CASE 21 130 KT LEVEL FLIGHT AT SEA LEVEL 998 KG MID CG

PHI	THETA	PSI	ALPHA	BETA	GAMMA	θMR	B1S	A1S	θTR
-2.98	-6.01	0.00	-6.01	0.31	0.00	16.62	6.50	-1.74	10.72

XDOT	ZDOT	U0	V0	W0	VT0
66.88	0.00	66.51	0.36	-7.00	66.88

	U	W	Q	V	P	R	DC	DB	DA	DP
X	-0.0636	0.0376	0.1891	-0.0007	-0.2595	-0.0171	-0.0203	0.0759	-0.0029	-0.0317
Z	0.0261	-0.9657	-0.2654	-0.0596	-0.6830	0.6921	-1.4007	0.6150	0.0029	0.0118
M	0.0472	-0.0215	-2.8787	-0.1147	0.1318	0.6142	0.2425	-0.3084	0.0153	0.0485
Y	0.0049	-0.0551	-0.3779	-0.1646	-0.3841	0.4987	-0.0354	0.0131	0.0651	0.2781
L'	0.0089	-0.1604	-1.7526	-0.2542	-4.7659	0.3934	0.0611	0.0615	0.5249	-0.0499
N'	-0.0273	0.1624	0.5244	0.3627	-0.7971	-2.7441	0.4607	-0.0176	0.0789	-1.3992

TABLE II-3 CONTINUED
OH-6A STABILITY AND CONTROL DERIVATIVES -- SI UNITS
(BODY-FIXED FRL AXIS SYSTEM)

CASE 22   0 KT   LEVEL FLIGHT   1524 M   1157 KG   MID CG

PHI	THETA	PSI	ALPHA	BETA	GAMMA	OMR	B1S	A1S	OTR
-3.18	1.66	0.00	1.65	-0.09	0.00	15.75	-1.21	-0.22	18.99

XDOT	ZDOT	U0	V0	W0	VT0
0.00	0.00	0.00	0.00	0.00	0.00

	U	W	Q	V	P	R	DC	DB	DA	DP
X	-0.0272	0.0101	0.4634	0.0010	-0.2394	-0.0193	0.0227	0.1029	-0.0039	-0.0047
Z	-0.0334	-0.3001	0.0393	-0.0425	0.0942	0.4704	-0.7686	0.0055	0.0039	-0.0032
M	0.0455	-0.0176	-2.0493	-0.0394	0.3207	0.0793	-0.9270	-0.2910	0.0153	0.0049
Y	0.0140	-0.0182	-0.2391	-0.0432	-0.4731	0.0672	-0.0055	0.0063	0.0618	0.1631
L'	-0.0057	-0.0067	-0.9629	-0.1712	-5.7392	-0.3433	0.0420	0.0805	0.4981	-0.0267
N'	-0.0814	0.0912	-0.1537	-0.0200	-1.2085	-0.8117	0.3602	0.0158	0.0745	-0.8962

CASE 23   100 KT   LEVEL FLIGHT   1524 M   1157 KG   MID CG

PHI	THETA	PSI	ALPHA	BETA	GAMMA	OMR	B1S	A1S	OTR
-1.94	-1.69	0.00	-1.69	0.05	0.00	14.77	4.18	-0.80	10.90

XDOT	ZDOT	U0	V0	W0	VT0
51.44	0.00	51.42	0.05	-1.52	51.44

	U	W	Q	V	P	R	DC	DB	DA	DP
X	-0.0417	0.0043	0.5501	0.0011	-0.2185	-0.0251	-0.0277	0.0908	-0.0054	-0.0165
Z	0.0027	-0.6574	-0.2025	-0.0261	-0.3337	0.4899	-0.9256	0.1428	0.0039	0.0068
M	0.0406	0.0100	-2.9885	-0.0783	0.1738	0.4456	0.2063	-0.3054	0.0203	0.0345
Y	0.0010	-0.0291	-0.2665	-0.1038	-0.6239	0.2758	-0.0157	0.0101	0.0607	0.1971
L'	-0.0043	-0.1156	-1.1353	-0.1988	-5.9831	-0.0817	0.0404	0.0925	0.4962	-0.0251
N'	-0.0217	0.0118	0.7692	0.2458	-0.9537	-1.8553	0.3204	0.0610	0.0707	-1.0857

CASE 24   130 KT   LEVEL FLIGHT   1524 M   1157 KG   MID CG

PHI	THETA	PSI	ALPHA	BETA	GAMMA	OMR	B1S	A1S	OTR
-2.74	-4.06	0.00	-4.06	0.19	0.00	17.32	6.90	-1.42	12.95

XDOT	ZDOT	U0	V0	W0	VT0
66.88	0.00	66.71	0.21	-4.71	66.88

	U	W	Q	V	P	R	DC	DB	DA	DP
X	-0.0551	0.0167	0.1089	0.0339	-0.2416	-0.0299	-0.0226	0.0910	-0.0040	-0.0247
Z	0.0165	-0.6755	-0.4624	-0.0171	-0.4367	0.5510	-0.9595	0.4342	0.0049	0.0179
M	0.0500	-0.0054	-1.2217	-0.0335	0.1210	0.5472	0.2512	-0.1185	0.0146	0.0911
Y	0.0022	-0.0411	-0.2638	-0.1250	-0.6648	0.1621	-0.0290	0.0157	0.0611	0.1961
L'	-0.0029	-0.1896	-1.2957	-0.2190	[illegible]	[illegible]	0.0101	[illegible]	0.4986	-0.0171
N'	-0.0234	0.1063	0.5106	0.2845	[illegible]	[illegible]	[illegible]	[illegible]	[illegible]	-1.0829

TABLE II-3 CONCLUDED
OH-6A STABILITY AND CONTROL DERIVATIVES -- SI UNITS
(BODY-FIXED FRL AXIS SYSTEM)

CASE 25 60 KT 6 M/S SEA LEVEL 1157 KG MID CG

PHI	THETA	PSI	ALPHA	BETA	GAMMA	OMR	RIS	AIS	OTR
-2.63	0.62	0.00	-9.96	0.05	10.58	15.19	2.44	-0.97	12.71

XDOT	ZDOT	U0	V0	W0	VTO
30.34	-5.67	30.80	0.28	-5.34	30.87

	U	V	Q	T	P	R	DC	DB	DA	DP
X	-0.0308	0.0185	0.3630	0.0001	-0.2544	-0.0120	0.3026	0.0958	-0.0037	-0.0128
Z	-0.0245	-0.7023	-3.1539	-0.0227	-0.2821	3.4923	-0.9997	0.2170	0.0041	0.0033
M	0.0457	-0.0278	-2.1748	-0.0439	0.2977	0.2684	0.0978	-0.2951	0.0148	0.0235
Y	0.0069	-0.0218	-0.3034	-0.0906	-0.9612	0.2288	-0.0105	0.0056	0.0630	0.1878
L'	0.0092	-0.0711	-1.3601	-0.1859	-6.9720	-0.1344	0.0574	0.0722	0.5089	-0.0258
N'	-0.0482	0.0213	0.1343	0.2235	-0.9692	-1.5595	0.3476	0.0295	0.0772	-1.0334

CASE 26 60 KT -8 M/S SEA LEVEL 1157 KG MID CG

PHI	THETA	PSI	ALPHA	BETA	GAMMA	OMR	RIS	AIS	OTR
-0.08	-0.20	0.00	15.09	-0.02	-15.29	8.91	0.23	0.25	6.50

XDOT	ZDOT	U0	V0	W0	VTO
29.77	8.14	29.80	-0.01	8.03	30.87

	U	V	Q	T	P	R	DC	DB	DA	DP
X	-0.0258	-0.0004	0.7968	0.0041	-0.1724	-0.0262	-0.0213	0.0912	-0.0062	-0.0022
Z	-0.0536	-0.7181	-0.2066	-0.0113	-3.2078	0.3014	-0.9738	0.2109	0.0041	0.0009
M	0.0146	-0.0261	-2.6651	-0.0570	0.1787	0.2752	0.1317	-0.2904	0.0170	0.0062
Y	-0.0037	-0.0082	-0.2534	-0.0754	-0.7968	0.2027	0.0065	0.0070	0.0575	0.1866
L'	-0.0215	-0.0746	-1.0646	-0.1203	-6.1313	-0.1793	0.0528	0.0848	0.4860	-0.0280
N'	-0.0041	-0.2071	0.7524	0.1989	-1.0032	-1.4288	-0.0062	0.0923	0.0736	-1.0234

MICROFILMED FROM
BEST AVAILABLE COPY

TABLE II-4
OH-6A STABILITY AND CONTROL DERIVATIVES -- US UNITS
(BODY-FIXED FRL AXIS SYSTEM)

CASE 1 -40 KT LEVEL FLIGHT AT SEA LEVEL 2550 LB MID CG

PHI	THETA	PSI	ALPHA	BETA	GAMMA	OMR	B1S	A1S	OTR
-2.83	3.76	0.00	-176.24	0.13	180.00	12.92	-2.58	-0.01	12.43

XDOT	ZDOT	DO	PO	QO	YTO
-67.51	0.00	-67.37	0.16	-0.42	67.51

	U	V	Q	T	P	R	DC	DB	DA	DP
X	-0.0439	0.0251	1.8145	0.0001	-0.7627	-0.0145	0.5544	0.9293	-0.0337	0.0535
Z	0.1559	-0.6323	-0.2270	-0.0177	0.3824	1.3540	-7.5711	-1.0542	-0.0209	-0.0377
M	0.0140	-0.0485	-2.2755	-0.0115	0.2764	0.2079	-0.3065	-0.7713	0.0364	-0.0311
Y	-0.0069	0.0080	-0.6201	-0.0678	-1.7191	0.5094	-0.0171	0.0755	0.5253	1.5678
L'	0.0011	-0.0188	-1.2755	-0.0436	-5.3893	-0.2253	0.0245	0.1518	1.2588	-0.0768
N'	0.0189	-0.0479	-0.8046	0.0713	-1.1928	-1.1883	0.5857	-0.0526	0.1664	-2.6185

CASE 2 -30 KT LEVEL FLIGHT AT SEA LEVEL 2550 LB MID CG

PHI	THETA	PSI	ALPHA	BETA	GAMMA	OMR	B1S	A1S	OTR
-2.24	2.96	0.00	-177.04	0.12	180.00	13.24	-2.34	-0.03	13.72

XDOT	ZDOT	DO	PO	QO	YTO
-50.63	0.00	-50.57	0.10	-2.61	50.63

	U	V	Q	T	P	R	DC	DB	DA	DP
X	-0.0397	0.0173	1.6896	0.0002	-0.7799	-0.0257	0.4385	0.8982	-0.0355	0.0435
Z	0.1980	-0.5453	0.1472	-0.0232	0.5255	1.5799	-7.1588	-0.7427	0.0702	-0.0312
M	0.0157	-0.0357	-2.1514	-0.0084	0.2999	0.1740	-0.2294	-0.7549	0.0366	-0.0175
Y	-0.0060	0.0049	-0.6686	-0.0566	-1.6277	0.4433	-0.0137	0.0763	0.5236	1.4971
L'	0.0027	-0.0139	-1.2462	-0.0436	-5.2968	-0.2487	0.0637	0.1784	1.2584	-0.0713
N'	0.0177	-0.0334	-0.6168	0.0516	-1.1801	-1.0321	0.6656	-0.0276	0.1686	-2.4974

CASE 3 -20 KT LEVEL FLIGHT AT SEA LEVEL 2550 LB MID CG

PHI	THETA	PSI	ALPHA	BETA	GAMMA	OMR	B1S	A1S	OTR
-2.58	2.39	0.00	-177.62	0.11	180.00	13.85	-2.04	-0.10	15.43

XDOT	ZDOT	DO	PO	QO	YTO
-33.76	0.00	-33.73	0.06	-1.40	33.76

	U	V	Q	T	P	R	DC	DB	DA	DP
X	-0.0346	0.0109	1.5295	0.0019	-0.7990	-0.0118	0.3590	0.8820	-0.0322	0.0358
Z	0.1984	-0.4304	-0.1287	-0.0492	0.1091	1.0238	-7.1815	-0.6213	-0.0471	-0.0238
M	0.0153	-0.0240	-2.0047	-0.0056	0.3334	0.1543	-0.1742	-0.7435	0.0387	-0.0007
Y	-0.0045	0.0055	-0.6915	-0.0467	-1.4651	0.4757	-0.0088	0.0843	0.5339	1.4559
L'	0.0029	-0.0091	-1.1905	-0.0431	-5.1219	-0.2131	0.0960	0.1951	1.2746	-0.0778
N'	0.0133	-0.0238	-0.5092	0.0334	-1.2004	-1.0661	0.7499	-0.0252	0.1599	-2.2632

TABLE II-4 CONTINUED
OH-6A STABILITY AND CONTROL DERIVATIVES -- US UNITS
(BODY-FIXED FRL AXIS SYSTEM)

CASE 4 0 KT LEVEL FLIGHT AT SEA LEVEL 2550 LB BID CG

PHI	THETA	PSI	ALPHA	BETA	GAMMA	OMG	DIS	AIS	OTR
-3.05	1.66	0.00	1.65	-0.09	0.00	14.78	-1.21	-0.22	17.33

XDOT	ZDOT	UO	VO	WO	VTO
0.00	0.00	0.00	0.00	0.00	0.00

	U	W	Q	V	P	R	DC	DB	DA	DP
X	-0.0257	0.0113	1.3031	0.0004	-0.8182	-0.0608	0.2167	0.0601	-0.0261	-0.0325
Z	-0.0422	-0.3404	0.0164	-0.0440	0.0582	1.4787	-7.3434	-0.0161	0.0110	-0.0380
M	0.0126	-0.0060	-1.7645	-0.0026	0.3763	0.0719	-0.0785	-0.7408	0.0350	-0.0096
Y	0.0158	-0.0194	-0.0441	-0.0435	-1.3463	0.3428	-0.0577	0.0387	0.5141	1.5380
L'	0.0003	-0.0019	-1.1360	-0.0462	-4.9198	-0.2873	0.1206	0.1874	1.2793	-0.0781
N'	-0.0262	0.0310	-0.1728	-0.0017	-1.0746	-0.8045	0.9507	0.0493	0.1982	-2.5676

CASE 5 20 KT LEVEL FLIGHT AT SEA LEVEL 2550 LB BID CG

PHI	THETA	PSI	ALPHA	BETA	GAMMA	OMG	DIS	AIS	OTR
-2.65	1.52	0.00	1.52	-0.06	0.00	13.84	-0.03	-0.36	14.63

XDOT	ZDOT	UO	VO	WO	VTO
33.76	0.00	33.76	-0.04	0.89	33.76

	U	W	Q	V	P	R	DC	DB	DA	DP
X	-0.0167	0.0216	1.5171	0.0024	-0.7792	-0.0989	0.0901	0.8302	-0.0005	-0.0504
Z	-0.1896	-0.4337	0.1585	-0.0370	-0.0019	1.5269	-6.9870	0.7010	0.1043	-0.0014
M	0.0156	-0.0030	-1.8793	-0.0019	0.3497	0.0954	0.0573	-0.7366	0.0355	0.0274
Y	0.0080	-0.0061	-0.7971	-0.0490	-1.5795	0.4836	-0.0095	0.0605	0.5211	1.5561
L'	0.0005	-0.0068	-1.1404	-0.0445	-5.1712	-0.2623	0.1320	0.1807	1.2678	-0.0701
N'	-0.0214	-0.0076	-0.1569	0.0251	-1.1071	-1.1038	0.7451	0.0350	0.1775	-2.6022

CASE 6 30 KT LEVEL FLIGHT AT SEA LEVEL 2550 LB BID CG

PHI	THETA	PSI	ALPHA	BETA	GAMMA	OMG	DIS	AIS	OTR
-2.00	1.68	0.00	1.68	-0.06	0.00	13.18	0.53	-0.41	12.54

XDOT	ZDOT	UO	VO	WO	VTO
50.63	0.00	50.61	-0.05	1.48	50.63

	U	W	Q	V	P	R	DC	DB	DA	DP
X	-0.0204	0.0180	1.6589	0.0038	-0.6973	-0.1691	0.0234	0.8191	-0.0362	-0.0457
Z	-0.1420	-0.5473	-0.2132	-0.0313	-0.2569	1.2557	-7.2944	0.0619	0.0208	0.0110
M	0.0164	-0.0006	-2.0215	-0.0045	0.3529	0.0824	0.0617	-0.7265	0.0391	0.0371
Y	0.0054	-0.0103	-0.8381	-0.0581	-1.7729	0.4722	-0.0087	0.0659	0.5042	1.1767
L'	0.0001	-0.0110	-1.1558	-0.0486	-5.8030	-0.2649	0.1066	0.1955	1.2681	-0.0598
N'	-0.0176	-0.0134	-0.0275	0.0382	-1.0852	-1.0691	0.7096	0.0436	0.1906	-2.1819

TABLE II-4 CONTINUED
OH-6A STABILITY AND CONTROL DERIVATIVES -- US UNITS
(BODY-FIXED FRL AXIS SYSTEM)

CASE 7 40 KT LEVEL FLIGHT AT SEA LEVEL 2550 LB MID CG

PHI	THETA	PSI	ALPHA	BETA	GAMMA	OMB	B1S	A1S	OTR
-1.74	1.48	0.00	1.48	-0.04	0.00	12.79	0.96	-0.43	11.25

XDOT	ZDOT	UO	VO	WO	VTO
67.51	0.00	67.49	-0.05	1.74	67.51

	U	W	Q	V	P	R	DC	DB	DA	DP
X	-0.0270	0.0125	1.7025	0.0008	-0.7496	-0.0553	0.0480	0.7974	-0.0386	-0.0480
Z	-0.0941	-0.6299	-0.5131	-0.0234	-0.4076	1.4486	-7.5579	1.1230	0.0481	0.0183
M	0.0130	-0.0034	-2.2421	-0.0108	0.2852	0.1843	0.1576	-0.7310	0.0386	0.0428
Y	0.0041	-0.0120	-0.8925	-0.0679	-1.9293	0.4781	-0.0312	0.0457	0.5021	1.3445
L'	-0.0019	-0.0174	-1.2325	-0.0479	-5.4483	-0.2164	0.1262	0.1959	1.2638	-0.0570
N'	-0.0143	-0.0217	0.1582	0.0504	-1.0122	-1.1024	0.5804	0.1108	0.1993	-2.2509

CASE 8 60 KT LEVEL FLIGHT AT SEA LEVEL 2550 LB MID CG

PHI	THETA	PSI	ALPHA	BETA	GAMMA	OMB	B1S	A1S	OTR
-1.54	0.58	0.00	0.58	-0.02	0.00	12.59	1.79	-0.48	10.08

XDOT	ZDOT	UO	VO	WO	VTO
101.27	0.00	101.26	-0.03	1.02	101.27

	U	W	Q	V	P	R	DC	DB	DA	DP
X	-0.0314	0.0107	1.8063	0.0015	-0.7330	-0.0511	-0.0471	0.7747	-0.0370	-0.0600
Z	-0.0371	-0.7150	-0.7060	-0.0210	-0.9559	1.3307	-8.2958	1.8424	0.0266	0.0431
M	0.0105	-0.0040	-2.4843	-0.0186	0.2077	0.2636	0.2750	-0.7463	0.0367	0.0797
Y	0.0009	-0.0186	-0.9996	-0.0836	-1.9421	0.6765	-0.0323	0.0519	0.5016	1.5936
L'	-0.0025	-0.0257	-1.3056	-0.0501	-5.4853	-0.1582	0.1211	0.1852	1.2550	-0.0820
N'	-0.0073	-0.0244	0.5060	0.0646	-1.1022	-1.4412	0.4629	0.1437	0.1883	-2.6705

CASE 9 80 KT LEVEL FLIGHT AT SEA LEVEL 2550 LB MID CG

PHI	THETA	PSI	ALPHA	BETA	GAMMA	OMB	B1S	A1S	OTR
-1.60	-0.77	0.00	-0.77	0.02	0.00	13.02	2.57	-0.60	9.85

XDOT	ZDOT	UO	VO	WO	VTO
135.02	0.00	135.01	0.05	-1.82	135.02

	U	W	Q	V	P	R	DC	DB	DA	DP
X	-0.0379	0.0064	1.7497	0.0011	-0.7229	-0.0641	-0.1749	0.7494	-0.0411	-0.0940
Z	-0.0126	-0.7655	-0.7199	-0.0249	-1.1828	1.5283	-8.9268	2.6539	0.0274	0.0453
M	0.0106	-0.0026	-2.6776	-0.0227	0.2004	0.3948	0.3940	-0.7540	0.0415	0.0724
Y	0.0018	-0.0218	-0.9221	-0.0990	[illegible]	[illegible]	-0.0296	0.0818	0.5176	1.7909
L'	-0.0011	-0.0317	-1.3470	-0.0541	[illegible]	[illegible]	0.1423	0.2607	1.2654	-0.0700
N'	-0.0073	-0.0246	0.5444	0.0765	-0.9747	-1.8727	0.4208	0.1406	0.1642	-1.0011

TABLE II-4 CONTINUED
OH-6A STABILITY AND CONTROL DERIVATIVES -- US UNITS
(BODY-FIXED FRL AXIS SYSTEM)

CASE 10 100 KT LEVEL FLIGHT AT SEA LEVEL 2550 LB MID CG

PHI	THETA	PSI	ALPHA	BETA	GAMMA	OMB	D1S	A1S	OTB
-1.88	-2.14	0.00	-2.14	0.07	0.00	14.03	3.89	-0.86	10.18

XDOT	ZDOT	HO	VO	WO	VTO
168.78	0.00	168.66	0.21	-6.30	168.78

	U	W	Q	V	P	R	DC	DB	DA	DP
X	-0.0437	0.0081	1.5842	0.0015	-0.7338	-0.0515	-0.2188	0.7329	-0.0341	-0.1237
Z	0.0023	-0.7977	-0.8534	-0.0374	-1.5818	1.5950	-9.4861	3.3472	0.0043	0.0914
M	0.0105	-0.0028	-2.0275	-0.0298	0.1469	0.4617	0.4989	-0.7764	0.0393	0.1484
Y	0.0021	-0.0325	-1.1926	-0.1174	-1.8009	1.0293	-0.1012	0.0665	0.5092	1.8299
L*	-0.0009	-0.0377	-1.4309	-0.0617	-5.2565	-0.0058	0.1422	0.1943	1.2713	-0.1057
N*	-0.0074	-0.0038	1.0475	0.0892	-0.9802	-2.0187	0.5988	0.1716	0.1855	-3.0738

CASE 11 120 KT LEVEL FLIGHT AT SEA LEVEL 2550 LB MID CG

PHI	THETA	PSI	ALPHA	BETA	GAMMA	OMB	D1S	A1S	OTB
-2.34	-3.94	0.00	-3.94	0.16	0.00	15.64	5.41	-1.32	10.81

XDOT	ZDOT	HO	VO	WO	VTO
202.54	0.00	202.06	0.57	-13.91	202.54

	U	W	Q	V	P	R	DC	DB	DA	DP
X	-0.0536	0.0075	1.2132	0.0003	-0.7981	-0.0744	-0.2886	0.7085	-0.0340	-0.2170
Z	0.0127	-0.8050	-0.7570	-0.0444	-1.7506	1.9030	-9.6053	4.0888	0.0325	0.0871
M	0.0131	-0.0014	-2.9488	-0.0329	0.1673	0.5662	0.6281	-0.7993	0.0426	0.1297
Y	0.0026	-0.0421	-1.0644	-0.1344	-1.6194	1.2626	-0.2043	0.1027	0.5237	1.9667
L*	0.0003	-0.0455	-1.5519	-0.0716	-5.0022	0.0595	0.1217	0.1897	1.2836	-0.0714
N*	-0.0075	0.0213	0.7900	0.0987	-0.8117	-2.4360	0.9181	0.0844	0.1805	-3.3069

CASE 12 130 KT LEVEL FLIGHT AT SEA LEVEL 2550 LB MID CG

PHI	THETA	PSI	ALPHA	BETA	GAMMA	OMB	D1S	A1S	OTB
-2.66	-4.80	0.00	-4.80	0.22	0.00	16.70	6.48	-1.61	11.46

XDOT	ZDOT	HO	VO	WO	VTO
219.42	0.00	218.64	0.85	-18.35	219.42

	U	W	Q	V	P	R	DC	DB	DA	DP
X	-0.0570	0.0138	0.9531	0.0001	-0.8457	-0.0789	-0.2938	0.6888	-0.0338	-0.2645
Z	0.0178	-0.8096	-1.0144	-0.0485	-1.9111	2.0487	-9.7222	4.3435	0.0357	0.1178
M	0.0152	-0.0020	-2.9912	-0.0354	0.1693	0.6034	0.6736	-0.8228	0.0438	0.1680
Y	0.0036	-0.0488	-1.0486	-0.1438	-1.3789	1.3700	-0.2829	0.1361	0.5331	1.9331
L*	0.0014	-0.0505	-1.6240	-0.0775	-4.8062	0.0913	0.0912	0.1773	1.2925	-0.0652
N*	-0.0092	0.0409	0.6085	0.1537	-0.8152	-2.6430	1.1948	-0.0286	0.1794	-3.2550

MICROFILMED FROM
BEST AVAILABLE COPY

TABLE II-4 CONTINUED
OH-6A STABILITY AND CONTROL DERIVATIVES -- US UNITS
(BODY-FIXED FRL AXIS SYSTEM)

CASE 13 0 KT LEVEL FLIGHT AT SEA LEVEL 2550 LB FWD CG

PHI	THETA	PSI	ALPHA	BETA	GAMMA	OMB	DIS	AIS	OTB
-3.05	0.20	0.00	0.20	-0.01	0.00	14.70	-2.58	-0.10	17.16

XDOT	ZDOT	UO	VO	WO	VTO
0.00	0.00	0.00	0.00	0.00	0.00

	U	W	Q	V	P	R	DC	DB	DA	DP
X	-0.0267	0.0036	1.3039	-0.0008	-0.6226	-0.0195	0.0248	0.0569	-0.0288	-0.0293
Z	-0.0555	-0.3449	0.0016	-0.0457	0.2204	1.5963	-7.2910	0.0323	0.0463	-0.0371
M	0.0118	-0.0109	-1.7601	-0.0031	0.3067	0.0866	-0.1665	-0.7368	0.0368	-0.0103
Y	0.0156	-0.0197	-0.0527	-0.0437	-1.3446	0.3488	-0.0601	0.0353	0.5139	1.5186
L'	-0.0001	-0.0024	-1.0767	-0.0463	-4.8978	-0.2795	0.1209	0.1632	1.2761	-0.0896
N'	-0.0270	0.0313	0.2259	-0.0008	-1.0287	-0.8760	0.9546	0.0509	0.1867	-2.5848

CASE 14 100 KT LEVEL FLIGHT AT SEA LEVEL 2550 LB FWD CG

PHI	THETA	PSI	ALPHA	BETA	GAMMA	OMB	DIS	AIS	OTB
-1.78	-3.54	0.00	-3.54	0.11	0.00	14.05	2.54	-0.04	9.80

XDOT	ZDOT	UO	VO	WO	VTO
168.78	0.00	168.66	0.32	-10.42	168.78

	U	W	Q	V	P	R	DC	DB	DA	DP
X	-0.0039	-0.0095	1.5463	0.0004	-0.7620	0.0013	-0.4437	0.8215	-0.0300	-0.1304
Z	-0.0160	-0.7995	-1.1060	-0.0369	-1.5381	1.6069	-9.5068	3.3057	-0.0084	0.0510
M	0.0106	-0.0106	-2.8644	-0.0292	0.1390	0.0761	0.3643	-0.7413	0.0336	0.0700
Y	0.0015	-0.0328	-1.0170	-0.1173	-1.6886	1.0993	-0.1186	0.0810	0.5135	1.9022
L'	-0.0015	-0.0414	-1.4157	-0.0628	-5.2860	-0.0495	0.1030	0.1779	1.2552	-0.0922
N'	-0.0081	-0.0062	1.1367	0.0914	-0.8335	-2.1766	0.5884	0.1521	0.1627	-3.2454

CASE 15 130 KT LEVEL FLIGHT AT SEA LEVEL 2550 LB FWD CG

PHI	THETA	PSI	ALPHA	BETA	GAMMA	OMB	DIS	AIS	OTB
-2.60	-6.22	0.00	-6.22	0.20	0.00	14.96	5.56	-1.69	11.15

XDOT	ZDOT	UO	VO	WO	VTO
219.42	0.00	218.12	1.08	-23.76	219.42

	U	W	Q	V	P	R	DC	DB	DA	DP
X	-0.0585	0.0136	0.9021	-0.0012	-0.8890	-0.0256	-0.4518	0.7858	-0.0287	-0.2523
Z	0.0054	-0.8085	-1.2746	-0.0497	-1.8568	2.1065	-9.6876	4.2947	0.0339	0.0864
M	0.0169	-0.0153	-3.0149	-0.0359	0.1444	0.0368	0.5166	-0.7660	0.0416	0.1257
Y	0.0042	-0.0514	-1.0459	-0.1450	-1.8404	1.4402	-0.3072	0.1512	0.5398	2.0051
L'	0.0026	-0.0518	-1.5411	-0.0771	-6.7637	0.1053	0.0806	0.1916	1.2958	-0.0925
N'	-0.0111	0.0484	0.8709	0.1089	-0.7004	-2.7851	1.2912	-0.0448	0.1663	-3.4321

TABLE II-4 CONTINUED
OH-6A STABILITY AND CONTROL DERIVATIVES -- US UNITS
(BODY-FIXED FRL AXIS SYSTEM)

CASE 16 0 KT LEVEL FLIGHT AT SEA LEVEL 2550 LB AFT CG

PHI	THETA	PSI	ALPHA	BETA	GAMMA	OMR	B1S	A1S	OTR
-3.08	3.60	0.00	3.59	-0.19	0.00	14.73	0.59	-0.38	17.46

XDOT	ZDOT	U0	V0	W0	VT0
0.00	0.00	0.00	0.00	0.00	0.00

	U	W	Q	V	P	R	DC	DB	DA	DP
X	-0.0256	0.0218	1.2925	0.0026	-0.8203	-0.1221	0.4668	0.8638	-0.0292	-0.0325
Z	-0.0245	-0.3372	0.1247	-0.0587	-0.0669	1.4095	-7.3634	-0.0352	-0.0074	-0.0359
M	0.0135	0.0001	-1.7584	-0.0015	0.3822	0.0681	0.0475	-0.7390	0.0369	-0.0046
Y	0.0159	-0.0187	-0.8456	-0.0428	-1.3522	0.3311	-0.0554	0.0397	0.5166	1.5389
L'	0.0006	-0.0015	-1.2357	-0.0467	-4.9471	-0.2927	0.1244	0.1881	1.2872	-0.0610
N'	-0.0254	0.0304	-0.6567	-0.0048	-1.1246	-0.8418	0.9507	0.0503	0.2162	-2.5172

CASE 17 100 KT LEVEL FLIGHT AT SEA LEVEL 2550 LB AFT CG

PHI	THETA	PSI	ALPHA	BETA	GAMMA	OMR	B1S	A1S	OTR
-1.97	-0.59	0.00	-0.59	0.02	0.00	13.96	5.33	-0.90	10.63

XDOT	ZDOT	U0	V0	W0	VT0
168.78	0.00	168.77	0.06	-1.74	168.78

	U	W	Q	V	P	R	DC	DB	DA	DP
X	-0.0447	0.0250	1.5419	0.0021	-0.6978	-0.1300	0.0214	0.6288	-0.0394	-0.1496
Z	0.0215	-0.7961	-0.6147	-0.0351	-1.5860	1.5898	-9.4732	3.3887	0.0162	0.0676
M	0.0090	0.0141	-2.7721	-0.0270	0.2130	0.4646	0.6941	-0.8331	0.0438	0.1010
Y	0.0015	-0.0281	-1.0041	-0.1159	-1.8596	1.0313	-0.0806	0.0633	0.5089	1.8945
L'	-0.0013	-0.0354	-1.5136	-0.0624	-5.2544	-0.0079	0.1668	0.1867	1.2752	-0.0518
N'	-0.0053	-0.0090	0.2889	0.0829	-0.9133	-1.9918	0.5812	0.1595	0.1965	-3.1075

CASE 18 130 KT LEVEL FLIGHT AT SEA LEVEL 2550 LB AFT CG

PHI	THETA	PSI	ALPHA	BETA	GAMMA	OMR	B1S	A1S	OTR
-2.85	-3.37	0.00	-3.37	0.17	0.00	16.69	7.94	-1.56	12.23

XDOT	ZDOT	U0	V0	W0	VT0
219.42	0.00	219.04	0.64	-12.90	219.42

	U	W	Q	V	P	R	DC	DB	DA	DP
X	-0.0606	0.0297	0.9560	0.0026	-0.7631	-0.1374	-0.0156	0.5617	-0.0318	-0.2427
Z	0.0346	-0.8101	-0.7[illegible]	-0.0487	-2.0360	1.9696	-9.7572	4.3630	0.0284	0.1387
M	0.0124	0.0143	-2.9547	-0.0347	0.1900	0.5635	0.8612	-0.9110	0.0399	0.2065
Y	0.0040	-0.0451	-1.0[illegible]	-0.1423	-1.3420	1.3511	-0.2529	0.1214	0.5117	1.9328
L'	0.0006	-0.0470	-1.7[illegible]	-0.0784	-4.7811	0.0645	0.1[illegible]	0.1577	1.2964	-0.0390
N'	-0.0092	0.0181	0.1[illegible]	0.0967	-0.8624	-2.5711	1.1741	-0.0384	0.1943	-3.1780

TABLE II-4 CONTINUED
OH-6A STABILITY AND CONTROL DERIVATIVES -- US UNITS
(BODY-FIXED FRL AXIS SYSTEM)

CASE 19 0 KT LEVEL FLIGHT AT SEA LEVEL 2200 LB BID CG

PHI	THETA	PSI	ALPHA	BETA	GAMMA	OMR	B1S	A1S	OTR
-3.01	1.77	0.00	1.76	-0.09	0.00	13.78	-1.13	-0.19	15.95

XDOT	ZDOT	UO	VO	WO	VTO
0.00	0.00	0.00	0.00	0.00	0.00

	U	W	Q	V	P	R	DC	DB	DA	DP
X	-0.0240	0.0137	1.2230	0.0012	-0.8221	-0.0654	0.2609	0.8601	-0.0268	-0.0387
Z	-0.0595	-0.3877	-0.0667	-0.0655	0.0013	1.3837	-8.4119	0.0187	-0.0146	-0.0315
M	0.0104	-0.0061	-1.7089	-0.0033	0.3481	0.0605	-0.0844	-0.7194	0.0338	-0.0028
Y	0.0165	-0.0210	-0.8565	-0.0432	-1.2802	0.3849	-0.0610	0.0286	0.5113	1.7860
L'	-0.0004	-0.0017	-1.1067	-0.0405	-5.0207	-0.2977	0.1365	0.1861	1.3026	-0.1170
N'	-0.0250	0.0319	-0.1862	-0.0004	-1.1131	-0.8438	0.9050	0.0566	0.2131	-2.7080

CASE 20 100 KT LEVEL FLIGHT AT SEA LEVEL 2200 LB BID CG

PHI	THETA	PSI	ALPHA	BETA	GAMMA	OMR	B1S	A1S	OTR
-2.06	-2.86	0.00	-2.86	0.10	0.00	13.46	3.48	-0.85	9.69

XDOT	ZDOT	UO	VO	WO	VTO
168.78	0.00	168.57	0.30	-8.42	168.78

	U	W	Q	V	P	R	DC	DB	DA	DP
X	-0.0483	0.0122	1.3737	0.0008	-0.7576	-0.0623	-0.2092	0.6907	-0.0377	-0.1506
Z	0.0093	-0.9375	-0.9210	-0.0375	-1.6918	1.8317	-11.0616	3.9330	0.0342	0.0558
M	0.0096	-0.0045	-2.7468	-0.0286	0.1533	0.4914	0.4895	-0.7444	0.0416	0.0770
Y	0.0023	-0.0340	-1.0665	-0.1313	-1.8017	1.2770	-0.0905	0.0677	0.5175	2.2063
L'	-0.0003	-0.0387	-1.4729	-0.0596	-5.3111	-0.0091	0.1628	0.1864	1.2995	-0.1267
N'	-0.0061	-0.0037	0.6236	0.0922	-0.9092	-2.1983	0.5245	0.1251	0.1902	-3.3526

CASE 21 130 KT LEVEL FLIGHT AT SEA LEVEL 2200 LB BID CG

PHI	THETA	PSI	ALPHA	BETA	GAMMA	OMR	B1S	A1S	OTR
-2.98	-6.01	0.00	-6.01	0.31	0.00	16.62	6.50	-1.74	10.72

XDOT	ZDOT	UO	VO	WO	VTO
219.42	0.00	218.21	1.19	-22.96	219.42

	U	W	Q	V	P	R	DC	DB	DA	DP
X	-0.0636	0.0376	0.6203	-0.0007	-0.8514	-0.0562	-0.1692	0.6329	-0.0203	-0.2644
Z	0.0261	-0.9657	-0.8739	-0.0596	-2.2409	2.2705	-11.6727	5.1251	0.0245	0.0983
M	0.0144	-0.0065	-2.8787	-0.0362	0.1318	0.6142	0.6160	-0.7834	0.0389	0.1233
Y	0.0049	-0.0551	-1.2399	-0.1646	-1.2603	1.6361	-0.2968	0.1088	0.5441	2.3176
L'	0.0027	-0.0489	-1.7526	-0.0775	-5.7659	0.1038	0.1556	0.1562	1.3332	-0.1267
N'	-0.0083	0.0095	0.5284	0.1106	-0.7973	-2.7841	1.1701	-0.0448	0.2005	-1.5312

TABLE II-4 CONTINUED
OH-6A STABILITY AND CONTROL DERIVATIVES -- US UNITS
(BODY-FIXED FRL AXIS SYSTEM)

CASE 22 0 KT LEVEL FLIGHT 5000 FT 2550 LB MID CG

PHI	THETA	PSI	ALPHA	BETA	GAMMA	OBB	B1S	A1S	OTR
-3.18	1.66	0.00	1.65	-0.09	0.00	15.75	-1.21	-0.22	18.99

XDOT	ZDOT	UO	VO	WO	VTO
0.00	0.00	0.00	0.00	0.00	0.00

	U	V	Q	T	P	R	DC	DB	DA	DR
X	-0.0272	0.0101	1.5208	0.0010	-0.7823	-0.0632	0.1891	0.8573	-0.0328	-0.0396
Z	-0.0334	-0.3001	0.1288	-0.0025	0.3089	1.5434	-6.4051	0.0457	0.0327	-0.0268
M	0.0139	-0.0054	-2.0493	-0.0029	0.3207	0.0788	-0.0686	-0.7391	0.0388	0.0122
Y	0.0140	-0.0182	-0.7605	-0.0432	-1.5422	0.2862	-0.0456	0.0525	0.5152	1.3594
L'	-0.0017	-0.0020	-0.9629	-0.0522	-5.7392	-0.3433	0.1066	0.2045	1.2651	-0.0679
N'	-0.0248	0.0278	-0.1537	-0.0061	-1.2045	-0.8117	0.9150	0.0401	0.1894	-2.2763

CASE 23 100 KT LEVEL FLIGHT 5000 FT 2550 LB MID CG

PHI	THETA	PSI	ALPHA	BETA	GAMMA	OBB	B1S	A1S	OTR
-1.84	-1.69	0.00	-1.69	0.05	0.00	14.77	4.18	-0.80	10.90

XDOT	ZDOT	UO	VO	WO	VTO
168.78	0.00	168.71	0.16	-4.98	168.78

	U	V	Q	T	P	R	DC	DB	DA	DR
X	-0.0817	0.0043	1.8047	0.0011	-0.7167	-0.0826	-0.2304	0.7563	-0.0448	-0.1371
Z	0.0027	-0.6574	-0.6645	-0.0261	-1.0949	1.6078	-7.7135	2.8567	0.0329	0.0563
M	0.0124	0.0030	-2.9885	-0.0239	0.1738	0.4856	0.5240	-0.7756	0.0517	0.0877
Y	0.0010	-0.0291	-0.8743	-0.1038	-2.0469	0.9049	-0.1308	0.0839	0.5059	1.6426
L'	-0.0013	-0.0352	-1.1353	-0.0606	-5.9801	-0.0817	0.1027	0.2350	1.2605	-0.0636
N'	-0.0066	0.0036	0.7692	0.0749	-0.9537	-1.8553	0.8138	0.1551	0.1797	-2.7576

CASE 24 130 KT LEVEL FLIGHT 5000 FT 2550 LB MID CG

PHI	THETA	PSI	ALPHA	BETA	GAMMA	OBB	B1S	A1S	OTR
-2.74	-4.06	0.00	-4.06	0.19	0.00	17.32	6.90	-1.42	12.95

XDOT	ZDOT	UO	VO	WO	VTO
219.[illegible]	0.00	218.86	0.74	-15.53	219.42

	U	V	Q	T	P	R	DC	DB	DA	DR
X	-0.0551	[illegible].0167	1.2758	0.0009	-0.7925	-0.0976	-0.1887	0.7586	-0.0334	-0.2059
Z	0.0165	-[illegible].6755	-1.5170	-0.0391	-1.[illegible]827	1.8076	-7.9962	3.6181	0.0412	0.1489
M	0.0152	-0.0017	-3.2237	-0.0303	0.1210	0.5472	0.6379	-0.8496	0.0472	0.2365
Y	0.0022	-0.0433	-0.8851	-0.1250	-1.5250	1.1880	-0.2486	0.1312	0.5258	1.6356
L'	-0.0009	-0.0456	-1.2957	-0.0728	-5.[illegible]983	-0.0138	0.0769	0.2209	1.2660	-0.0435
N'	-0.0071	[illegible].0567	0.5306	0.0867	-0.[illegible]669	-2.3[illegible]51	1.[illegible]718	-0.0141	0.1735	-2.7506

TABLE II-4 CONCLUDED
OH-6A STABILITY AND CONTROL DERIVATIVES -- US UNITS
(BODY-FIXED FRL AXIS SYSTEM)

CASE 25 60 KT 1116 FT/MIN SEA LEVEL 2550 LB MID CG

PHI	THETA	PSI	ALPHA	BETA	GAMMA	ORR	BIS	AIS	QTR
-2.63	0.62	0.00	-9.96	0.65	10.58	15.19	2.64	-0.97	12.71

XDOT	ZDOT	UO	VO	WO	VTO
99.55	-18.60	99.74	0.80	-17.51	101.27

	U	W	Q	V	P	R	DC	DB	DA	DP
X	-0.0308	0.0385	1.1910	0.0001	-0.8346	-0.0395	0.0199	0.7946	-0.0310	-0.1065
Z	-0.0245	-0.7023	-0.5048	-0.0227	-0.9254	1.6151	-8.3309	1.8087	0.0339	0.0279
M	0.0139	-0.0085	-2.1748	-0.0134	0.2977	0.2684	0.2474	-0.7496	0.0375	0.0597
Y	0.0069	-0.0218	-0.9955	-0.0906	-1.5130	0.7507	-0.0876	0.0464	0.5287	1.5646
L'	0.0028	-0.0217	-1.3601	-0.0567	-8.9720	-0.1344	0.1457	0.1833	1.2925	-0.0656
N'	-0.0147	0.0065	0.1343	0.0681	-0.9692	-1.5595	0.8829	0.0749	0.1962	-2.6289

CASE 26 60 KT -1602 FT/MIN SEA LEVEL 2550 LB MID CG

PHI	THETA	PSI	ALPHA	BETA	GAMMA	ORR	BIS	AIS	QTR
-0.08	-0.20	0.00	15.09	-0.02	-15.29	8.91	0.23	0.25	6.50

XDOT	ZDOT	UO	VO	WO	VTO
97.69	26.70	97.78	-0.04	26.36	101.27

	U	W	Q	V	P	R	DC	DB	DA	DP
X	-0.0254	-0.0004	2.6141	0.0041	-0.5657	-0.0861	-0.1776	0.7600	-0.0516	-0.0181
Z	-0.0536	-0.7181	-0.6779	-0.0113	-0.6817	0.9888	-8.1153	1.7578	0.0343	0.0079
M	0.0045	-0.0080	-2.6651	-0.0178	0.1787	0.2752	0.3386	-0.7376	0.0432	0.0158
Y	-0.0037	-0.0082	-0.8314	-0.0754	-2.6141	0.6649	0.0539	0.0581	0.4795	1.5586
L'	-0.0066	-0.0227	-1.0646	-0.0367	-6.1313	-0.1793	0.1380	0.2155	1.2344	-0.0712
N'	-0.0012	-0.0632	0.7524	0.0606	-1.0032	-1.4288	-0.0158	0.2345	0.1865	-2.5995

TABLE II-5

OH-6A TRANSFER FUNCTION FACTORS

CASE 1 -40 KT

DENOMINATOR: (0) (-.3433) (.0982) (-1.72) (5.15)[-.916;.402][.987;3.45]<.0723>

CONTROL NUMERATORS:

PHI/DA 1.27 (0) (.101) (-1.75)[-.902;.400][.967;3.25]<-.378>
THE/DB -.773 (0) (.0345) (-.0432) (.576) (-1.74) (3.01) (5.30)<-.0184>
PSI/DP -2.62 (.109) (3.61) (5.29)[-.861;.382][-.0378;.512]<-.208>

PHI/DB 1.52 (0) (.0539) (-.211) (3.50)[-.938;1.21]<-.0577>
THE/DA .586 (0) (.0349) (-.0492) (.533) (-1.80) (2.52)<.002+4>

PHI/DA ;THE/DB -.987 (0) (.0345) (.573) (-1.76) (2.98)<.0990>
PHI/DA ;PSI/DP -3.28 (0) (.0380) (3.43)[-.843;.364]<-.132>
THE/DB ;PSI/DP 2.02 (.0346) (.552) (5.41)[-.0777;.536]<.0601>

PHI/DB ;PSI/DP -.399 (.0169) (-.179) (9.77)[.0485;.291]<.00212>
PHI/DP ;THE/DB .210 (0) (.0346) (.583) (-8.40) (7.23)<-.126>
PHI/DC ;THE/DB -.282 (0) (.0349) (1.54) (-5.22)<.0793>

THE/DA ;PSI/DP -1.41 (.0374) (.456) (-.862) (1.17)<.0283>
THE/DP ;PHI/DA -.147 (0) (.0374) (.470) (-2.24) (8.75)<.0539>
THE/DC ;PHI/DA -.365 (0) (.0381) (2.58)[-.971;1.35]<-.0662>

PSI/DA ;THE/DB -.127 (.0345) (.571) (2.04)[-.943;3.05]<-.0472>
PSI/DB ;PHI/DA -.0568 (.0137) (.180) (-.285)[-.654;6.60]<.00175>
XD/DB ;PHI/DA 1.09 (0) (.703) (-1.76) (2.80)[.0692;8.99]<-94.9>

YD/DA ;THE/DB -.407 (.0345) (.573) (-1.77) (2.92)[.0813;8.75]<3.19>
ZD/DP ;PHI/DA -1.41 (0) (-.0523) (-1.76) (3.01)[.189;5.17]<-10.4>
XD/DC ;PHI/DA 12.0 (0) (2.55)[-.984;1.34]<50.8>

YD/DP ;THE/DB -1.20 (.0346) (.545)[-.683;2.79][.959;8.79]<-4.05>
ZD/DC ;PHI/DA -9.63 (0) (-.0985) (-.690) (-1.71)[.970;2.98]<9.93>

PHI/DA ;THE/DB ;PSI/DP 2.55 (.00232) (.0352) (.559)<.000116>
PHI/DC ;THE/DB ;PSI/DP -.111 (.0335) (-.0946) (-2.55)<-.000899>
THE/DC ;PHI/DA ;PSI/DP 1.03 (-.0163) (.0383) (-.503)<.000323>

PSI/DC ;PHI/DA ;THE/DB -.598 (.0264) (.0470) (1.05)<-.000779>
YD/DP ;PHI/DA ;PSI/DP -2.83 (.00190) (.666)[.0644;8.99]<-.0891>
YD/DA ;THE/DB ;PSI/DP 1.25 (.0355) (.558)[.0261;8.06]<1.62>

ZD/DC ;PHI/DA ;THE/DB 7.08 (0) (.0219) (-1.77) (2.81)<-.770>
ZD/DC ;PHI/DA ;PSI/DP 25.0 (-.00865) (-.140) (-.370) (2.77)<-.0110>
XD/DC ;PHI/DA ;THE/DB .257 (0) (2.50)[-.927;1.88]<2.28>

XD/DC ;PHI/DA ;PSI/DP -33.1 (-.0168) (-.497)<-.276>
YD/DP ;PHI/DA ;THE/DB -1.65 (.0405) (.369)[.242;.564]<-.00784>
ZD/DB ;PHI/DA ;PSI/DP 1.64 (.00122) (-.0484)[.198;5.20]<-.00584>

ZD/DC ;PHI/DA ;THE/DB ;PSI/DP -18.2 (.0107) (.0192)<-.00376>
XD/DC ;PHI/DA ;THE/DB ;PSI/DP -.714 (-.00872) (-1.14)<-.00724>

MICROFILMED FROM
BEST AVAILABLE COPY

TABLE II-5 CONTINUED
OH-6A TRANSFER FUNCTION FACTORS

CASE 3 -20KT

DENOMINATOR: (0) (.116) (-.302) (-.470) (2.06) (2.47) (5.01) [-.188;.460] <.0885>

CONTROL NUMERATORS:

PHI/DA 1.28 (0) (.125) (-.734) (2.04) (2.22) [-.199;.452] <-.110>
THE/DB -.744 (0) (.0245) (-.299) (.430) (-.459) (1.81) (5.07) <-.00988>
PSI/DP -2.76 (.125) (2.61) (5.03) [-.257;.438] [.0349;.518] <-.234>

PHI/DB .195 (0) (.0503) (-.753) (2.07) (6.94) [-.106;.581] <-.0349>
THE/DA .638 (0) (.0278) (-.318) (.512) (-.621) (1.57) <.00281>

PHI/DA ;THE/DB -.962 (0) (.0247) (.441) (-.734) (1.74) <.0133>
PHI/DA ;PSI/DP -3.51 (.00428) (.126) (2.47) [-.181;.442] <-.000911>
THE/DB ;PSI/DP 2.06 (.0248) (.392) (5.09) [-.0463;.535] <.0292>

PHI/DB ;PSI/DP -.538 (6.88) [-.174;.0115] [.231;.357] <-.626E-4>
PHI/DP ;THE/DB .168 (0) (.0248) (.384) (-3.43) (5.57) <-.0305>
PHI/DC ;THE/DB -.0679 (0) (.0253) (.703) (-2.57) (5.14) <.0159>

THE/DA ;PSI/DP -1.71 (.0296) (.110) (-.474) (.818) <.00216>
THE/DP ;PHI/DA -.152 (0) (.0294) (.153) (-.530) (6.16) <.00223>
THE/DC ;PHI/DA -.183 (0) (.0316) (-.538) (1.34) (-1.57) <-.00654>

PSI/DA ;THE/DB -.118 (.0247) (.447) (1.29) (-1.86) (-8.09) <-.0128>
PSI/DP ;PHI/DA .238 (.00315) (.0914) [-.999;1.22] <.000102>
XD/DB ;PHI/DA 1.10 (0) (.477) (-.734) (1.72) [.0667;5.21] <-18.0>

YD/DA ;THE/DB -.398 (.0247) (.440) (-.744) (1.75) [.101;8.75] <.431>
ZD/DB ;PHI/DA -.833 (0) (-.365) (-.730) (1.89) [.223;4.07] <-6.94>
XD/DC ;PHI/DA .0813 (0) (-.524) (1.33) (-1.45) [.0788;8.94] <6.55>

YD/DP ;THE/DB -1.22 (.0248) (.396) (3.40) (4.78) [-.639;2.28] <-.985>
ZD/DC ;PHI/DA -9.19 (0) (-.655) [-.460;.399] [.987;2.00] <3.83>

PHI/DA ;THE/DB ;PSI/DP 2.63 (.00425) (.0248) (.407) <.000113>
PHI/DC ;THE/DB ;PSI/DP .0606 (.0245) (-.0795) (3.42) <-.000404>
THE/DC ;PHI/DA ;PSI/DP .611 (.00149) (.0317) (-.558) <-.161E-4>

PSI/DC ;PHI/DA ;THE/DB -.717 (.0190) (.0283) (.611) <-.000235>
XD/DB ;PHI/DA ;PSI/DP -1.02 (.00426) (.437) [.0653;5.20] <-.152>
YD/DA ;THE/DB ;PSI/DP 1.29 (.0248) (.403) [.0378;8.09] <.846>

ZD/DC ;PHI/DA ;THE/DB 6.78 (0) (.00751) (-.648) (1.60) <-.0528>
ZD/DC ;PHI/DA ;PSI/DP 25.3 (.00464) (2.23) [-.334;.369] <.0357>
XD/DC ;PHI/DA ;THE/DB .0964 (0) (-.717) (1.28) (-1.14) <.279>

XD/DC ;PHI/DA ;PSI/DP -.248 (.00119) (-.524) [-.00398;9.08] <.0128>
YD/DP ;PHI/DA ;THE/DB -1.67 (.0245) (.226) [.185;.643] <-.00382>
ZD/DB ;PHI/DA ;PSI/DP 2.28 (.00429) (-.349) [.231;4.11] <-.0575>

ZD/DC ;PHI/DA ;THE/DB ;PSI/DP -18.6 [.807;.0135] <-.00341>
XD/DC ;PHI/DA ;THE/DB ;PSI/DP -.342 (.00228) (-1.43) <.00111>

TABLE II-5 CONTINUED
OH-6A TRANSFER FUNCTION FACTORS

CASE 4 HOVER

DENOMINATOR: (0) (.229) (.821) (2.01) (4.93)[.00106;.408][-.0283;.512]<.0814>
HD YD PD R P PL

CONTROL NUMERATORS:

PHI/DA 1.28 (0) (.0216) (.232) (.812) (1.87)[-.00771;.395]<.00153>
THE/DB -.737 (0) (.0164) (.249) (.892) (4.96)[-.0338;.554]<-.00409>
PSI/DP -2.56 (.157) (2.00) (4.83)[-.190;.476][.0541;.527]<-.555>

PHI/DB .190 (0) (.0203) (.316) (.915) (6.25)[-.148;.294]<.000603>
PHI/DP -.152 (0) (.0133) (.372) (-1.88) (2.16)[-.202;.305]<.000223>
PHI/DC .148 (0) (-.207) (2.50)[.897;.274][-.225;.418]<-.00100>

THE/DA .662 (0) (.115) (-.177) (.848)[.914;.136]<-.000223>
THE/DP -.146 (0) (.0224) (.269) (2.47) (5.79)[-.0478;.551]<-.00382>
THE/DC -.0278 (0) (.0198) (.206) (4.21) (-4.90)[-.0780;.533]<.000664>

PSI/DA .196 (.0178) (1.22) (1.49)[.365;.260][-.917;1.61]<.00114>
PSI/DB .0887 (.418) (-1.94) (5.50)[-.0236;.578][.485;1.65]<-.359>
PSI/DC .954 (.161) (1.95) (4.77)[-.185;.435][-.00342;.535]<.0775>

YD/DB .859 (0) (.250) (.893) (4.98)[-.0336;.554][.0522;5.25]<8.06>
YD/DA .514 (0) (.231) (.807) (1.89)[-.00771;.395][.0987;8.91]<2.25>
ZD/DC -7.33 (0) (.437) (2.01) (4.92)[.121;.396][-.0327;.509]<-1.29>

YD/DC -.194 (0) (.206) (3.97)[-.0779;.534][-.484;4.89]<-1.08>
YD/DP 1.53 (0) (.326) (2.07) (5.76)[-.148;.320][-.328;1.20]<.873>
ZD/DB -.0430 (0) (1.55) (2.50) (5.51)[-.0592;.522][-.392;3.46]<-2.99>

PHI/DA ;THE/DB -.956 (0) (.0161) (.0216) (.253) (.892)<-.750E-4>
PHI/DA ;PSI/DP -3.27 (.0216) (.358) (1.85)[-.125;.471]<-.0104>
THE/DB ;PSI/DP 1.90 (.0115) (.336) (4.87)[-.0306;.556]<.0110>

PHI/DB ;PSI/DP -.474 (.0305) (.362) (6.41)[-.0661;.306]<-.00313>
PHI/DP ;THE/DB .140 (0) (.0178) (.540)[-.216;.113]<.171E-4>
PHI/DC ;THE/DB -.104 (0) (.0163) (-.117)[.955;.478]<.454E-4>

THE/DA ;PSI/DP -1.67 (-.269) (.506)[.790;.0831]<.00157>
THE/DP ;PHI/DA -.181 (0) (.274) (2.97)[.996;.0220]<-.709E-4>
THE/DC ;PHI/DA -.0424 (0) (.0114) (.0291) (.208) (-3.31)<.971E-5>

PSI/DA ;THE/DB -.149 (.880)[.680;.0677][-.950;1.32]<-.00104>
PSI/DB ;PHI/DA .0767 (.0216) (.406) (-2.00)[.592;2.24]<-.00674>
PSI/DC ;THE/DB -.701 (.0100) (.0906) (4.80)[-.0341;.561]<-.0009E2>

PSI/DC ;PHI/DA 1.20 (.0216) (.165) (1.83)[-.174;.435]<.00187>
YD/DB ;PHI/DA 1.11 (0) (.0216) (.253) (.893)[.0601;5.26]<.151>
YD/DB ;PSI/DP -2.20 (.335) (4.89)[-.0307;.556][.0517;5.27]<-30.9>

YD/DA ;THE/DB -.381 (0) (.0160) (.252) (.892)[.0976;8.95]<-.110>
YD/DA ;PSI/DP -1.62 (.355) (1.86)[-.123;.471][.0521;8.04]<-15.3>
ZD/DC ;PHI/DA -9.42 (0) (.0269) (.437) (1.87)[.0943;.375]<-.0292>

ZD/DC ;THE/DB 5.40 (0) (.0172) (.617) (4.95)[-.0312;.559]<.0891>
ZD/DC ;PSI/DP 18.9 (2.01) (4.83)[-.183;.480][.0598;.535]<12.0>
YD/DC ;PHI/DA .0104 (0) (.0204) (.208) (-4.41)[-.396;9.92]<-.0192>

YD/DC ;THE/DB .0201 (0) (.200) (-1.35) (6.46)[-.0280;.571]<-.0115>
YD/DC ;PSI/DP .759 (-.207) (4.47) (-8.98)[-.100;.585]<2.16>
YD/DP ;PHI/DA 2.04 (0) (.0906) (.141) (1.84)[-.0120;.460]<.0102>

YD/DP ;THE/DB -1.12 (0) (-.00611) (.365) (5.76)[-.818;.480]<.00133>
ZD/DB ;PHI/DA -.0523 (0) (.0217) (1.50) (3.68)[-.360;2.91]<-.0530>
ZD/DB ;PSI/DP .121 (4.47) (5.51)[-.0281;.496][-.249;2.68]<5.26>

PHI/DA ;THE/DB ;PSI/DP 2.48 (.0109) (.0218) (.340)<.000198>
PHI/DC ;THE/DB ;PSI/DP .135 (.0114) (-.127) (.645)<-.000127>
THE/DC ;PHI/DA ;PSI/DP .276 (0) (.0329) (-.192)<-.00174>

TABLE II-5 CONTINUED
OH-6A TRANSFER FUNCTION FACTORS

CASE 4 HOVER

CONTROL NUMERATORS CONCLUDED:

PSI/DC ;PHI/DA ;THE/DB -.888 (.0952)[.828;.0186]<-.292E-4>

XD/DB ;PHI/DA ;PSI/DP -2.82 (.0216) (.339)[.0592;5.28]<-.575>
YD/DA ;THE/DB ;PSI/DP 1.21 (.0112) (.337)[.0535;8.06]<.296>
ZD/DC ;PHI/DA ;THE/DB 7.01 (0) (.0148) (.0276) (.618)<.00177>

ZD/DC ;THE/DB ;PSI/DP -14.0 (.0116) (4.87)[-.0316;.560]<-.248>
ZD/DC ;PHI/DA ;PSI/DP 24.1 (.0256) (1.86)[-.112;.476]<.260>
XD/DC ;PHI/DA ;THE/DB .0289 (0) (.00111) (.220) (-1.83)<-.130E-4>

XD/DC ;PHI/DA ;PSI/DP -8.78 (.0180) (-.208)<.0328>
XD/DC ;THE/DB ;PSI/DP -.197 (-.0214) (5.09)[-.0268;.561]<.00675>
YD/DP ;PHI/DA ;THE/DB -1.53 (0) (.0152) (.0960) (.179)<-.000399>

ZD/DB ;PHI/DA ;PSI/DP .142 (.0205) (5.10)[-.189;2.36]<.0825>

ZD/DC ;PHI/DA ;THE/DB ;PSI/DP -18.0 (.0105) (.0261)<-.30493>
XD/DC ;PHI/DA ;THE/DB ;PSI/DP -.254 [-.168;.0538]<-.000735>

GUST NUMERATORS:

PHI/UG .0116 (0) (0) (0) (-.0155) (.101) (.610)<-.111E-4>
THE/UG -.0111 (0) (0) (.223) (.690) (5.02)[-.0240;.548]<-.00.53>
PSI/UG .0260 (0) (0) (.393) (1.76) (5.07)[-.0230;.538]<.0264>

PHI/VG .0462 (0) (0) (.227) (.847) (1.82)[-.00596;.395]<.00253>
THE/VG .0298 (0) (0) (0) (.0146) (.262) (.642)<.734E-4>
PSI/VG -.0499 (0) (0) (-.388) (1.76)[.678;.403]<.00553>

PHI/WG -.00143 (0) (0) (5.07)[.355;.346][-.428;.371]<-.000120>
THE/WG .00449 (0) (0) (4.93)[.815;.0173][-.0233;.545]<.196E-5>
PSI/WG -.0321 (0) (1.90) (4.93)[-.0787;.372][-.0144;.522]<-.0114>

PHI/PG 4.96 (0) (.0254) (.237) (.813) (1.98)[-.0118;.386]<.00717>
THE/PG -.322 (0) (.0147) (.263) (.652) (1.40)[-.503;1.44]<-.00236>
PSI/PG 1.12 (-.351) (1.19) (1.87)[.661;.400][-.425;1.12]<-.176>

PHI/QG 1.15 (0) (-.0150) (.0935) (.506) (1.09)[-.381;.632]<-.000356>
THE/QG 1.77 (0) (.0191) (.248) (.898) (5.27)[-.0354;.529]<.0111>
PSI/QG .124 (.197)[-.0342;.537][.669;1.90][-.915;4.07]<.849>

PHI/RG .108 (0) (0) (.106) (.388) (3.12)[-.0862;.353]<.00172>
THE/RG -.111 (0) (0) (.0209) (.275) (4.74)[-.0569;.578]<-.00100>
PSI/RG .830 (.278) (1.91) (4.83)[-.0797;.367][-.0133;.534]<.0814>

XD/UG .0269 (0) (.222) (.681) (5.02)[-.0252;.544][.194;3.67]<.0914>
ZD/UG .0519 (0) (0) (0) (1.50) (1.97) (4.89)[-.0419;.518]<.201>
YD/VG .0477 (0) (.228) (.868) (1.81)[-.00673;.396][.327;5.52]<.0814>

XD/WG -.00236 (0) (0) (.00675) (4.93)[-.0226;.545][-.0740;7.82]<-.001413>
ZD/WG .335 (0) (.546) (2.01) (4.91)[.0300;.415][-.0293;.510]<.0814>

PHI/UG ;THE/DB .00178 (0) (0) (.0203) (.384) (1.35)<.187E-4>
PHI/UG ;PSI/DP -.0314 (0) (0) (0) (.354)<-.0111>
THE/UG ;PHI/DA -.0143 (0) (0) (.0216) (.225) (.683)<-.475E-4>

THE/UG ;PSI/DP .0322 (0) (.363) (5.00)[-.0281;.543]<.0173>
PSI/UG ;PHI/DA .0333 (0) (0) (.0216) (.404) (1.70)<.000495>
PSI/UG ;THE/DB -.0182 (0) (.406) (5.05)[-.0319;.547]<-.0112>

PHI/VG ;THE/DB -.0346 (0) (0) (.0164) (.249) (.901)<-.000127>
PHI/VG ;PSI/DP -.119 (0) (.357) (1.81)[-.125;.474]<-.0173>
THE/VG ;PHI/DA .00167 (0) (0) (.0792)[.583;.229]<.694E-5>

THE/VG ;PSI/DP -.0817 (0) (0) (.0105) (.282)<-.000241>
PSI/VG ;PHI/DA -.00927 (0) (.0180) (1.79)[.0168;.344]<-.353E-4>
PSI/VG ;THE/DB .0345 (0) (0) (.00868) (.155)<.464E-4>

TABLE II-5 CONTINUED
OH-6A TRANSFER FUNCTION FACTORS

CASE 4 HOVER

GUST NUMERATORS CONTINUED:

PHI/WG ;THE/DB .000204 (0) (0) (.0164)[-.826;1.34]<.600E-5>
PHI/WG ;PSI/DP .0185 (0) (.429)[-.343;.327]<.000848>
THE/WG ;PHI/DA .00588 (0) (0) (-.0244)[.816;.0852]<-.292E-6>

THE/WG ;PSI/DP -.0162 (0) (.0227) (5.00)[-.0433;.588]<-.000546>
PSI/WG ;PHI/DA -.0410 (0) (.0217) (1.80)[-.0764;.364]<-.000211>
PSI/WG ;THE/DB .0233 (0) (.0165) (4.95)[-.0347;.553]<.000579>

PHI/PG ;THE/DB -3.59 (0) (.0164) (.0259) (.252) (.889)<-.000342>
PHI/PG ;PSI/DP -12.5 (.0259) (.358) (1.97)[-.117;.460]<-.0484>
THE/PG ;PHI/DA -.639 (0) (.00827) (.0229) (.250) (.817)<-.246E-4>

THE/PG ;PSI/DP .989 (.0106) (.279) (1.45)[-.473;1.36]<.00787>
PSI/PG ;PHI/DA .465 (.0216) (.489) (-.636)[.999;1.04]<-.00339>
PSI/PG ;THE/DB -.796 (.00894) (.151) (1.26)[-.432;1.08]<-.00160>

PHI/QG ;THE/DB -1.19 (0) (.252) (.883)[.983;.0156]<-.646E-4>
PHI/QG ;PSI/DP -2.94 (0) (.352) (.709)[-.490;.701]<-.360>
THE/QG ;PHI/DA 2.22 (0) (.0183) (.0225) (.253) (.899)<.000208>

THE/QG ;PSI/DP -8.51 (.0164) (.342) (5.21)[-.0291;.524]<-.0361>
PSI/QG ;PHI/DA -.0664 (.0216) (.403) (-3.26)[.885;2.91]<.0159>
PSI/QG ;THE/DB -.248 (-.0988) (.187) (1.23)[-.545;1.07]<.00650>

PHI/RG ;THE/DB -.0587 (0) (0) (.0163) (.161) (.513)<-.789E-4>
PHI/RG ;PSI/DP -.151 (.00686) (.371) (4.94)[-.0784;.342]<-.000223>
THE/RG ;PHI/DA -.147 (0) (0) (.0119) (.0298) (.280)<-.1417-4>

THE/RG ;PSI/DP .405 (.0225) (.275) (4.83)[-.0338;.562]<.00382>
PSI/RG ;PHI/DA 1.05 (.0216) (.282) (1.80)[-.0770;.365]<.00153>
PSI/RG ;THE/DB -.602 (.0163) (.274) (4.85)[-.0311;.557]<-.00409>

XD/UG ;PHI/DA .0346 (0) (.0216) (.225) (.675)[.190;3.67]<.00153>
XD/UG ;THE/DB -.0103 (0) (.257) (1.00) (5.03)[-.0310;.554]<-.00409>
XD/UG ;PSI/DP -.0681 (.364) (5.00)[-.0292;.583][.144;3.90]<-.555>

ZD/UG ;PHI/DA .0667 (0) (0) (0) (.0210) (1.52) (1.75)<.00371>
ZD/UG ;THE/DB -.0387 (0) (0) (1.51) (4.94)[-.0331;.567]<-.0929>
ZD/UG ;PSI/DP -.130 (0) (0) (1.82) (4.82)[.0225;.478]<-.260>

YD/VG ;PHI/DA .0375 (0) (.226) (.630) (1.83)[-.0119;.396]<.00153>
YD/VG ;THE/DB -.0353 (0) (.0164) (.249) (.925)[.316;5.55]<-.00409>
YD/VG ;PSI/DP -.122 (.359) (1.80)[-.125;.474][.264;5.60]<-.555>

XD/WG ;PHI/DA -.00308 (0) (0) (-.0125) (.0412)[-.0478;7.81]<.965E-4>
XD/WG ;THE/DB -.00212 (0) (0) (.0176) (5.03)[-.0410;.554]<-.000123>
XD/WG ;PSI/DP .510 (0) (5.12)[-.0425;.588]<.773>

ZD/WG ;PHI/DA .430 (0) (.0218) (.542) (1.87)[.0191;.400]<.00153>
ZD/WG ;THE/DB -.247 (0) (.0164) (.665) (4.96)[-.0348;.554]<-.00409>
ZD/WG ;PSI/DP -.863 (2.01) (4.83)[-.179;.482][.0505;.534]<-.555>

XD/UG ; ZD/DC -.198 (0) (.309) (4.99)[-.0217;.554][.196;3.72]<-1.29>
YD/VG ; ZD/DC -.323 (0) (.427) (1.86)[.0923;.581][.306;5.88]<-1.29>

PHI/UG ;THE/DB ;PSI/DP -.00805 (0) (.0306) (.395)<-.972E-4>
THE/UG ;PHI/DA ;PSI/DP .0409 (0) (.0216) (.366)<.000321>
PSI/UG ;PHI/DA ;THE/DB -.0239 (0) (.0216) (.405)<-.000209>

PHI/VG ;THE/DB ;PSI/DP .0844 (0) (.0115) (.134)<.000181>
THE/VG ;PHI/DA ;PSI/DP -.00536 (0)[.812;.0918]<-.489E-4>
PSI/VG ;PHI/DA ;THE/DB .00680 (0)[.680;.0690]<.323E-4>

PHI/WG ;THE/DB ;PSI/DP .00189 (0) (.0107) (-.329)<-.138E-4>
THE/WG ;PHI/DA ;PSI/DP -.0206 (0) (.0124) (.0107)<-.784E-5>
PSI/WG ;PHI/DA ;THE/DB .0301 (0) (.0118) (.0256)<.910E-5>

TABLE II-5 CONTINUED
OH-6A TRANSFER FUNCTION FACTORS

CASE 4 HOVER

GUST NUMERATORS CONCLUDED:

```
 PHI/PG ;THE/DB ;PSI/DP    9.12  (.0115) (.0256) (.340)<.000917>
 THE/PG ;PHI/DA ;PSI/DP    1.69  (0) (.0230) (.338)<.0131>
 PSI/PG ;PHI/DA ;THE/DB   -.308  (.0238) (-.0242) (.327)<.578E-4>

 PHI/QG ;THE/DB ;PSI/DP    3.01  (.340)[.904;.0140]<.000201>
 THE/QG ;PHI/DA ;PSI/DP   -5.65  (.0153) (.0230) (.340)<-.000677>
 PSI/QG ;PHI/DA ;THE/DB   -.0831 (.0206) (-.234) (.338)<.000136>

 PHI/RG ;THE/DB ;PSI/DP    .0373 (.0164) (-.0452) (.617)<-.171E-4>
 THE/RG ;PHI/DA ;PSI/DP    .521  (.281)[.993;.0220]<.709E-4>
 PSI/RG ;PHI/DA ;THE/DB   -.769  (.0163) (.0213) (.281)<-.750E-4>

  XD/UG ;PHI/DA ;THE/DB   -.0134 (0) (.0217) (.259) (.998)<-.750E-4>
  XD/UG ;PHI/DA ;PSI/DP   -.0866 (.0216) (.366)[.142;3.90]<-.0104>
  XD/UG ;THE/DB ;PSI/DP    .0229 (.111) (5.00)[-.0278;.557]<.0110>

  ZD/UG ;PHI/DA ;THE/DB   -.0502 (0) (0) (.0217) (1.51)<-.00165>
  ZD/UG ;PHI/DA ;PSI/DP   -.165  (0) (0) (.0172) (1.71)<-.00486>
  ZD/UG ;THE/DB ;PSI/DP    .0980 (0) (4.87)[-.0391;.585]<.163>

  YD/VG ;PHI/DA ;THE/DB   -.0278 (0) (.0161) (.243) (.689)<-.750E-4>
  YD/VG ;PHI/DA ;PSI/DP   -.0805 (.311) (1.84)[-.122;.476]<-.0104>
  YD/VG ;THE/DB ;PSI/DP    .0912 (.0115) (.335)[.255;5.61]<.0110>

  XD/WG ;PHI/DA ;THE/DB   -.00275 (0) (0) (-.0644) (.135)<.240E-4>
  XD/WG ;PHI/DA ;PSI/DP    .663  (0) (.0203)<.0135>
  XD/WG ;THE/DB ;PSI/DP    .0103 (0) (4.73)[-.0348;.556]<.0150>

  ZD/WG ;PHI/DA ;THE/DB   -.320  (0) (.0160) (.0220) (.667)<-.750E-4>
  ZD/WG ;PHI/DA ;PSI/DP   -1.10  (.0218) (1.87)[-.113;.492]<-.0104>
  ZD/WG ;THE/DB ;PSI/DP    .640  (.0115) (4.86)[-.0339;.555]<.0110>

  XD/UG ; ZD/DC ;PHI/DA   -.254  (0) (.0269) (.309)[.192;3.72]<-.0292>
  XD/UG ; ZD/DC ;THE/DB    .0745 (0) (.765) (4.99)[-.0301;.559]<.0891>
  XD/UG ; ZD/DC ;PSI/DP    .501  (4.98)[-.0284;.550][.139;3.99]<12.0>

  YD/VG ; ZD/DC ;PHI/DA   -.236  (0) (.483) (1.85)[.0584;.373]<-.0292>
  YD/VG ; ZD/DC ;THE/DB    .239  (0) (.0172) (.621)[.296;5.90]<.0891>
  YD/VG ; ZD/DC ;PSI/DP    .919  (1.83)[-.113;.473][.266;5.59]<12.0>

  XD/UG ;PHI/DA ;THE/DB ;PSI/DP    .0294 (.0214) (.315)<.000198>
  ZD/UG ;PHI/DA ;THE/DB ;PSI/DP    .125  (0) (.0205)<.00257>
  YD/VG ;PHI/DA ;THE/DB ;PSI/DP    .0602 (.0111) (.298)<.000198>

  XD/WG ;PHI/DA ;THE/DB ;PSI/DP    .0131 (0) (.0134)<.0001764>
  ZD/WG ;PHI/DA ;THE/DB ;PSI/DP    .820  (.0109) (.0221)<.000198>
  XD/UG ;  ZD/DC ;PHI/DA ;THE/DB   .0968 (0) (.0240) (.764)<.00177>

  YD/VG ;  ZD/DC ;PHI/DA ;THE/DB   .175  (0) (.0161) (.630)<.00177>
  YD/VG ;  ZD/DC ;PHI/DA ;PSI/DP   .609  (1.85)[-.118;.480]<.260>
  XD/WG ;  ZD/DC ;PHI/DA ;THE/DB   .0105 (0) (.00117) (1.04)<.130E-4>

  XD/UG ;  ZD/DC ;PHI/DA ;THE/DB ;PSI/DP   -.204  (.0242)<-.00491>
  YD/VG ;  ZD/DC ;PHI/DA ;THE/DB ;PSI/DP   -.455  (.0108)<-.00491>
  XD/WG ;  ZD/DC ;PHI/DA ;THE/DB ;PSI/DP   -.0115 (-.0637)<.000735>
```

TABLE II-5 CONTINUED
OH-6A TRANSFER FUNCTION FACTORS

CASE 5 20KT

DENOMINATOR: (0) (.256) (.499) (2.02) (5.25)[-.0913;.458][.325;1.10]<.330>

CONTROL NUMERATORS:

PHI/DA 1.27 (0) (.489) (1.93)[-.181;.480][.511;1.07]<.318>
THE/DB -.738 (0) (.00822) (.256) (.823) (5.27)[.328;1.09]<-.00412>
PSI/DP -2.60 (.490) (2.03) (5.09)[-.169;.495][.0561;.517]<-.864>

PHI/DB .182 (0) (.270) (-.814) (1.20) (6.31)[.285;1.15]<-.204>
PHI/DP -.119 (0) (.489) (2.01)[-.0929;.500][-.108;5.16]<-.908>
PHI/DC .152 (0) (.573) (1.93)[-.121;.540][.0385;2.78]<.378>

THE/DA .638 (0) (.0233) (.286) (.871)[.316;.925]<.00172>
THE/DP -.0839 (0) (.0234) (.313) (.428) (7.48)[.884;1.58]<-.00886>
THE/DC .0891 (0) (.00596) (.272) (.726) (6.22)[.558;1.21]<.000958>

PSI/DA .176 (.487)[-.0897;.464][.968;1.68][-.862;2.40]<.100>
PSI/DB .0665 (.271) (-1.32) (5.72)[-.0228;.709][.267;1.69]<-.196>
PSI/DC .782 (.568) (2.07) (8.90)[-.182;.522][.0866;.558]<.364>

ZD/DB .848 (0) (.257) (.813) (5.28)[.328;1.09][.0886;5.25]<16.8>
YD/DA .525 (.490) (1.93)[-.138;.483][.493;1.07][.0902;8.77]<10.1>
ZD/DC -6.98 (0) (.150) (1.94) (5.25)[.340;.372][.220;1.06]<-1.67>

XD/DC -.0948 (0) (.293) (.726) (6.78)[.568;1.18][.0887;5.35]<-5.83>
YD/DP 1.55 (.490) (2.01) (-2.35) (6.35)[-.0894;.500][.294;2.26]<-29.2>
ZD/DB .676 (0) (.257) (-.886) (5.25)[.339;1.09][.258;8.07]<-8.07>

PHI/DA ;THE/DB -.942 (0) (.00668) (.836)[.521;1.03]<-.00291>
PHI/DA ;PSI/DP -3.20 (.0110) (.489) (1.91)[-.106;.498]<-.00835>
THE/DB ;PSI/DP 1.92 (.00666) (.823) (5.11)[-.0258;.538]<.00790>

PHI/DB ;PSI/DP -.865 (.0239) (.631) (6.48)[-.188;.385]<-.00580>
PHI/DP ;THE/DB .117 (0) (.00667) (.823)[.0322;8.01]<.00833>
PHI/DC ;THE/DB -.128 (0) (.00869) (.509)[.189;2.70]<-.00413>

THE/DA ;PSI/DP -1.61 (.0228) (.482)[-.515;.0674]<-.7908-8>
THE/DP ;PHI/DA -.101 (0) (-.00638) (.0226) (.490) (5.08) <.3608-8>
THE/DC ;PHI/DA .107 (0) (-.0142) (1.91)[.824;.600]<-.00104>

PSI/DA ;THE/DB -.132 (.00662) (.838) (1.32)[-.939;2.32]<-.00272>
PSI/DB ;PHI/DA .0525 (.0151) (.355) (-1.63)[.814;2.87]<-.00377>
PSI/DC ;THE/DB -.551 (.00869) (.500) (8.96)[-.0368;.579]<-.00198>

PSI/DC ;PHI/DA .918 (.0281) (.556) (1.93)[-.127;.532]<.00786>
XD/DB ;PHI/DA 1.08 (0) (.883)[.521;1.03][.0891;5.28]<18.2>
XD/DB ;PSI/DP -2.20 (.810) (5.18)[-.0258;.538][.0885;5.26]<-38.5>

YD/DA ;THE/DB -.390 (.00661) (.835)[.502;1.03][.0927;8.79]<-.0919>
YD/DA ;PSI/DP -1.68 (.490) (1.90)[-.102;.499][.0387;3.01]<-28.3>
ZD/DC ;PHI/DA -8.89 (0) (1.93)[.00503;.399][.810;1.04]<-2.97>

ZD/DC ;THE/DB 5.07 (0) (.00682) (.231) (5.25)[.277;1.01]<.0842>
ZD/DC ;PSI/DP 18.2 (1.95) (5.10)[-.135;.480][.181;.529]<11.7>
XD/DC ;PHI/DA -.121 (0) (1.91)[.835;.581][.0664;5.39]<-2.25>

XD/DC ;THE/DB -.00597 (0) (.0573) (.726) (-8.61)[.525;3.07]<.0202>
XD/DC ;PSI/DP .285 (.791) (5.92)[-.0368;.486][.156;8.35]<5.98>
YD/DP ;PHI/DA 2.05 (.485) (.693) (-.801) (1.95)[-.0306;.512]<-.282>

YD/DP ;THE/DB -1.11 (.00665) (.823) (-2.55) (6.35)[.323;2.27]<.267>
ZD/DP ;PHI/DA .885 (0) (-.886)[.551;1.05][.217;4.10]<-7.08>
ZD/DP ;PSI/DP -1.75 (-.815) (5.11)[-.0426;.527][.239;4.08]<17.2>

PHI/DA ;THE/DB ;PSI/DP 2.88 (.00672) (.0109) (.429) <.7687-8>
PHI/DC ;THE/DB ;PSI/DP .285 (.00766) (-.0882) (.798) <-.0001132>
THE/DC ;PHI/DA ;PSI/DP -.201 (.0108) (-.0149) (.810) <.2652-8>

TABLE II-5 CONTINUED

OH-6A TRANSFER FUNCTION FACTORS

CASE 5 20KT

CONTROL NUMERATORS CONCLUDED:

```
PSI/DC ;PHI/DA ;THE/DB  -.684 (.00782) (.0327) (.482)<-.8438-6>

 ID/DP ;PHI/DA ;PSI/DP  -2.78 (.0110) (.435)[.0487;5.29 ]<-.372>
 ID/DA ;THE/DB ;PSI/DP   1.22 (.00667) (.426)[.0426;8.01]<.223>
 ID/DC ;PHI/DA ;THE/DB   6.52 (0) (0)[.487;.981 ]<5.77>

 ID/DC ;THE/DB ;PSI/DP  -13.3 (.00289) (5.12)[-.0291;.583]<-.0500>
 ID/DC ;PHI/DA ;PSI/DP   23.0 (.0157) (1.85)[.00914;.482]<.155>
 ID/DC ;PHI/DA ;THE/DB   .0205 (0) (.982) (1.34)<.0671>

 ID/DC ;PHI/DA ;PSI/DP   .360 (.0111) (.790)[.153;4.29 ]<.0583>
 ID/DC ;THE/DB ;PSI/DP  -.0665 (1.54) (6.75)[-.0856;.513]<-.182>
 YD/DP ;PHI/DA ;THE/DB  -1.52 (.00469) (.353) (-.825) (.876)<.00259>

 ID/DB ;PHI/DA ;PSI/DP  -2.18 (.0103) (-.394)[.205;4.09 ]<.188>

 ID/DC ;PHI/DA ;THE/DB ;PSI/DP  -16.9 (.00442) (.0128)<-.000959>
 ID/DC ;PHI/DA ;THE/DB ;PSI/DP  -.0947 (.0107) (1.69)<-.00172>
```

GUST NUMERATORS:

```
 PHI/DG   .0111 (0) (0) (0) (.575)[.685;2.27]<.0397>
 THE/DG  -.0185 (0) (0) (.255) (.479) (5.30)[.278;1.04 ]<-.0103>
 PSI/DG   .0221 (0) (0) (.575) (1.67) (5.34)[-.0856;.578]<.0385>

 PHI/VG   .0481 (0) (0) (.607) (1.02) (1.86)[-.0622;.650]<.0103>
 THE/VG   .0160 (0) (0) (0) (.181) (-.258) (.363)<-.000212>
 PSI/VG  -.0249 (0) (0) (.581) (1.94) (7.14)[-.0952;.847]<-.0372>

 PHI/WG   .00515 (0) (0) (1.77)[-.155;.649]U[.0820;1.68]<.0108>
 THE/WG   .00368 (0) (0) (-.0103) (.265) (5.87)[.376;1.13]<-.7588-6>
 PSI/WG   .00793 (0) (2.38) (8.14)[-.187;.581]U[.0797;.689]<.0108>

 PHI/PG   5.21 (0) (.529) (2.00)[-.0929;.681]U[.672;1.09]<1.28>
 THE/PG  -.305 (0) (.137) (-.218) (.359) (1.38)[-.191;1.25]<.00682>
 PSI/PG   1.15 (.539)[-.0968;.687]U[-.460;1.69]U[.993;1.88]<1.21>

 PHI/QG   1.15 (0) (.332) (1.47)[-.680;.955]U[.388;8.33]<.912>
 THE/QG   1.88 (0) (.0180) (.259) (.822) (5.55)[.380;1.09]<.0186>
 PSI/QG   .124 (.331) (-3.10) (-4.81)[-.0695;.581]U[.654;2.16]<.872>

 PHI/RG   .105 (0) (.503) (2.28)[-.0937;.688]U[.182;3.72]<.387>
 THE/RG  -.121 (0) (0) (.0989) (.362) (4.93)[-.0110;.621]<-.00822>
 PSI/RG   1.07 (.540) (1.95) (5.10)[-.0919;.842]U[-.0307;.581]<.330>

 ID/DG    .0214 (0) (.251) (.482) (5.32)[.272;1.05]U[.104;4.66]<.330>
 ID/DG    .201 (0) (0) (.233) (5.25)[.497;1.08]U[.819;1.10]<.386>
 YD/VG    .0516 (0) (.592) (1.20) (1.77)[-.0616;.650]U[.340;5.02]<.330>

 YD/WG   -.0106 (0) (0) (.279) (5.80)[.385;1.13]U[.176;3.38]<-.286>
 ID/WG    .426 (0) (.248) (2.12) (5.24)[-.102;.681]U[.338;1.10]<.330>

PHI/DG ;THE/DB    .00252 (0) (0) (.326) (-1.95) (3.98)<-.00633>
PHI/DG ;PSI/DP   -.0165 (0) (0) (-.0933) (.571)<.00195>
THE/DG ;PHI/DA   -.0185 (0) (0) (.476)[.425;1.06 ]<-.00986>

THE/DG ;PSI/DP    .0397 (0) (.472) (5.22)[-.0197;.528]<.0269>
PSI/DG ;PHI/DA    .0281 (0) (0) (.0402) (.577) (1.60)<.00105>
PSI/DG ;THE/DB   -.0154 (0) (.330) (5.34)[.0421;.474 ]<-.00609>

PHI/VG ;THE/DB   -.0326 (0) (0) (.00815) (.650) (1.07)<-.000128>
PHI/VG ;PSI/DP   -.118 (0) (.481) (1.90)[-.105;.899]<-.0249>
THE/VG ;PHI/DA   -.000718 (0) (0) (.0214) (.420) (8.09)<-.5348-6>

THE/VG ;PSI/DP   -.0627 (0) (0) (0) (.380)<-.0238>
PSI/VG ;PHI/DA   -.0194 (0) (.506) (1.90)[-.109;.896]<-.00912>
PSI/VG ;THE/DB    .0182 (0) (0) (.00600) (.438) (7.09)<.000339>
```

TABLE II-5 CONTINUED

OH-6A TRANSFER FUNCTION FACTORS

CASE 5 20KT

GUST NUMERATORS CONTINUED:

```
PHI/WG ;THE/DB  -.00446 (0) (0) (.0152)[.254;1.63]<-.000181>
PHI/WG ;PSI/DP  -.0123 (0) (-.283) (1.40)[-.245;.563]<.00154>
THE/WG ;PHI/DA   .00487 (0) (0) (-.0268)[.653;1.04]<-.000129>

THE/WG ;PSI/DP  -.00992 (0) (-.0290) (5.68)[-.0484;.493]<.000357>
PSI/WG ;PHI/DA   .00918 (0) (.0859) (2.08)[-.105;.624]<.000639>
PSI/WG ;THE/DB  -.00607 (0) (.0148) (4.39)[.0441;.676]<-.000180>

PHI/PG ;THE/DB  -1.77 (0) (.00605) (.437)[.494;1.09]<-.0118>
PHI/PG ;PSI/DP  -13.4 (.0140) (.500) (2.00)[-.102;.488]<-.0447>
THE/PG ;PHI/DA  -.613 (0) (0) (.434)[.465;1.04]<-.289>

THE/PG ;PSI/DP   .891 (0) (.376) (1.36)[-.466;1.30]<.771>
PSI/PG ;PHI/DA   .548 (-.330)[.883;.120][.959;1.21]<-.00384>
PSI/PG ;THE/DB  -.825 (.00602) (.438) (1.76)[-.459;1.70]<-.0110>

PHI/QG ;THE/DB  -1.19 (0) (0) (.417)[.509;1.07]<-.565>
PHI/QG ;PSI/DP  -2.99 (-.0256) (.261) (.969)[-.508;.742]<.0107>
THE/QG ;PHI/DA   2.34 (0) (.0122) (.433)[.524;1.03]<.0132>

THE/QG ;PSI/DP  -4.88 (.0123) (.422) (5.41)[-.0248;.512]<-.0359>
PSI/QG ;PHI/DA  -.0456 (.0193) (.352) (-2.47)[.166;3.98]<.0121>
PSI/QG ;THE/DB  -.216 (0) (.417) (1.56)[-.618;1.94]<-.529>

PHI/RG ;THE/DB  -.0549 (0) (.00814) (.439)[.0582;4.69]<-.00432>
PHI/RG ;PSI/DP  -.123 (-.0144) (.678) (5.68)[-.125;.372]<.000949>
THE/RG ;PHI/DA  -.158 (0) (.0215) (.430)[-.0101;1.11]<-.00180>

THE/RG ;PSI/DP   .404 (.0215) (.379) (5.11)[-.0287;.538]<.00486>
PSI/RG ;PHI/DA   1.35 (.0132) (.531) (1.85)[-.0946;.450]<.00352>
PSI/RG ;THE/DB  -.780 (.00814) (.437) (5.12)[-.0289;.538]<-.00412>

XD/UG ;PHI/DA   .0272 (0) (.478)[.420;1.06][.102;4.67]<.318>
XD/UG ;THE/DB  -.00339 (0) (.282) (1.33) (5.42)[.242;.772]<-.00412>
XD/UG ;PSI/DP  -.0545 (.473) (5.25)[-.0196;.524][.0840;4.82]<-.864>

ZD/UG ;PHI/DA   .255 (0) (0)[.648;.856][.737;1.34]<.334>
ZD/UG ;THE/DB  -.137 (0) (0) (.261) (5.26)[.382;1.16]<-.255>
ZD/UG ;PSI/DP  -.520 (0) (5.10)[-.0450;.510][.863;1.15]<-.906>

YD/VG ;PHI/DA   .0424 (0) (1.94)[.0645;.432][.735;.478]<.00352>
YD/VG ;THE/DB  -.0380 (0) (.00815) (.448) (1.18)[.332;5.02]<-.00412>
YD/VG ;PSI/DP  -.0956 (.487) (1.88)[-.102;.499][.186;6.30]<-.864>

XD/WG ;PHI/DA  -.0135 (0) (0)[.674;1.03][.171;3.25]<-.152>
XD/WG ;THE/DB   .00468 (0) (0) (.191) (5.69)[.308;1.16]<.00681>
XD/WG ;PSI/DP   .0281 (0) (5.58)[-.0497;.493][.211;3.23]<.398>

ZD/WG ;PHI/DA   .542 (0) (2.01)[-.145;.507][.528;1.07]<.318>
ZD/WG ;THE/DB  -.316 (0) (.00816) (.252) (5.28)[.338;1.10]<-.00412>
ZD/WG ;PSI/DP  -1.11 (2.13) (5.09)[-.167;.507][.0300;.529]<-.864>

XD/UG ; ZD/DC  -.130 (0) (.176) (5.12)[.118;.823][.120;4.57]<-1.67>
YD/VG ; ZD/DC  -.343 (0) (.304) (1.95)[.547;.542][.328;5.29]<-1.67>

PHI/UG ;THE/DB ;PSI/DP  -.00905 (0) (.0240) (.771)<-.000168>
THE/UG ;PHI/DA ;PSI/DP   .0501 (0) (.0110) (.473)<.000260>
PSI/UG ;PHI/DA ;THE/DB  -.0202 (0) (.0151) (.383)<-.000117>

PHI/VG ;THE/DB ;PSI/DP   .0879 (0) (.00666) (.419)<.000245>
THE/VG ;PHI/DA ;PSI/DP  -.00122 (0) (.0232) (-.0866)<.246E-5>
PSI/VG ;PHI/DA ;THE/DB   .0292 (0) (.00662) (.438)<.846E-4>

PHI/WG ;THE/DB ;PSI/DP   .0107 (0) (.00755) (-.202)<-.161E-4>
THE/WG ;PHI/DA ;PSI/DP  -.0108 (0) (.0108) (-.0285)<.331E-5>
PSI/WG ;PHI/DA ;THE/DB  -.00698 (0) (.00783) (.135)<-.737E-5>
```

TABLE II-5 CONTINUED

OH-6A TRANSFER FUNCTION FACTORS

CASE 5 20KT

GUST NUMERATORS CONCLUDED:

PHI/PG ;THE/DR ;PSI/DP 9.70 (.00755) (.0130) (.430)<.000409>
THE/PG ;PHI/DA ;PSI/DP 1.63 (0) (.0109) (.423)<.00749>
PSI/PG ;PHI/DA ;THE/DB -.381 (.00912) (-.0222) (.439)<.1388-4>

PHI/DG ;THE/DP ;PSI/DP 3.07 (.820)[.642;.00991]<.000127>
THE/DG ;PHI/DA ;PSI/DP -6.[illegible] (.0113) (.0119) (.426)<-.000148>
PSI/DG ;PHI/DA ;THE/DB -.0629 (.0342) (-.0676) (.312)<.4548-4>

PHI/RG ;THE/DB ;PSI/DP .0187 (.0105) (-.129) (1.58)<-.1908-4>
THE/RG ;PHI/DA ;PSI/DP .515 (.0109) (.0215) (.389)<.4698-4>
PSI/RG ;PHI/DA ;THE/DB -.991 (.00996) (.0128) (.437)<-.5368-4>

ZD/DG ;PHI/DA ;THE/DB -.00448 (0) (1.08)[.561;.775]<-.002913>
ZD/DG ;PHI/DA ;PSI/DP -.0689 (.0110) (.474)[.0826;8.83]<-.008835>
ZD/DG ;THE/DB ;PSI/DP .00655 (.907) (5.63)[-.0268;.517]<.007903>

ZD/TG ;PHI/DA ;THE/DB -.177 (0) (0)[.566;1.12]<-.222>
ZD/DG ;PHI/DA ;PSI/DP -.658 (0) (.0111)[.830;1.10]<-.008763>
ZD/DG ;THE/DB ;PSI/DP .357 (0) (5.12)[-.0380;.545]<.5827>

YD/YG ;PHI/DA ;THE/DB -.0318 (0) (.00913)[.953;.832]<-.5368-4>
YD/YG ;PHI/DA ;PSI/DP -.0862 (.172) (1.92)[-.101;.503]<-.008835>
YD/YG ;THE/DB ;PSI/DP .0710 (.00666) (.829)[.181;6.30]<.007903>

XD/WG ;PHI/DA ;THE/DB .00623 (0) (0)[.881;1.07]<.007113>
XD/WG ;PHI/DA ;PSI/DP .0358 (0) (.0112)[.220;3.11]<.003913>
XD/WG ;THE/DB ;PSI/DP -.0111 (0) (5.83)[-.0139;.528]<-.01953>

ZD/WG ;PHI/DA ;THE/DB -.805 (0) (.00659)[.532;1.05]<-.002913>
ZD/WG ;PHI/DA ;PSI/DP -1.40 (.0111) (2.00)[-.129;.520]<-.008835>
ZD/WG ;THE/DB ;PSI/DP .823 (.00661) (5.13)[-.0115;.532]<.007903>

XD/DG ; ZD/DC ;PHI/DA -.166 (0)[.222;.923]X.119;6.58]<-2.97>
YD/DG ; ZD/DC ;THE/DB .0285 (0) (1.66) (8.82)[-.231;.875]<.0842>
XD/DG ; ZD/DC ;PSI/DP .125 (5.16)[-.0222;.540]X.0699;8.89]<11.7>

YD/YG ; ZD/DC ;PHI/DA -.273 (0) (.00958) (1.90)[.286;.625]<-.001913>
YD/YG ; ZD/DC ;THE/DB .250 (0) (.00659) (.955)[.319;5.30]<.0842>
YD/YG ; ZD/DC ;PSI/DP .688 (1.91)[.00869;.487]X.192;6.28]<11.7>

XD/DG ;PHI/DA ;THE/DB ;PSI/DP .00870 (.0110) (.802)<.7688-4>
ZD/DG ;PHI/DA ;THE/DB ;PSI/DP .455 (0) (.0101)<.004683>
YD/YG ;PHI/DA ;THE/DB ;PSI/DP .0143 (.00669) (.319)<.7688-4>

XD/WG ;PHI/DA ;THE/DB ;PSI/DP -.0171 (0) (.0107)<-.0001843>
ZD/WG ;PHI/DA ;THE/DB ;PSI/DP 1.05 (.00668) (.0110)<.7688-4>
XD/DG ; ZD/DC ;PHI/DA ;THE/DB .0312 (0) (.116) (1.13)<.004083>

YD/YG ; ZD/DC ;PHI/DA ;THE/DB .200 (0) (.0117) (.185)<.0009003>
YD/YG ; ZD/DC ;PHI/DA ;PSI/DP .117 (1.87)[-.0261;.496]<.1553>
YD/WG ; ZD/DC ;PHI/DA ;THE/DB -.0426 (0)[.239;1.25]<-.06713>

XD/DG ; ZD/DC ;PHI/DA ;THE/DB ;PSI/DP -.0428 (.0224)<-.0009593>
YD/YG ; ZD/DC ;PHI/DA ;THE/DB ;PSI/DP -.249 (.00385)<-.0009593>
XD/WG ; ZD/DC ;PHI/DA ;THE/DB ;PSI/DP .160 (.0108)<.001723>

MICROFILMED FROM
BEST AVAILABLE COPY

TABLE II-5 CONTINUED
OH-6A TRANSFER FUNCTION FACTORS

CASE 7 40 KT

DENOMINATOR: (0) (.0811) (.949) (2.07) (5.57) [.00412;.847][.212;1.98]<.419>

CONTROL NUMERATORS:

PHI/DA 1.27 (0) (.852) (2.11) [-.00998;.371][.262;1.95]<1.19>
THE/DB -.727 (0) (.0159) (.0807) (.640) (5.57) [.217;2.00]<-.0133>
PSI/DP -2.25 (.741) (2.18) (5.41) [-.241;.437][.231;.497]<-.932>

PHI/DB .199 (0) (.147) (-.200) (2.62) (5.15) [.170;1.94]<-.298>
THE/DA .603 (0) (.0176) (.0618) (.663) [.321;1.70]<.00126>

PHI/DA ;THE/DB -.932 (0) (.0159) (.647) [.276;1.96]<-.0368>
PHI/DA ;PSI/DP -2.83 (.0137) (.751) (2.14) [-.0481;.410]<-.0104>
THE/DP ;PSI/DP 1.69 (.0147) (.626) (5.42) [-.0156;.552]<.0250>

PHI/DB ;PSI/DP -.434 (.0279) (1.43) (6.10) [-.172;.196]<-.00404>
PHI/DP ;THE/DB .0888 (0) (.0147) (.620) [.0943;8.05]<.0526>
PHI/DC ;THE/DB -.137 (0) (.0146) (1.00) [.196;3.74]<-.0280>

THE/DA ;PSI/DP -1.26 (.0327) (.581) (-.774) (.816)<.0151>
THE/DP ;PHI/DA -.577 (0) (.0327) (.612) (2.76)<-.0319>
THE/DC ;PHI/DA .216 (0) (.0260) (.815) [.378;2.38]<.0259>

PSI/DA ;THE/DB -.150 (.0159) (.650) (2.00) [-.524;2.37]<-.0174>
PSI/DB ;PHI/DA .129 (.0201) (.315) (-.531) [-.00375;3.05]<-.00404>
XD/DB ;PHI/DA 1.06 (0) (.631) [.177;1.97][.0699;5.37]<78.4>

YD/DA ;THE/DB -.370 (.0159) (.686) [.256;1.95][.0479;9.04]<-1.18>
ZD/DB ;PHI/DA 1.39 (0) (-.0593) [.284;1.99][.246;5.34]<-9.29>
XD/DC ;PHI/DA -.181 (0) (.813) [.390;2.45][-.0615;6.02]<-32.2>

YD/DP ;THE/DB -.976 (.0147) (.622) (-3.26) (6.93) [.331;2.89]<1.69>
ZD/DC ;PHI/DA -9.59 (0) (.162) [.964;1.30][.156;1.86]<-9.08>

PHI/DA ;THE/DB ;PSI/DP 2.08 (.00939) (.0172) (.634)<.000214>
PHI/DC ;THE/DB ;PSI/DP .256 (.0147) (-.0515) (1.45)<-.000280>
THE/DC ;PHI/DA ;PSI/DP -.467 (-.0115) (.0277) (.794)<.000118>

PSI/DC ;PHI/DA ;THE/DB -.538 (.0153) (.0434) (.868)<-.000310>
XD/DB ;PHI/DA ;PSI/DP -2.35 (.0129) (.624) [.0683;5.38]<-.545>
YD/DA ;THE/DB ;PSI/DP 1.04 (.0139) (.632) [.0205;8.04]<.587>

ZD/DC ;PHI/DA ;THE/DB 6.80 (0) (.0200) [.253;1.88]<.483>
ZD/DC ;PHI/DA ;PSI/DP 21.4 (.0217) (1.62) [.671;.947]<.151>
XD/DC ;PHI/DA ;THE/DB -.0467 (0) (1.26) [.586;3.26]<-.626>

XD/DC ;PHI/DA ;PSI/DP .441 (-.00486) (.797) [.0132;5.84]<-.0584>
YD/DP ;PHI/DA ;THE/DB -1.30 (.0127) (.527) (-1.22) (1.37)<.0144>
ZD/DB ;PHI/DA ;PSI/DP -3.10 (.0123) (-.0538) [.233;5.36]<.0589>

ZD/DC ;PHI/DA ;THE/DB ;PSI/DP -15.2 (.00639) (.0250)<-.00243>
XD/DC ;PHI/DA ;THE/DB ;PSI/DP .0633 (-.0342) (2.30)<-.00498>

TABLE II-5 CONTINUED

OH-6A TRANSFER FUNCTION FACTORS

CASE 8 60KT

DENOMINATOR: (0) (.0636) (5.72) [.0426;.287] [.985;1.66] [.223;2.63] <.569>
S R P SP D

CONTROL NUMERATORS:

PHI/DA	1.26	(0) (1.39)	(1.86)	[.0518;.303]	[.268;2.59]	<2.00>
THE/DB	-.742	(0) (.0216)	(.0625)	(.734)	(5.70)	[.215;2.68]<-.0300>
PSI/DP	-2.67	(.870)	(2.22)	(5.49)	[-.347;.395]	[.402;.500]<-1.10>
PHI/DB	.187	(0) (-.117)	(.119)	[.169;2.49]	[.882;4.94]	<-.395>
PHI/DP	-13.1	(0) (.609)	(2.28)	[-.122;.437]<-3.48>		
PHI/DC	.126	(0) (.526)	(3.03)	[-.415;.631]	[.0168;4.77]	<1.81>
THE/DA	.479	(0) (.0306)	(-.0594)	(.781)	[.468;2.12]<-.00305>	
THE/DP	-.849	(0) (.702)	[.997;.0390]	[.952;5.63]<-.0286>		
THE/DC	.287	(0) (.0281)	(.0524)	(.912)	(5.83)	[.256;3.18]<.0227>
PSI/DA	.187	(1.08)	[.0537;.301]	[.911;2.20]	[-.647;2.68]<.432>	
PSI/DB	.164	(.120)	(-.122)	(5.50)	[.238;1.08]	[-.208;2.87]<-.126>
PSI/DC	.455	(.618)	(3.63)	(4.96)	[-.544;.480]	[.409;.703]<.577>
XD/DB	.793	(0) (.0626)	(.734)	(5.68)	[.213;2.69]	[.0661;5.47]<44.8>
YD/DA	.502	(1.47)	(1.76)	[.0548;.303]	[.237;2.57]	[.0526;9.02]<64.0>
ZD/DC	-8.29	(0) (5.75)	[.981;.0647]	[.690;2.26]	[.0991;2.50]<-6.37>	
XD/DC	-.131	(0) (.0548)	(.921)	(6.02)	[.267;3.21]	[-.0753;8.12]<-27.2>
YD/DP	1.59	(.646)	(2.16)	(-3.44)	(7.38)	[-.111;.445] [.374;3.16]<-112.>
ZD/DB	1.83	(0) (.0102)	(.0633)	(5.69)	[.206;2.70]	[.268;5.45]<1.47>
PHI/DA ;THE/DB	-.941	(0) (.0218)	(.743)	[.269;2.66]<-.108>		
PHI/DA ;PSI/DP	-3.34	(.0207)	(.946)	(2.24)	[-.0330;.339]<-.0168>	
THE/DB ;PSI/DP	1.98	(.0208)	(.710)	(5.49)	[-.0134;.569]<.0519>	
PHI/DB ;PSI/DP	-.481	(.0594)	(2.81)	(5.62)	[-.439;.0917]<-.00379>	
PHI/DP ;THE/DB	11.3	(0) (.0208)	(.696)<.164>			
PHI/DC ;THE/DB	-.147	(0) (.0207)	(1.28)	[.214;8.53]<-.0798>		
THE/DA ;PSI/DP	-1.16	(.0333)	(.692)	(-1.13)	(1.24)<.0378>	
THE/DP ;PHI/DA	-1.06	(0) (.0333)	(.705)	(4.83)<-.119>		
THE/DC ;PHI/DA	.356	(0) (.0288)	(.894)	[.302;3.11]<.0897>		
PSI/DA ;THE/DB	-.146	(.0218)	(.748)	(2.01)	[-.610;2.66]<-.0341>	
PSI/DB ;PHI/DA	.171	(.0358)	(-.222)	(.273)	[-.180;3.32]<-.00409>	
PSI/DC ;THE/DB	-.385	(.0207)	(1.10)	(5.22)	[-.0653;.744]<-.0254>	
PSI/DC ;PHI/DA	.549	(.0555)	(.752)	(3.45)	[-.207;.432]<.0148>	
XD/DB ;PHI/DA	1.00	(0) (.710)	[.266;2.68]	[.0754;5.50]<159.>		
XD/DB ;PSI/DP	-2.11	(.719)	(5.49)	[-.0216;.567]	[.0600;5.48]<-80.3>	
YD/DA ;THE/DB	-.377	(.0218)	(.742)	[.239;2.61]	[.0561;9.05]<-3.45>	
YD/DA ;PSI/DP	-1.64	(.926)	(2.20)	[.00786;.346]	[.00795;8.07]<-26.0>	
ZD/DC ;PHI/DA	-10.4	(0) (.0807)	[.706;2.24]	[.137;2.42]<-24.7>		
ZD/DC ;THE/DB	5.63	(0) (.0227)	(.0568)	(5.71)	[.198;2.59]<.277>	
ZD/DC ;PSI/DP	22.2	(.216)	(5.51)	[-.0610;.426]	[.701;1.68]<13.5>	
XD/DC ;PHI/DA	-.160	(0) (.895)	[.297;3.20]	[-.0969;8.26]<-100.>		
XD/DC ;THE/DB	-.111	(0) (.0680)	(.734)	(4.92)	[.305;3.34]<-.359>	
XD/DC ;PSI/DP	.377	(.795)	(5.68)	[.0564;.450]	[-.0440;8.00]<22.0>	
YD/DP ;PHI/DA	2.06	(.291)	(-1.25)	[-.553;.586]	[.958;2.57]<-1.70>	
YD/DP ;THE/DB	-1.18	(.0209)	(.699)	(-1.86)	(7.35)	[.329;1.28]<5.26>
ZD/DB ;PHI/DA	2.30	(0) (.011)	[.263;2.70]	[.263;5.45]<5.67>		
ZD/DB ;PSI/DP	-4.90	(.0122)	(5.49)	[-.0340;.564]	[.247;5.44]<-3.09>	
PHI/DA ;THE/DB ;PSI/DP	2.50	(.0149)	(.0245)	(.726)<.000661>		
PHI/DC ;THE/DB ;PSI/DP	.351	(.0207)	(-.0329)	(1.83)<-.000439>		
THE/DC ;PHI/DA ;PSI/DP	-.952	(-.00517)	(.0309)	(.940)<.000128>		

TABLE II-5 CONTINUED
OH-6A TRANSFER FUNCTION FACTORS

CASE 8 60KT

CONTROL NUMERATORS CONCLUDED:

```
  PSI/DC ;PHI/DA ;THE/DB  -.459 (.0209) (.0615) (1.04)<-.000611>

  XD/DB ;PHI/DA ;PSI/DP  -2.66  (.0189) (.723)[.0708;5.50 ]<-1.10>
  YD/DA ;THE/DB ;PSI/DP   1.24  (.0206) (.722)[.0125;8.05 ]<1.19>
  ZD/DC ;PHI/DA ;THE/DB   7.15  (0) (.0230)[.257;2.56 ]<1.08>

  ZD/DC ;THE/DB ;PSI/DP  -15.0  (.0209) (5.51)[-.0235;.586 ]<-.591>
  ZD/DC ;PHI/DA ;PSI/DP   27.7  (.0259) (.107)[.726;1.62 ]<.203>
  XD/DC ;PHI/DA ;THE/DB  -.165  (0) (.889)[.289;3.43 ]<-1.72>

  XD/DC ;PHI/DA ;PSI/DP   .459  (0) (.841)[-.0665;8.15 ]<25.7>
  XD/DC ;THE/DB ;PSI/DP   .329  (.271) (5.05)[.404;.372 ]<.0623>
  YD/DP ;PHI/DA ;THE/DB  -1.54  (.0194) (.604) (-1.83) (2.0 )<.0669>

  ZD/DB ;PHI/DA ;PSI/DP  -6.11 [.983;.0159 ][.245;5.46 ]<-.0463>

  ZD/DC ;PHI/DA ;THE/DB ;PSI/DP  -19.0  (.0152) (.0299)<-.00833>
  XD/DC ;PHI/DA ;THE/DB ;PSI/DP   .414  (-.0246) (.778)<-.00792>
```

GUST NUMERATORS:

```
  PHI/UG   .00285  (0) (0) (0)[.436;2.51 ][.692;4.78 ]<.409>
  THE/UG  -.0103  (0) (0) (.0639) (.760) (5.58)[.199;2.50 ]<-.0177>
  PSI/UG   .00785  (0) (0) (5.48)[-.0333;.924 ][.555;1.89 ]<.131>

  PHI/VG   .0501  (0) (0) (2.74)[.109;.317 ][.660;1.13 ]<.0177>
  THE/VG   .0170  (0) (0) (0) (.0199) (.431) (.561) (6.10)<.000497>
  PSI/VG  -.0644  (0) (0) (6.37)[.0599;.284 ][.943;1.61 ]<-.0855>

  PHI/WG   .0246  (0) (0) (2.29)[-.0598;.391 ][.210;3.35 ]<.0974>
  THE/WG   .00428  (0) (0) (.0260) (.0427) (6.82)[.371;1.78 ]<.000463>
  PSI/WG   .0259  (0) (2.86) (4.28)[-.0801;.396 ][.0757;.791 ]<.0312>

  PHI/PG   5.50  (0)[.0632;.284 ][.975;1.69 ][.269;2.62 ]<8.72>
  THE/PG  -.181  (0) (.0199) (.416) (.552) (3.01)[-.644;2.53 ]<-.0160>
  PSI/PG   1.12  (2.53)[.0606;.284 ][.931;1.54 ][-.458;2.25 ]<2.76>

  PHI/QG   1.30  (0) (.197) (-.278) (-2.09) (3.19)[.237;2.63 ]<3.31>
  THE/QG   2.46  (0) (.0242) (.0599) (.709) (5.82)[.226;2.62 ]<.101>
  PSI/QG  -.533  (.197) (-.257) (7.45)[-.0531;.847 ][.300;2.69 ]<1.05>

  PHI/RG   .0823  (0)[.0386;.311 ][.947;1.55 ][.299;9.66 ]<1.79>
  THE/RG   11831.  (.00144) (.0187)<.319>
  PSI/RG   1.45  (5.53)[.0381;.319 ][.00147;.528 ][.964;1.58 ]<.569>

  XD/UG   .0317  (0) (.0641) (.707) (5.67)[.228;2.36 ][.286;3.54 ]<.569>
  ZD/UG   .0440  (0) (0) (.0637) (5.67)[.213;2.38 ][.345;4.45 ]<1.79>
  YD/VG   .0852  (0) (2.80)[.113;.317 ][.609;1.22 ][.482;4.00 ]<.569>

  XD/WG  -.00177  (0) (0) (.0462) (9.20)[.530;3.95 ][-.0615;4.97 ]<-.618>
  ZD/WG   .713  (0) (.0637) (2.46) (5.65)[-.0474;.351 ][.259;2.69 ]<.569>

  PHI/UG ;THE/DB  -.0234  (0) (0) (.524)<-.0123>
  PHI/UG ;PSI/DP  -.00677  (0) (0) (-.0828) (2.86) (5.25)<.00431>
  THE/UG ;PHI/DA  -.0130  (0) (0) (.764)[.252;2.50 ]<-.0622>

  THE/UG ;PSI/DP   .0274  (0) (.714) (5.49)[-.00534;.565 ]<.0343>
  PSI/UG ;PHI/DA   .00933  (0) (0) (.118)[.477;2.01 ]<.00446>
  PSI/UG ;THE/DB  -.00414  (0) (.583) (5.46)[.0619;.545 ]<-.00191>

  PHI/VG ;THE/DB  -.0403  (0) (0) (.0215) (.935) (1.15)<-.000933>
  PHI/VG ;PSI/DP  -.141  (0) (.573) (2.31)[-.139;.429 ]<-.0343>
  THE/VG ;PHI/DA   .0193  (0) (0) (.664)[.829;.0861 ]<.9992-4>

  THE/VG ;PSI/DP  -.0449  (0) (0) (.0279) (.700) (6.01)<-.00527>
  PSI/VG ;PHI/DA  -.0903  (0)[.3503;.303 ][.972;1.54 ]<-.0197>
  PSI/VG ;THE/DB   .0450  (0) (0) (.0215) (.743) (6.43)<.00462>
```

TABLE II-5 CONTINUED
OH-6A TRANSFER FUNCTION FACTORS

CASE 8 60KT

GUST NUMERATORS CONTINUED:

```
 PHI/WG ;THE/DA  -.0191 (0) (0) (.0214)[ .202;3.88 ]<-.00482>
 PHI/WG ;PSI/DP  -.0629 (0) (-.0672) (2.26)[ -.0462;.390 ]<.00147>
 THE/WG ;PHI/DA   .00435 (0) (0) (.0285)[ .392;4.16 ]<.00215>

 THE/WG ;PSI/DP  -.0116 (0) (.0478) (.375) (-.506) (6.35)<.000671>
 PSI/WG ;PHI/DA   .0280 (0) (.127) (2.61)[ -.0327;.376 ]<.00132>
 PSI/WG ;THE/DB  -.0199 (0) (.0214) (4.59)[ .00227;.887 ]<-.00154>

 PHI/PG ;THE/DP  -4.05 (0) (.0215) (.742)[ .265;2.70 ]<-.471>
 PHI/PG ;PSI/DP  -14.6 (.0221) (1.05) (2.21)[ -.0269;.322 ]<-.0775>
 THE/PG ;PHI/DA  -.457 (0) (.00460) (.748)[ .249;2.46 ]<-.00951>

 THE/PG ;PSI/DP   .475 (.0279) (.700) (2.70)[ -.444;2.61 ]<.170>
 PSI/PG ;PHI/DA   .341 (-.0700)[ .540;.155 ][ .545;1.95 ]<-.00242>
 PSI/PG ;THE/DB  -.803 (.0215) (.746) (2.28)[ -.456;2.25 ]<-.149>

 PHI/QG ;THE/DB  -1.43 (0) (.0202) (.577)[ .298;2.51 ]<-.105>
 PHI/QG ;PSI/DP  -3.54 (.00985) (.194) (-.393) (-1.51) (2.45)<-.00983>
 THE/QG ;PHI/DA   3.04 (0) (.0247) (.722)[ .268;2.62 ]<.373>

 THE/QG ;PSI/DP  -6.58 (.0223) (.704) (5.61)[ -.0113;.497 ]<-.143>
 PSI/QG ;PHI/DA  -.915 (.0466) (-.150) (.206)[ .118;2.60 ]<.0103>
 PSI/QG ;THE/DB   1.56 (.0202) (.519) (-1.23) (1.64)<-.0330>

 PHI/RG ;THE/DB  -5.68 (0) (.0215) (.773)<-.0985>
 PHI/RG ;PSI/DP  -1.12 (-.0986) (2.60)[ .267;.118 ]<.00400>
 THE/RG ;PHI/DA  -.367 (0) (.0658) (-.694)[ .910;.757 ]<.00961>

 THE/RG ;PSI/DP   .761 (.0305) (.693) (5.52)[ -.0257;.568 ]<.0286>
 PSI/RG ;PHI/DA   1.81 (.0273)[ .0833;.305 ][ .976;1.54 ]<.0110>
 PSI/RG ;THE/DB  -1.03 (.0215) (.758) (5.53)[ -.0230;.568 ]<-.0300>

  XD/UG ;PHI/DA   .0400 (0) (.708)[ .272;2.39 ][ .290;3.52 ]<2.00>
  XD/UG ;THE/DP  -.0154 (0) (.0628) (.734) (5.66)[ .228;2.73 ]<-.0300>
  XD/UG ;PSI/DP  -.0842 (.713) (5.49)[ -.0354;.558 ][ .286;3.28 ]<-1.10>

  ZD/UG ;PHI/DA   .0553 (0) (0)[ .261;2.41 ][ .348;4.43 ]<6.30>
  ZD/UG ;THE/DB  -.0138 (0) (0) (.0673) (5.67)[ .296;3.04 ]<-.0889>
  ZD/UG ;PSI/DP  -.118 (0) (5.49)[ -.0348;.558 ][ .314;4.16 ]<-3.47>

  YD/VG ;PHI/DA   .0819 (0) (2.64)[ .126;.342 ][ .666;.658 ]<.0110>
  YD/VG ;THE/DB  -.0649 (0) (.0215) (.869) (1.49)[ .419;4.07 ]<-.0300>
  YD/VG ;PSI/DP  -.125 (.609) (2.13)[ -.129;.437 ][ .232;5.98 ]<-1.10>

  XD/WG ;PHI/DA  -.00381 (0) (0)[ .506;4.50 ][ -.182;5.60 ]<-2.43>
  XD/WG ;THE/DB  -.000597 (0) (0) (.112) (.722)[ -.255;8.98 ]<-.00388>
  XD/WG ;PSI/DP   .0116 (0) (.407) (-.466) (7.88)[ .217;5.15 ]<-.860>

  ZD/WG ;PHI/DA   .896 (0) (2.42)[ -.0435;.359 ][ .301;2.68 ]<2.00>
  ZD/WG ;THE/DB  -.537 (0) (.0216) (.0623) (5.68)[ .229;2.71 ]<-.0300>
  ZD/WG ;PSI/DP  -1.91 (2.56) (5.42)[ -.209;.423 ][ .155;.481 ]<-1.10>

  YD/UG ; ZD/DC  -.257 (0) (.0580) (5.66)[ .217;2.42 ][ .287; 1.59 ]<-6.17>
  YD/VG ; ZD/DC  -.696 (0) (.0735) (2.88)[ .210;1.53 ][ .453;4.29 ]<-6.17>

 PHI/UG ;THE/DB ;PSI/DP  -.00112 (0) (.105)<-.000118>
 THE/UG ;PHI/DA ;PSI/DP   .0345 (0) (.0206) (.734)<.000522>
 PSI/UG ;PHI/DA ;THE/DB  -.00521 (0) (.0170) (.660)<-.000127>

 PHI/VG ;THE/DB ;PSI/DP   .113 (0) (.0208) (.689)<.001161>
 THE/VG ;PHI/DA ;PSI/DP  -.0501 (0) (.0133) (.704)<-.001171>
 PSI/VG ;PHI/DA ;THE/DB   .0650 (0) (.0218) (.746)<.001106>

 PHI/WG ;THE/DB ;PSI/DP   .0488 (0) (.0210) (-.0695)<-.711E-4>
 THE/WG ;PHI/DA ;PSI/DP  -.0119 (0) (.0325) (-.157)<.604E-4>
 PSI/WG ;PHI/DA ;THE/DB  -.0215 (0) (.0217) (.182)<-.664E-4>
```

TABLE II-5 CONTINUED
OH-6A TRANSFER FUNCTION FACTORS

CASE 8 60KT

GUST NUMERATORS CONCLUDED:

PHI/PG ;THE/DB ;PSI/DP 10.7 (.0162) (.0242) (.726)<.00306>
THE/PG ;PHI/DA ;PSI/DP 1.21 (-.00112) (.0237) (.725)<-.648E-4>
PSI/PG ;PHI/DA ;THE/DB -.223 (.0256) (-.0267) (.730)<.000111>

PHI/QG ;THE/DB ;PSI/DP 3.81 (.631)[.988;.0199]<.000953>
THE/QG ;PHI/DA ;PSI/DP -8.07 (.0165) (.0264) (.714)<-.00251>
PSI/QG ;PHI/DA ;THE/DB .271 (1.16)[.909;.0255]<.000205>

PHI/RG ;THE/DB ;PSI/DP -.0918 (.0227)[-.377;.372]<-.000286>
THE/RG ;PHI/DA ;PSI/DP .954 (.694)[.988;.0294]<.000573>
PSI/RG ;PHI/DA ;THE/DB -1.30 (.0209) (.0278) (.754)<-.000570>

XD/UG ;PHI/DA ;THE/DB -.0195 (0) (.737)[.273;2.74]<-.108>
XD/UG ;PHI/DA ;PSI/DP -.106 (.0208) (.711)[.282;3.28]<-.0168>
XD/UG ;THE/DB ;PSI/DP .0408 (.714) (5.48)[-.0160;.570]<.0519>

ZD/UG ;PHI/DA ;THE/DB -.0175 (0) (0)[.339;3.05]<-.163>
ZD/UG ;PHI/DA ;PSI/DP -.147 (0) (.0208)[.308;4.16]<-.0529>
ZD/UG ;THE/DB ;PSI/DP .0371 (0) (5.48)[-.0307;.576]<.0675>

YD/VG ;PHI/DA ;THE/DB -.0618 (0) (.0213)[.939;.657]<-.000570>
YD/VG ;PHI/DA ;PSI/DP -.0695 (.284) (3.36)[-.573;.503]<-.0168>
YD/VG ;THE/DB ;PSI/DP .102 (.0208) (.693)[.210;5.95]<.0519>

XD/WG ;PHI/DA ;THE/DB -.000609 (0) (0)[.551;8.11]<-.0401>
XD/WG ;PHI/DA ;PSI/DP .0119 (0) (-.143)[.0761;5.70]<-.0556>
XD/WG ;THE/DB ;PSI/DP -.0248 (0)[.142;1.05]<-.0272>

ZD/WG ;PHI/DA ;THE/DB -.678 (0) (.0218)[.280;2.70]<-.108>
ZD/WG ;PHI/DA ;PSI/DP -2.38 (.0208) (2.48)[-.0855;.370]<-.0168>
ZD/WG ;THE/DB ;PSI/DP 1.43 (.0208) (5.47)[-.0253;.564]<.0519>

XD/UG ; ZD/DC ;PHI/DA -.324 (0)[.261;2.45][.289;3.57]<-24.7>
XD/UG ; ZD/DC ;THE/DB .119 (0) (.0580) (5.66)[.215;2.67]<.277>
XD/UG ; ZD/DC ;PSI/DP .682 (5.49)[-.0343;.557][.289;3.41]<13.5>

YD/VG ; ZD/DC ;PHI/DA -.665 (0) (.0704) (1.29)[.554;1.40]<-.118>
YD/VG ; ZD/DC ;THE/DB .479 (0) (.0226) (1.38)[.415;4.31]<.277>
YD/VG ; ZD/DC ;PSI/DP 1.04 (.242)[.683;1.21][.234;6.04]<13.5>

XD/UG ;PHI/DA ;THE/DB ;PSI/DP .0514 (.0177) (.725)<.000661>
ZD/UG ;PHI/DA ;THE/DB ;PSI/DP .0467 (0) (.0138)<.000642>
YD/VG ;PHI/DA ;THE/DB ;PSI/DP .0575 (.0194) (.593)<.000661>

XD/WG ;PHI/DA ;THE/DB ;PSI/DP .000522 (0) (-3.37)<-.00176>
ZD/WG ;PHI/DA ;THE/DB ;PSI/DP 1.80 (.0149) (.0247)<.000661>
XD/UG ; ZD/DC ;PHI/DA ;THE/DB .151 (0)[.263;2.67]<1.09>

YD/VG ; ZD/DC ;PHI/DA ;THE/DB .449 (0) (.0223) (.514)<.00515>
YD/VG ; ZD/DC ;PHI/DA ;PSI/DP .572 (2.51)[-.0781;.376]<.203>
XD/WG ; ZD/DC ;PHI/DA ;THE/DB .123 (0)[.336;3.73]<1.72>

XD/UG ; ZD/DC ;PHI/DA ;THE/DB ;PSI/DP -.398 (.0209)<-.00813>
YD/VG ; ZD/DC ;PHI/DA ;THE/DB ;PSI/DP -.438 (.0190)<-.00813>
XD/WG ; ZD/DC ;PHI/DA ;THE/DB ;PSI/DP -.302 (-.0262)<.00792>

MICROFILMED FROM
BEST AVAILABLE COPY

TABLE II-5 CONTINUED
OH-6A TRANSFER FUNCTION FACTORS

CASE 9 80KT

DENOMINATOR: (0) (.0611) (5.70)[.0591;.268][.981;1.79][.241;3.23]<.831>

CONTROL NUMERATORS:

PHI/DA 1.26 (0) (1.43) (2.05)[.0627;.287][.248;3.22]<3.19>
THE/DB -.750 (0) (.0286) (.0600) (.789) (5.67)[.233;3.28]<-.0620>
PSI/DP -3.00 (.703) (2.47) (5.47)[-.463;.378][.508;.583]<-1.39>

PHI/DB .199 (0) (-.0960) (.122)[.183;3.07][.778;5.72]<-.719>
THE/DA .485 (0) (-.0352) (.0369) (.824)[.520;2.74]<-.00388>

PHI/DA ;THE/DB -.956 (0) (.0289) (.798)[.284;3.31]<-.241>
PHI/DA ;PSI/DP -3.79 (.0291) (.925) (2.53)[-.0701;.332]<-.0283>
THE/DB ;PSI/DP 2.25 (.0275) (.749) (5.46)[-.0302;.592]<.0889>

PHI/DB ;PSI/DP -.591 (.0712)[-.374;.0895][.900;4.56]<-.00699>
PHI/DP ;THE/DB 18.7 (0) (.0275) (.724)<.178>
PHI/DC ;THE/DB -.184 (0) (.0277) (1.35)[.231;5.16]<-.183>

THE/DA ;PSI/DP -.136 (.0398) (.753) (-1.18) (1.47) (9.77)<.0698>
THE/DP ;PHI/DA -1.59 (0) (.0398) (.760) (6.13)<-.294>
THE/DC ;PHI/DA .512 (0) (.0345) (.890)[.110;3.72]<.218>

PSI/DA ;THE/DB -.130 (.0289) (.802) (2.39)[-.662;2.82]<-.0571>
PSI/DB ;PHI/DA .172 (.0478) (-.192) (.304)[-.159;3.92]<-.00733>
XD/DB ;PHI/DA .910 (0) (.826)[.278;3.34][.0787;5.66]<268.>

YD/DA ;THE/DB -.196 (.0289) (.797)[.246;3.24][.0646;8.98]<-7.71>
ZD/DB ;PHI/DA 3.36 (0) (.0369)[.271;3.38][.277;5.41]<41.5>
XD/DC ;PHI/DA -15.5 (0) (.929)[.295;3.75]<-203.>

YD/DP ;THE/DB -1.34 (.0275) (.728) (-4.52) (7.61)[.328;3.60]<12.0>
ZD/DC ;PHI/DA -11.3 (0) (.0759)[.628;2.88][.148;2.99]<-63.6>

PHI/DA ;THE/DB ;PSI/DP 2.87 (.0200) (.0329) (.775)<.00146>
PHI/DC ;THE/DB ;PSI/DP .541 (-.0167) (.0277) (1.77)<-.000442>
THE/DC ;PHI/DA ;PSI/DP -1.53 (.00222) (.0375) (.824)<-.000105>

PSI/DC ;PHI/DA ;THE/DB -.444 (.0274) (.0753) (1.09)<-.00100>
XD/DB ;PHI/DA ;PSI/DP -2.71 (.0258) (.818)[.0727;5.66]<-1.83>
YD/DA ;THE/DB ;PSI/DP 1.42 (.0274) (.769)[.0149;8.07]<1.93>

ZD/DC ;PHI/DA ;THE/DB 7.18 (0) (.0275)[.272;3.16]<1.97>
ZD/DC ;PHI/DA ;PSI/DP 33.8 (.0281) (.0823)[.595;3.17]<.370>
XD/DC ;PHI/DA ;THE/DB -.321 (0) (.661)[.275;3.78]<-3.03>

XD/DC ;PHI/DA ;PSI/DP 47.1 (.00788) (.856)<.318>
YD/DP ;PHI/DA ;THE/DB -1.72 (.0256) (.638) (-2.56) (2.75)<.198>
ZD/DB ;PHI/DA ;PSI/DP -10.1 (.0279) (.0357)[.254;5.44]<-.296>

ZD/DC ;PHI/DA ;THE/DB ;PSI/DP -21.5 (.0265) (.0115)<-.0180>
XD/DC ;PHI/DA ;THE/DB ;PSI/DP .916 (-.0218) (.481)<-.00963>

TABLE II-5 CONTINUED
OH-6A TRANSFER FUNCTION FACTORS

CASE 10 100KT

DENOMINATOR: (0) (.0551) (1.00) (2.41) (5.65)[-.0196;.297][.244;3.93]<1.03>

CONTROL NUMERATORS:

PHI/DA 1.26 (0) (.905) (2.47)[-.0199;.317][.298;4.01]<8.58>
THE/DB -.770 (0) (.0148) (.0535) (.791) (5.65)[.237;3.89]<-.0972>
PSI/DP -3.08 (.989) (2.66) (5.42)[-.580;.369][.502;.751]<-1.66>

PHI/DB .187 (0) (-.101) (.140)[.277;3.09][.663;7.00]<-1.25>
THE/DA .0451 (0) (.0379) (-.0518) (.813) (6.27)[.778;3.92]<-.00697>

PHI/DA ;THE/DB -.983 (0) (.0351) (.802)[.260;4.00]<-.882>
PHI/DA ;PSI/DP -3.90 (.0367) (.943) (2.67)[-.116;.320]<-.0368>
THE/DB ;PSI/DP 2.36 (.0334) (.760) (5.41)[-.0705;.638]<.132>

PHI/DB ;PSI/DP -.577 (.0894)[-.529;.0663][.810;5.50]<-.00688>
PHI/DP ;THE/DB 28.5 (0) (.0134) (.728)<.693>
PHI/DC ;THE/DB -.190 (0) (.0336) (1.09)[.218;7.08]<-.347>

THE/DA ;PSI/DP -.148 (.0455) (.798) (-1.29) (2.34) (6.52)<.104>
THE/DP ;PHI/DA -2.25 (0) (.0455) (.793) (6.77)<-.549>
THE/DC ;PHI/DA .650 (0) (.0400) (.814)[.297;4.63]<.458>

PSI/DA ;THE/DB -.151 (.0351) (.801) (2.92)[-.694;2.60]<-.0837>
PSI/DB ;PHI/DA .215 (.0807) (-.485) (-.543) (1.09) (-2.36)<-.00886>
YD/DB ;PHI/DA .774 (0) (.965)[.232;3.97][.0890;5.85]<404.>

YD/DA ;THE/DB -.800 (.0351) (.801)[.213;3.41][.0798;9.30]<-14.1>
ZD/DP ;PHI/DA 8.26 (0) (.0509)[.206;3.88][.310;5.75]<108.>
XD/DC ;PHI/DA 2.30 (0) (.955) (-8.13)[.268;4.51]<-363.>

YD/DP ;THE/DB -1.42 (.0334) (.732) (-5.27) (8.09)[.318;3.68]<22.3>
ZD/DC ;PHI/DA -12.0 (0) (.0749)[.125;3.46][.547;3.63]<-141.>

PHI/DA ;THE/DB ;PSI/DP 1.02 (.0254) (.0402) (.807)<.002049>
PHI/DC ;THE/DB ;PSI/DP .593 (-.0111) (.0336) (1.98)<-.000416>
THE/DC ;PHI/DA ;PSI/DP -2.04 (.00919) (.0435) (.836)<-.000680>

PSI/DC ;PHI/DA ;THE/DB -.665 (.0331) (.0892) (.768)<-.000151>
XD/DB ;PHI/DA ;PSI/DP -2.36 (.0127) (.966)[.0675;5.83]<-2.89>
YD/DA ;THE/DB ;PSI/DP 1.51 (.0335) (.797)[.0234;8.06]<2.61>

ZD/DC ;PHI/DA ;THE/DB 7.12 (0) (.0308)[.237;3.65]<2.91>
ZD/DC ;PHI/DA ;PSI/DP 36.9 (.0308) (.0742)[.501;2.72]<.621>
XD/DC ;PHI/DA ;THE/DB -.534 (0) (.486)[.247;8.41]<-5.09>

XD/DC ;PHI/DA ;PSI/DP -6.72 (.0150) (.959) (-8.36)<.811>
YD/DP ;PHI/DA ;THE/DB -1.80 (.0318) (.647) (-1.26) (1.47)<.920>
ZD/DB ;PHI/DA ;PSI/DP -11.1 (.0435) (.0504)[.259;5.55]<-.682>

ZD/DC ;PHI/DA ;THE/DB ;PSI/DP -21.7 [.941;.0368]<-.0294>
XD/DC ;PHI/DA ;THE/DB ;PSI/DP 1.58 (-.0149) (.372)<-.00871>

TABLE II-5 CONTINUED
OH-6A TRANSFER FUNCTION FACTORS

CASE 11 120KT

DENOMINATOR: (0) (.0616) (.489) (3.20) (5.47)[-.327;.405][.262;4.62]<1.88>

CONTROL NUMERATORS:

PHI/DA 1.27 (0) (.456) (3.23)[-.373;.428][.308;4.82]<7.99>
THE/DB -.795 (0) (.0424) (.0604) (.742) (5.48)[.229;4.87]<-.165>
PSI/DP -3.32 (.360) (3.11) (5.32)[-.737;.376][.300;.948]<-2.51>

PHI/DB .182 (0) (-.0955) (.153)[.524;3.11][.585;7.70]<-1.53>
THE/DA .0501 (0) (-.0216) (.0480) (.716) (4.96)[.707;5.65]<-.00540>

PHI/DA ;THE/DB -1.02 (0) (.0425) (.747)[.279;4.71]<-.719>
PHI/DA ;PSI/DP -4.25 (.0439) (.750) (3.11)[-.235;.373]<-.0605>
THE/DB ;PSI/DP 2.64 (.0406) (.728) (5.32)[-.149;.684]<.134>

PHI/DB ;PSI/DP -.621 (.0977)[-.502;.0476][.726;6.44]<-.00569>
PHI/DP ;THE/DB 83.5 (0) (.0406) (.698)<1.23>
PHI/DC ;THE/DB -17.1 (0) (.0410) (.852)<-.605>

THE/DA ;PSI/DP -.165 (.0575) (.809) (-1.11) (3.16) (6.11)<.164>
THE/DP ;PHI/DA -2.50 (0) (.0575) (.806) (9.02)<-1.04>
THE/DC ;PHI/DA .842 (0) (.0496) (.707)[.323;5.46]<.862>

PSI/DA ;THE/DB -.148 (.0425) (.744) (4.00)[-.830;2.46]<-.111>
PSI/DB ;PHI/DA .117 (.0721) (4.84) (-8.88)[-.332;.155]<-.00872>
XD/DP ;PHI/DA .548 (0) (1.17)[.256;4.58][.0794;6.33]<538.>

YD/DA ;THE/DB -.831 (.0425) (.746)[.225;4.35][.109;9.43]<-23.0>
ZD/DB ;PHI/DA 5.24 (0) (.0675)[.217;4.25][.315;5.97]<228.>
XD/DC ;PHI/DA .474 (0) (.982) (-5.62) (8.04)[.271;5.16]<-560.>

YD/DP ;THE/DB -1.56 (.0406) (.696) (-6.13) (8.49)[.306;4.13]<39.3>
ZD/DC ;PHI/DA -12.2 (0) (.0881)[.126;4.04][.515;4.19]<-308.>

PHI/DA ;THE/DB ;PSI/DP 3.41 (.0127) (.0484) (.799)<.00431>
PHI/DC ;THE/DB ;PSI/DP .682 (-.00523) (.0411) (1.65)<-.000272>
THE/DC ;PHI/DA ;PSI/DP -2.80 (.0156) (.0534) (.790)<-.00185>

PSI/DC ;PHI/DA ;THE/DB -.980 (.0405) (.0966) (.597)<-.00229>
XD/DB ;PHI/DA ;PSI/DP -1.81 (.0401) (1.19)[.0655;6.31]<-3.41>
YD/DA ;THE/DB ;PSI/DP 1.72 (.0411) (.786)[.0463;8.06]<3.60>

ZD/DC ;PHI/DA ;THE/DB 6.31 (0) (.0315)[.230;3.98]<3.15>
ZD/DC ;PHI/DA ;PSI/DP 80.7 (.0386) (.0885)[.442;3.22]<1.29>
XD/DC ;PHI/DA ;THE/DB -.744 (0) (.406)[.249;5.01]<-7.57>

XD/DC ;PHI/DA ;PSI/DP -1.34 (.0235) (1.04) (-5.50) (8.77)<1.63>
YD/DP ;PHI/DA ;THE/DB -1.94 (.0195) (.649) (-4.13) (4.24)<.873>
ZD/DB ;PHI/DA ;PSI/DP -17.5 (.0407) (.0673)[.265;5.54]<-1.47>

ZD/DC ;PHI/DA ;THE/DB ;PSI/DP -21.1 [.956;.0471]<-.0479>
XD/DC ;PHI/DA ;THE/DB ;PSI/DP 2.27 (-.0159) (.306)<-.0110>

TABLE II-5 CONTINUED
OH-6A TRANSFER FUNCTION FACTORS

CASE 12 130KT

DENOMINATOR: (0) (.0652) (.383) (3.55) (5.34)[-.595;.451][.264;5.01]<2.00>

CONTROL NUMERATORS:

PHI/DA 1.26 (0) (.173) (3.55)[-.628;.471][.310;5.28]<10.4>
THE/DB -.821 (0) (.0442) (.0634) (.708) (5.36)[.238;8.83]<-.204>
PSI/DP -1.27 (.347) (3.31) (5.23)[-.800;.381][.189;1.03]<-1.00>

PHI/DB .176 (0) (-.123) (.189)[.763;2.97][.569;7.77]<-2.19>
THE/DA .0520 (0) (-.0389) (.0432) (.650) (3.81)[.668;6.80]<-.0100>

PHI/DA ;THE/DB -1.06 (0) (.0441) (.712)[.289;5.14]<-.882>
PHI/DA ;PSI/DP -8.22 (.0479) (.698) (3.27)[-.308;.404]<-.0753>
THE/DB ;PSI/DP 2.69 (.0418) (.712) (5.24)[-.206;.715]<.215>

PHI/DB ;PSI/DP -.579 (.102)[-.414;.0899][.697;7.24]<-.00625>
PHI/DP ;THE/DB 51.5 (0) (.0418) (.681)<1.47>
PHI/DC ;THE/DB -23.3 (0) (.0425) (.759)<-.751>

THE/DA ;PSI/DP -.173 (.0625) (.816) (-1.03)[.957;8.89]<.183>
THE/DP ;PHI/DA -2.77 (0) (.0424) (.813) (8.94)<-1.26>
THE/DC ;PHI/DA .931 (0) (.0503) (.662)[.315;5.99]<1.11>

PSI/DA ;THE/DB -.187 (.0441) (.707) (4.41)[-.995;2.52]<-.129>
PSI/DB ;PHI/DA -9.76 (.0745)[-.136;.124]<-.0112>
XD/DP ;PHI/DA .819 (0) (1.41)[.279;4.94][.0690;6.56]<629.>

YD/DA ;THE/DB -.857 (.0441) (.712)[.222;8.65][.182;9.52]<-28.1>
ZD/DB ;PHI/DA 5.59 (0) (.0725)[.229;4.46][.339;6.20]<311.>
XD/DC ;PHI/DA .663 (0) (1.07) (-8.86) (8.57)[.267;5.51]<-691.>

YD/DP ;THE/DB -1.60 (.0418) (.682) (-6.57) (8.69)[.299;4.25]<47.1>
ZD/DC ;PHI/DA -12.4 (0) (.0916)[.115;8.35][.509;8.47]<-829.>

PHI/DA ;THE/DB ;PSI/DP 1.50 (.0347) (.0518) (.796)<.00502>
PHI/DC ;THE/DP ;PSI/DP .608 (-.00765) (.0426) (2.02)<-.000403>
THE/DC ;PHI/DA ;PSI/DP -3.08 (.0169) (.0570) (.780)<-.00212>

PSI/DC ;PHI/DA ;THE/DB -1.22 (.0421) (.102) (.533)<-.00281>
XD/DB ;PHI/DA ;PSI/DP -1.19 (.0442) (1.46)[.0655;6.58]<-3.85>
YD/DA ;THE/DB ;PSI/DP 1.78 (.0424) (.782)[.0629;8.06]<3.93>

ZD/DC ;PHI/DA ;THE/DB 6.21 (0) (.0299)[.228;4.12]<3.15>
ZD/DC ;PHI/DA ;PSI/DP 80.8 (.0177) (.0919)[.417;3.47]<1.71>
XD/DC ;PHI/DA ;THE/DB -.857 (0) (.155)[.247;5.32]<-8.59>

XD/DC ;PHI/DA ;PSI/DP -1.80 (.0277) (1.23) (-8.72) (7.11)<2.06>
YD/DP ;PHI/DA ;THE/DB -1.96 (.0408) (.661) (-8.52) (8.60)<1.10>
ZD/DP ;PHI/DA ;PSI/DP -18.4 (.0447) (.0725)[.265;5.66]<-1.91>

ZD/DC ;PHI/DA ;THE/DB ;PSI/DP -20.4 [.988;.0518]<-.0547>
XD/DC ;PHI/DA ;THE/DB ;PSI/DP 2.51 (-.0291) (.256)<-.0188>

MICROFILMED FROM
BEST AVAILABLE COPY

TABLE II-5 CONTINUED
OH-6A TRANSFER FUNCTION FACTORS

CASE 19 HOVER LIGHT WEIGHT

DENOMINATOR: (0) (.257) (.821) (1.92) (5.04)[.0236;.376]∠ -.0256;.470]<.0635>

CONTROL NUMERATORS:

PHI/DA 1.31 (0) (.0234) (.263) (.810) (1.80)[.00621;.359]<.00151>
THE/DB -.715 (0) (.0171) (.285) (.877) (5.06)[-.0249;.516]<-.00412>
PSI/DP -2.71 (.413) (1.91) (4.92)[-.197;.448]∠ .0690;.487]<-.470>

PHI/DB .187 (0) (.0260) (.368) (.939) (5.97)[-.181;.262]<.000657>
THE/DA .629 (0) (.0359) (-.296) (.935)[.914;.258]<-.0004?2>

PHI/DA ;THE/DB -.945 (0) (.0166) (.0235) (.290) (.876)<-.9398-4>
PHI/DA ;PSI/DP -3.50 (.0235) (.413) (1.79)[-.126;.437]<-.0116>
THE/DB ;PSI/DP 1.95 (.0126) (.381) (4.95)[-.0206;.517]<.0126>

PHI/DB ;PSI/DP -.493 (.0328) (.416) (6.15)[-.0799;.281]<-.00325>
PHI/DP ;THE/DB .171 (0) (.0209) (.566)[.0415;.0869]<.1538-4>
PHI/DC ;THE/DB -.111 (0) (.0171) (-.0892)[.924;.509]<.4378-4>

THE/DA ;PSI/DP -1.67 (.0547) (.120) (-.351) (.599)<.00211>
THE/DP ;PHI/DA -.181 (0) (.314) (2.85)[.000;.0226]<-.8268-4>
THE/DC ;PHI/DA -.0558 (0) (.00867) (.0282) (.233) (-2.09)<.6598-5>

PSI/DA ;THE/DB -.155 (.966)[.394;.0725]∠ -.886;1.27]<-.00128>
PSI/DB ;PHI/DA .0836 (.0234) (.985) (-1.84)[.614;2.15]<-.00809>
XD/DB ;PHI/DA 1.13 (0) (.0234) (.291) (.877)[.0657;5.19]<.181>

YD/DA ;THE/DB -.366 (0) (.0167) (.290) (.874)[.108;9.08]<-.128>
ZD/DB ;PHI/DA -.00457 (0) (.0232) (1.27) (4.72)[-.825;9.91]<-.0629>
XD/DC ;PHI/TA 1.41 (0) (.0178) (.233) (-2.64)<-.0155>

YD/DP ;THE/DB -1.27 (0) (-.00351) (.413) (5.90)[-.991;.487]<.00181>
ZD/DC ;PHI/DA -11.0 (0) (.0114) (.463) (1.81)[.108;.336]<-.03?5>

PHI/TA ;THE/DB ;PSI/DP 2.54 (.0119) (.0237) (.387)<.000277>
PHI/DC ;THE/DB ;PSI/DP .147 (.0126) (-.0953) (.761)<-.0001?4>
THE/DC ;PHI/DA ;PSI/DP .308 (-.00497) (.0316) (-.192)<.9288-5>

PSI/DC ;PHI/DA ;THE/DB -.830 (.0855)[.711;.0214]<-.1268-4>
XD/DB ;PHI/DA ;PSI/DP -3.02 (.0234) (.396)[.0647;5.20]<-.736>
YD/DA ;THE/DB ;PSI/DP 1.27 (.0122) (.383)[.0588;8.01]<.383>

ZD/DC ;PHI/DA ;THE/DB 7.93 (0) (.0151) (.0303) (.[illegible]31)<.00229>
ZD/DC ;PHI/DA ;PSI/DP 29.5 (.0284) (1.00)[-.106;.981]<.297>
XD/DC ;PHI/DA ;THE/DB .0427 (0) (-.0212) (.245) (-.710)<.0001?2>

XD/DC ;PHI/DA ;PSI/DP -9.75 (.0149) (-.210)<.0305>
YD/DP ;PHI/DA ;THE/DB -1.77 (0) (.0179) (.0490) (.279)<-.000432>
ZD/DB ;PHI/DA ;PSI/DP .0231 (.0222) (9.79)[-.160;5.01]<.127>

ZD/DC ;PHI/DA ;THE/DB ;PSI/DP -21.4 (.0111) (.0289)<-.00760>
XD/DC ;PHI/DA ;THE/DB ;PSI/DP -.291 [.0960;.0674]<-.001?2>

TABLE II-5 CONTINUED
OH-6A TRANSFER FUNCTION FACTORS

CASE 25 60KT MAX CLIMB

DENOMINATOR: (0) (.0750) (5.34)[-.0769;.341][.997;1.46][.231;2.70]<.728>

CONTROL NUMERATORS:

PHI/DA 1.29 (0) (1.27) (1.61)[-.0974;.361][.301;2.76]<2.63>
THE/DB -.745 (0) (.0194) (.0746) (.707) (5.34)[.212;2.68]<-.0292>
PSI/DP -2.63 (5.19)[-.298;.429][.0588;.523][.998;1.45]<-1.44>

PHI/DB .184 (0) (-.193) (.213) (2.46) (5.19)[.403;2.65]<-.647>
THE/DA .587 (0) (.744)[.952;.0544][.428;2.38]<.00729>

PHI/DA ;THE/DB -.974 (0) (.0187) (.712)[.298;2.76]<-.0998>
PHI/DA ;PSI/DP -3.38 (.0230) (1.38) (1.56)[-.122;.380]<-.0241>
THE/DB ;PSI/DP 1.96 (.0173) (.704) (5.20)[-.200;.415]<.0469>

PHI/DB ;PSI/DP -.474 (.0503) (2.25) (6.16)[-.189;.216]<-.0154>
PHI/DP ;THE/DB 12.1 (0) (.0173) (.697)<.146>
PHI/DC ;THE/DB -.169 (0) (.0182) (.825)[.224;5.55]<-.0778>

THE/DA ;PSI/DP -1.41 (.0396) (.621) (-.676) (1.24)<.0291>
THE/DP ;PHI/DA -.825 (0) (.0396) (.657) (4.22)<-.0906>
THE/DC ;PHI/DA .365 (0) (.0217) (.852)[.408;3.18]<.0683>

PSI/DA ;THE/DB -.150 (.0187) (.710) (3.23)[-.936;2.23]<-.0318>
PSI/DB ;PHI/DA .106 (.0385) (1.94) (-2.23)[-.102;.847]<-.0126>
XD/DB ;PHI/DA 1.06 (0) (.766)[.287;2.76][.104;5.27]<172.>

YD/DA ;THE/DB -.398 (.0187) (.711)[.259;2.67][.0936;9.16]<-3.17>
ZD/DB ;PHI/DA 2.32 (0) (.0123)[.278;2.75][.223;5.48]<6.50>
XD/DC ;PHI/DA -10.6 (0) (.900)[.394;3.26]<-102.>

YD/DP ;THE/DB -1.16 (.0173) (.699) (-4.19) (7.11)[.309;3.35]<4.67>
ZD/DC ;PHI/DA -10.8 (0) (.106)[.669;2.00][.162;2.56]<-30.1>

PHI/DA ;THE/DB ;PSI/DP 2.55 (.00992) (.0261) (.721)<.000476>
PHI/DC ;THE/DB ;PSI/DP .370 (.0188) (-.0456) (1.64)<-.000523>
THE/DC ;PHI/DA ;PSI/DP -.891 (-.00884) (.0306) (.957)<.000230>

PSI/DC ;PHI/DA ;THE/DB -.855 (.0177) (.0647) (.621)<-.000610>
XD/DB ;PHI/DA ;PSI/DP -2.75 (.0205) (.771)[.100;5.29]<-1.22>
YD/DA ;THE/DB ;PSI/DP 1.28 (.0155) (.715)[.0474;8.05]<.921>

ZD/DC ;PHI/DA ;THE/DB 7.44 (0) (.0189)[.254;2.62]<.964>
ZD/DC ;PHI/DA ;PSI/DP 28.2 (.0276) (.158)[.641;1.56]<.296>
XD/DC ;PHI/DA ;THE/DB -.235 (0) (.241)[.339;3.36]<-.640>

XD/DC ;PHI/DA ;PSI/DP .343 (.00795) (.991)[.0780;8.97]<.217>
YD/DP ;PHI/DA ;THE/DB -1.56 (.0126) (.611) (-1.92) (2.05)<.0474>
ZD/DB ;PHI/DA ;PSI/DP -6.06 [.923;.0196][.208;5.47]<-.0696>

ZD/DC ;PHI/DA ;THE/DB ;PSI/DP -19.6 (.0113) (.0292)<-.000649>
XD/DC ;PHI/DA ;THE/DB ;PSI/DP .468 (.106) (-.319)<-.0150>

TABLE II-5 CONCLUDED
OH-6A TRANSFER FUNCTION FACTORS

CASE 26 60 KT AUTOROTATION

DENOMINATOR: (0) (.0545) (6.16)[.127; .187][.872; 2.21][.193; 2.39]<.331>

CONTROL NUMERATORS:

PHI/DA 1.23 (0)[.162; .195][.901; 2.11][.203; 2.36]<1.17>
THE/DB -.737 (0) (.0192) (.0544) (.775) (6.10)[.256; 2.54]<-.0236>
PSI/DP -2.60 (1.52) (1.88) (5.95)[.577; .330][-.267; .333]<-.534>

PHI/DB .215 (0) (.0579) (-.0630)[.0347; 2.52][.817; 4.88]<-.118>
THE/DA .550 (0) (.0246) (-.0978) (.773)[.257; 2.06]<-.00436>

PHI/DA ;THE/DB -.919 (0) (.0194) (.775)[.272; 2.48]<-.0848>
PHI/DA ;PSI/DP -3.20 (.0160) (1.31) (2.02)[.0994; .215]<-.00626>
THE/DB ;PSI/DP 1.91 (.0191) (.735) (5.93)[.187; .476]<.0360>

PHI/DB ;PSI/DP -.543 (.0390) (.114) (-.210) (1.20) (3.89)<.00633>
PHI/DP ;THE/DB 8.00 (0) (.0191) (.717)<.109>
PHI/DC ;THE/DB -.171 (0) (.0189) (2.35)[.0960; 2.78]<-.0587>

THE/DA ;PSI/DP -1.33 (.0249) (.669) (.801) (-1.61)<.0285>
THE/DP ;PHI/DA -1.00 (0) (.0249) (.716) (4.88)<-.0871>
THE/DC ;PHI/DA .407 (0) (.0237) (1.20)[.218; 2.60]<.0780>

PSI/DA ;THE/DB -.148 (.0194) (.773) (1.15)[-.127; 3.30]<-.0277>
PSI/DB ;PHI/DA .251 (.0428)[.237; .137][-.0622; 4.50]<.00409>
XD/DB ;PHI/DA .941 (0) (.734)[.275; 2.52][.0133; 5.61]<138.>

YD/DA ;THE/DB -.356 (.0194) (.775)[.254; 2.51][-.0178; 8.99]<-2.71>
ZD/DB ;PHI/DA 2.16 (0) (.00307)[.285; 2.57][.277; 5.44]<1.30>
XD/DC ;PHI/DA -.177 (0) (1.19)[.215; 2.61][-.198; 8.52]<-104.>

YD/DP ;THE/DB -1.15 (.0191) (.720) (-3.28) (7.47)[.365; 3.32]<3.51>
ZD/DC ;PHI/DA -10.0 (0) (.0411)[.142; 2.34][.709; 2.43]<-13.2>

PHI/DA ;THE/DB ;PSI/DP 2.34 (.719)[.977; .0208]<.000759>
PHI/DC ;THE/DB ;PSI/DP .439 (-.0158) (.0195) (1.52)<-.000285>
THE/DC ;PHI/DA ;PSI/DP -1.05 (.00496) (.0243) (.920)<-.000117>

PSI/DC ;PHI/DA ;THE/DB -.0491 (.0204) (.0601) (9.22)<-.000567>
XD/DB ;PHI/DA ;PSI/DP -2.43 (.0204) (.724)[.0102; 5.61]<-1.13>
YD/DA ;THE/DB ;PSI/DP 1.15 (.0203) (.738)[-.0297; 8.06]<1.12>

ZD/DC ;PHI/DA ;THE/DB 6.75 (0) (.0215)[.280; 2.96]<.875>
ZD/DC ;PHI/DA ;PSI/DP 25.9 [.958; .0275][.693; 1.91]<.0713>
XD/DC ;PHI/DA ;THE/DB -.178 (0) (1.39)[.195; 2.64]<-1.72>

XD/DC ;PHI/DA ;PSI/DP .458 (.00569) (.917)[-.198; 8.51]<.174>
YD/DP ;PHI/DA ;THE/DB -1.45 (.0213) (.667) (-1.80) (2.00)<.0742>
ZD/DB ;PHI/DA ;PSI/DP -5.61 (.00188) (.0210)[.264; 5.48]<-.00646>

ZD/DC ;PHI/DA ;THE/DB ;PSI/DP -17.4 (.0190) (.0254)<-.00452>
XD/DC ;PHI/DA ;THE/DB ;PSI/DP .461 (0) (.993)<.458>

BLANK PAGE

SECTION III

BOEING VERTOL BO-105C

The BO-105C is a twin turbine light weight utility helicopter designed by Messerschmitt-Bölkow-Blohm and marketed in the US by Boeing-Vertol. It has a maximum gross weight of 2300 kg (5070 lb) and seats a pilot and five passengers. The BO-105C is powered by two Allison 250-C18 or -C20 turboshaft engines. The main rotor system is a four-bladed, soft-in-plane, hingeless design.

The control system is hydraulically actuated. Cyclic controls involve a breakout and linear force gradient, the pedals have zero breakout and force gradient, and the collective stick has zero breakout and an adjustable force gradient.

The derivative data presented here are transcribed directly from Ref. 4. They were generated by the Boeing-Vertol Y-92 trim and stability analysis computer program. The flexible blade attachment to the hub was modeled as an equivalent flapping hinge. Model parameters were matched on the basis of the natural frequencies of a flexibly attached blade.

The stability derivative data, as taken directly from Ref. 4, do not contain the effects of a cross product of inertia, and thereby differ from the other vehicles included in this report. A non-zero I_{xz} is indicated in Ref. 9 and could be used to modify the lateral-directional derivative data presented here. The potential impact of such a modification is discussed in Volume Two (Ref. 1).

Several vehicle reference frames appear in the background documents (Refs. 4 and 9) with each differing in its datum location. The convention adopted here is based on a fuselage nose datum — that used in Ref. 9. Other reference frames include the MBB rotor reference axis which is taken with respect to the intersection of main rotor and tail rotor shafts (FS 100.4) and the Boeing-Vertol frame referenced to the main hub (FS 98.1).

TABLE III-1

BO-105C DESCRIPTIVE DATA

MAIN ROTOR

Blades	4
Radius	4.91 m (16.11 ft)
Chord	0.27 m (0.886 ft)
Section	NACA 23012 mod
Hub type	Hingeless
Twist	-8 deg linear
Shaft tilt	3 deg forward
Design rpm	403 to 433 (power on), 361 to 467 (power off)*
Hub location	FS 98.44, WL 61.2†
Blade flapping inertia	219.50 kg-m^2 (161.9 slug-ft^2)†

TAIL ROTOR

Blades	2
Radius	0.95 m (3.12 ft)
Chord	0.18 m (0.59 ft)
Twist	Zero
Gear ratio	5.24
Hub location	FS 335, WL 68.7, BL -12.5†

HORIZONTAL STABILIZER

Area	0.809 m^2 (8.71 ft^2)†
Aspect ratio	8.09†
Quarter chord location	FS 277.5, WL 25.84†
Dihedral	Zero†
Incidence	Zero†

---

* 424 rpm for tabulated data

† From Ref. 9.

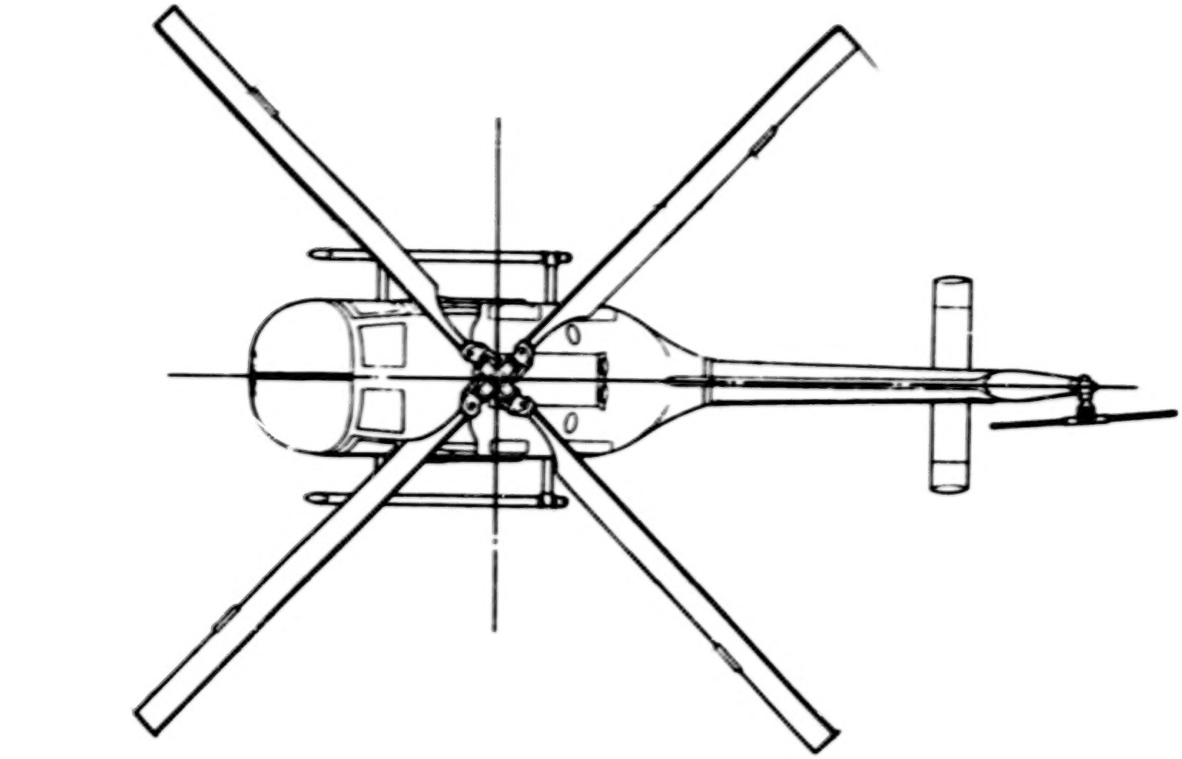

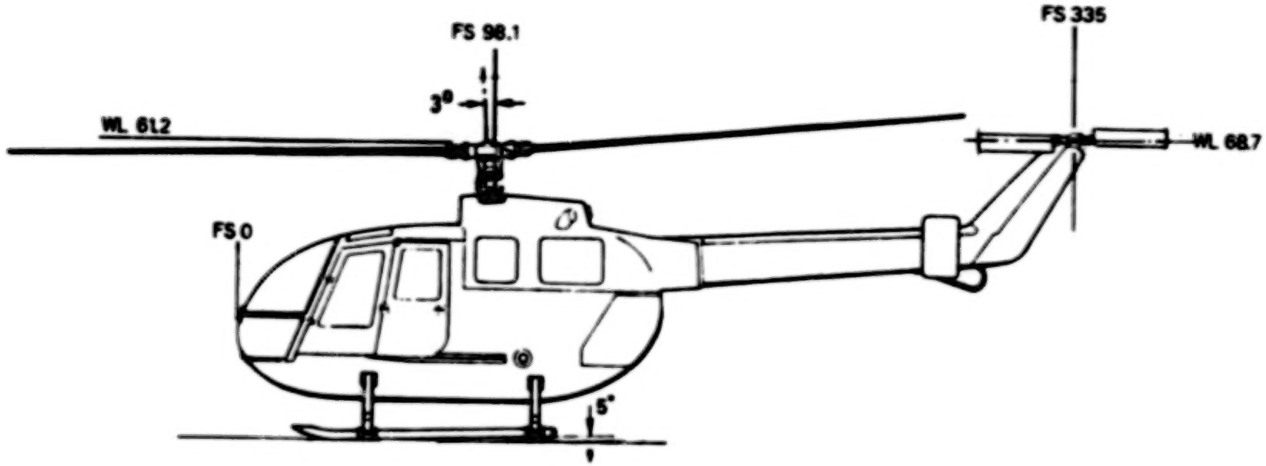

Figure III-1. BO-105C General Arrangement

a. Block Diagram

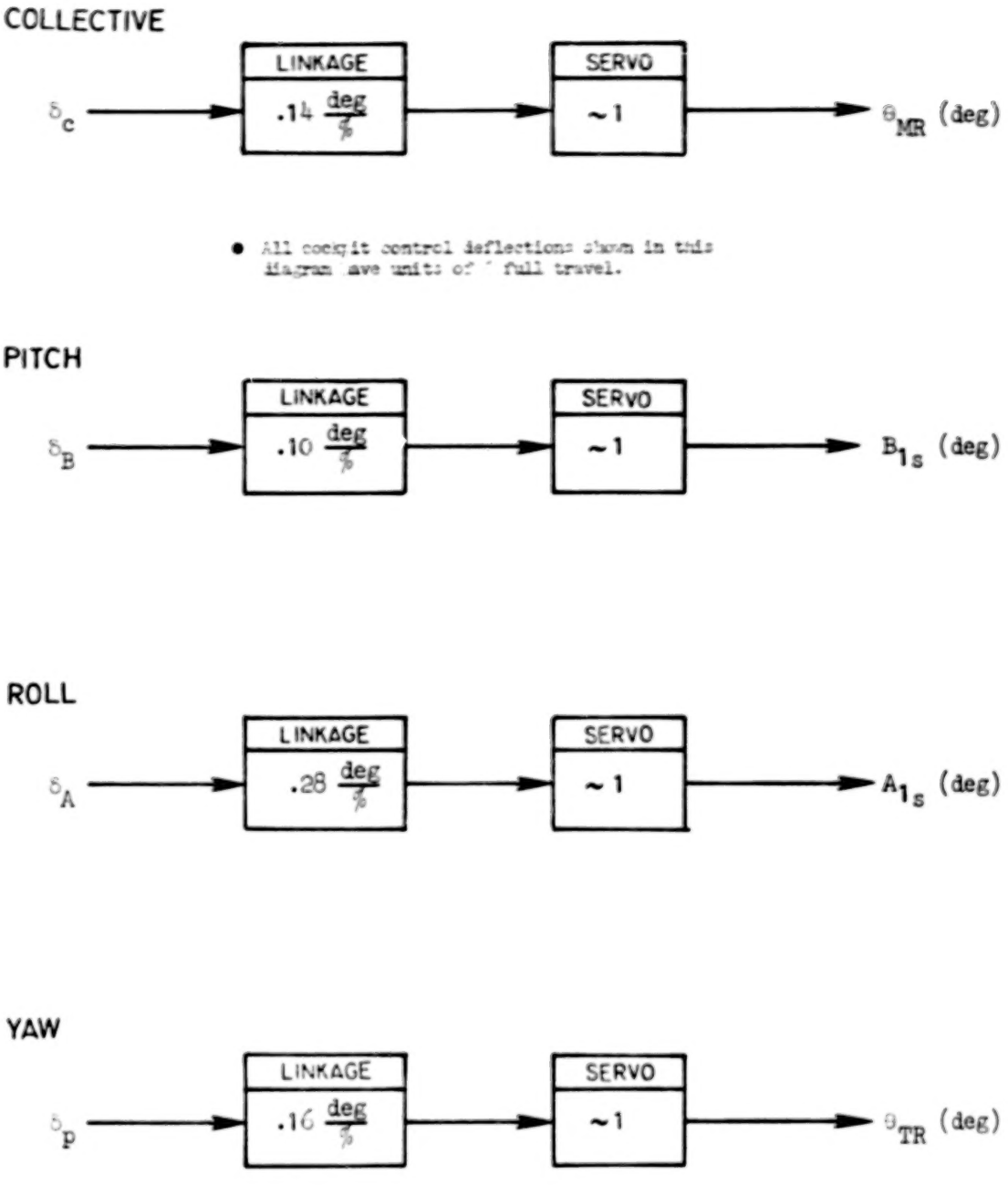

Figure III-2. BO-105C Control System Description

b. Cockpit Controller Characteristics

CONTROLLER	100% FULL TRAVEL cm (in)	FORCE GRADIENT N/cm (lb/in)	BREAKOUT N (lb)
Collective, δ_c	22.86 (9)	Adjustable	—
Longitudinal Cyclic, δ_B	30.78 (12.12)	1.75 (1)	2.63(1.5)
Lateral Cyclic, δ_A	21.97 (8.65)	1.75 (1)	1.31(.75)
Rotary Rudder Pedal, δ_p	11.02 (4.34)	zero	zero

Figure III-2 (Concluded)

a. Loading Envelope

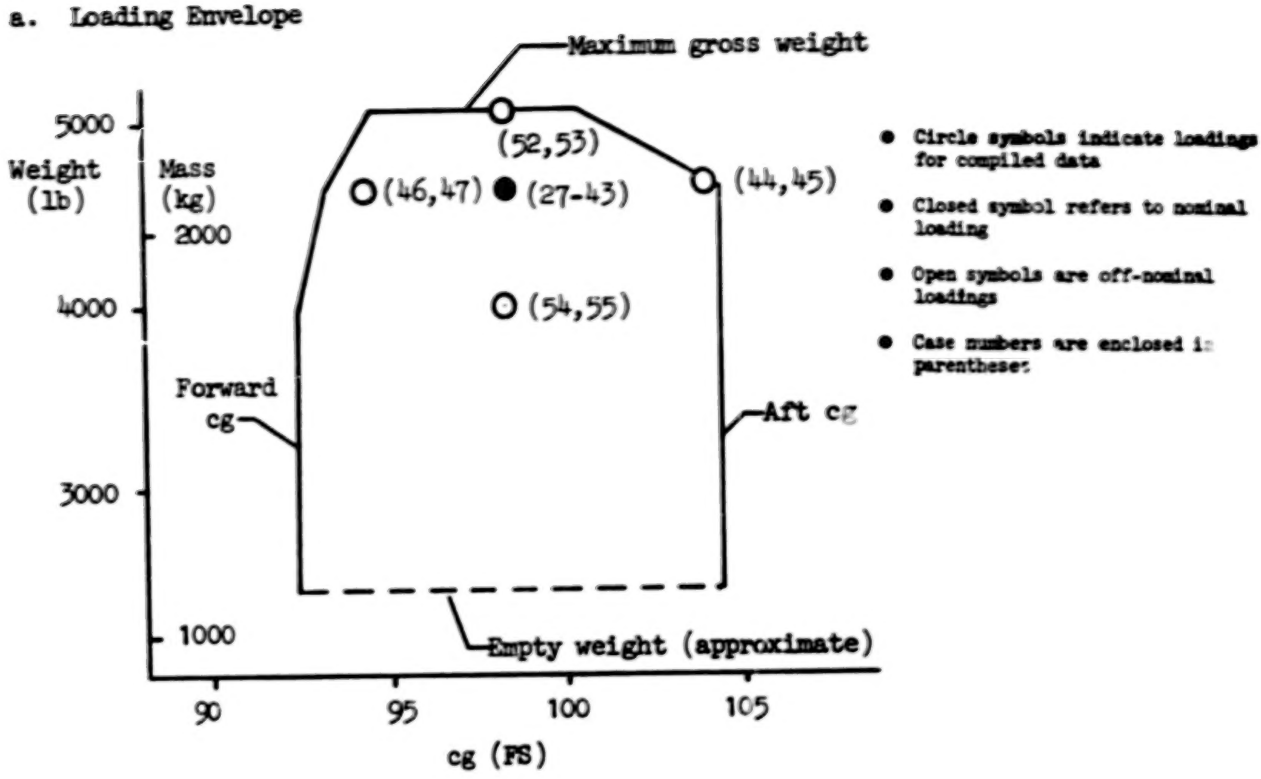

• The fuselage nose is the FS datum used here. Other datums in use are the MBB rotor reference axis (RRA) at FS 100.4 and the Boeing Vertol rotor hub reference at FS 98.1.

b. Moments of Inertia for Compiled Data

CONDITION	MASS (WEIGHT) kg (lb)	cg FS	I_x	I_y	I_z	I_{xz}
			kg-m^2(slug-ft^2)			
Nominal Weight	2096 (4620)	94.4 to 103.9	1803(1330)	4892(3608)	4428(3266)	Zero
Heavy Weight	2300 (5070)	98.4	1924(1419)	5063(3734)	4515(3330)	Zero
Light Weight	1814 (4000)	98.4	1638(1208)	4655(3433)	4298(2170)	Zero

Figure III-3. BO-105C Loading Summary

TABLE III-2

BO-105C INDEX OF FLIGHT CONDITIONS
FOR DERIVATIVES AND TRANSFER FUNCTION FACTORS

CASE	CONDITION	AIRSPEED kt	VERTICAL VELOCITY +/sec (ft/sec)	ALTITUDE m (ft)	MASS (WEIGHT) kg (lb)	cg FS	REPORT PAGE NUMBER	
							DERIVATIVES SI (US)	TRANSFER FUNCTIONS
27	Airspeed Variation	-20	Zero	Sea Level	2096(4620)	98.4	74 (84)	94
28		-10						
29		Hover						95*
30		10					75 (85)	
31		30						99*
32		46						102
33		60					76 (86)	104*
34		80						108
35		100						109
36		120					77 (87)	110
37		145						111
38	Climb	Zero	5.1 (16.7)					
39	Descent	Zero	-5.1 (-16.7)				78 (88)	
40	Climb	60	5.1 (16.7)					112
41	Descent	60	-5.1 (-16.7)					113
42	Climb	100	5.1 (16.7)				79 (89)	
43	Descent	100	-5.1 (-16.7)					
44	Aft cg	Hover	Zero			102.9		
45	Aft cg	100				102.9	80 (90)	
46	Forward cg	Hover				94.4		
47	Forward cg	100				94.4		
48	Operation at altitude	Hover		1524 (5000)		98.4	81 (91)	
49		100						
50		Hover		3048 (10000)				
51		100					82 (92)	
52	Heavy Weight	Hover		Sea Level	2300 (5070)			
53		100						
54	Light Weight	Hover			1814 (4000)		83 (93)	
55		100						

* Extended list of transfer function factors.

TABLE III-3
BO-105C STABILITY AND CONTROL DERIVATIVES -- SI UNITS
(BODY-FIXED FRL AXIS SYSTEM)

CASE 27 -20 KT LEVEL FLIGHT AT SEA LEVEL 2096 KG MID CG

PHI	THETA	PSI	ALPHA	BETA	GAMMA	OMR	B1S	A1S	OTR
-2.45	2.31	-0.09	-177.69	0.00	180.00	33.54	-1.36	-0.34	0.00

XDOT	ZDOT	UO	VO	WO	VTO
-10.29	0.00	-10.28	0.00	-0.41	10.29

	U	W	Q	V	P	R	DC	DB	DA	DP
X	-0.0270	0.0217	0.5671	0.0024	-0.1798	-0.0136	0.0585	0.0986	-0.0044	-0.0141
Z	0.2359	-0.4538	-0.1077	-0.0082	-0.0321	0.4118	-1.1180	-0.0563	-0.0119	-0.0047
M	0.0781	-0.0369	-3.4330	-0.0191	-0.0380	0.0206	-0.1067	-0.3868	0.0636	0.0131
Y	-0.0123	-0.0027	-0.2135	0.0047	-0.6048	0.1764	-0.0081	0.0031	0.0930	-0.1796
L'	-0.0725	-0.0025	2.2700	-0.2018	-9.3138	0.0622	-0.0134	0.1812	1.0107	-0.3643
N'	0.0338	-0.0005	0.1027	0.0361	-0.1038	-0.6328	0.[illegible]	0.0060	0.0241	0.5006

CASE 28 -10 KT LEVEL FLIGHT AT SEA LEVEL 2096 KG MID CG

PHI	THETA	PSI	ALPHA	BETA	GAMMA	OMR	B1S	A1S	OTR
-2.80	2.37	-0.11	-177.63	0.01	180.00	16.16	-0.96	-0.34	9.54

XDOT	ZDOT	UO	VO	WO	VTO
-5.14	0.00	-5.14	0.00	-0.21	5.14

	U	W	Q	V	P	R	DC	DB	DA	DP
X	-0.0228	0.0160	0.5297	0.0020	-0.2067	-0.0102	0.0536	0.0991	-0.0029	-0.0146
Z	0.1508	-0.3610	-0.0273	-0.0067	0.0184	0.6539	-1.1528	-0.0265	-0.0052	-0.0018
M	0.0834	-0.0151	-3.4094	-0.0144	-0.0250	0.0469	-0.0685	-0.3862	0.0669	0.0171
Y	-0.0085	-0.0002	-0.1768	0.0577	-0.6290	0.0710	-0.0078	0.0003	0.0948	-0.1910
L'	-0.0733	0.0005	2.2850	-0.1967	-9.4074	-0.1780	-0.0382	0.1765	1.0366	-0.3873
N'	0.0268	-0.0033	-0.0363	0.0232	0.1066	-0.3465	0.2165	0.0091	0.0263	0.5327

CASE 29 0 KT LEVEL FLIGHT AT SEA LEVEL 2096 KG MID CG

PHI	THETA	PSI	ALPHA	BETA	GAMMA	OMR	B1S	A1S	OTR
-2.97	2.64	0.00	2.63	-0.14	0.00	14.32	-0.42	-0.11	10.17

XDOT	ZDOT	UO	VO	WO	VTO
0.00	0.00	0.00	0.00	0.00	0.00

	U	W	Q	V	P	R	DC	DB	DA	DP
X	-0.0166	0.0124	0.4939	0.0004	-0.2211	-0.0343	0.0536	0.0947	-0.0005	-0.0144
Z	0.0100	-0.3317	0.1004	-0.0010	0.3449	0.5581	-1.1857	0.0051	-0.0019	-0.0016
M	0.0463	-0.0047	-3.1972	-0.0133	-0.0400	0.0439	-0.0317	-0.3810	0.0628	0.0227
Y	-0.0012	-0.0054	-0.1471	-0.0429	-0.5120	0.0625	-0.0059	0.0044	0.0962	-0.1966
L'	-0.0365	-0.0196	2.3836	-0.2075	-9.2439	-0.2240	-0.0502	0.1807	1.0412	-0.3987
N'	-0.0025	0.0041	-0.1215	0.0325	-0.0759	-0.1270	0.2225	-0.0018	0.0116	0.5485

TABLE III-3 CONTINUED
BO-105C STABILITY AND CONTROL DERIVATIVES -- SI UNITS
(BODY-FIXED FRL AXIS SYSTEM)

CASE 30 10 KT LEVEL FLIGHT AT SEA LEVEL 2096 KG MID CG

PHI	THETA	PSI	ALPHA	BETA	GAMMA	θMR	B1S	A1S	θTR
-2.76	2.27	-0.11	2.28	-0.00	0.00	14.12	-0.10	-0.28	9.70

XDOT	ZDOT	U0	V0	W0	VT0
5.14	0.00	5.14	-0.00	0.20	5.14

	U	W	Q	V	P	R	DC	DB	DA	DP
X	-0.0196	0.0148	0.5201	-0.0090	-0.2097	-0.0245	0.0388	0.0957	-0.0031	-0.0144
Z	-0.1320	-0.3768	0.0464	0.0025	-0.2505	0.4668	-1.1544	0.0364	0.0039	0.0024
M	0.0593	-0.0012	-3.4105	-0.0158	-0.8600	0.0494	0.0004	-0.3844	0.0674	0.0248
Y	0.0037	-0.0045	-0.1595	-0.1259	-0.6369	0.1249	-0.0116	0.0011	0.0986	-0.1919
L'	-0.0202	-0.0111	2.3180	-0.2290	-9.4386	0.0537	-0.0698	0.1739	1.0450	-0.3902
N'	-0.0233	0.0079	-0.0601	0.0474	0.1119	-0.4741	0.2203	0.0080	0.0153	0.5353

CASE 31 20 KT LEVEL FLIGHT AT SEA LEVEL 2096 KG MID CG

PHI	THETA	PSI	ALPHA	BETA	GAMMA	θMR	B1S	A1S	θTR
-2.41	2.07	-0.09	2.07	-0.00	0.00	13.56	0.33	-0.21	8.[illegible]

XDOT	ZDOT	U0	V0	W0	VT0
10.29	0.00	10.28	-0.00	0.37	10.29

	U	W	Q	V	P	R	DC	DB	DA	DP
X	-0.0154	0.0193	0.5601	-0.0004	-0.1695	-0.0301	0.0289	0.0938	-0.0052	-0.0131
Z	-0.1978	-0.4699	0.0196	0.0021	-0.1383	0.4159	-1.1252	0.0626	0.0111	0.0001
M	0.0671	0.0056	-3.4423	-0.0113	-0.8750	0.0500	0.0324	-0.3824	0.0645	0.0267
Y	0.0093	-0.0025	-0.1733	-0.0725	-0.5497	0.0276	-0.0084	0.0080	0.0962	-0.1808
L'	-0.0171	-0.0090	2.3300	-0.2236	-9.1973	-0.2979	-0.0659	0.1908	1.0183	-0.3684
N'	-0.0391	-0.0047	0.1101	0.0544	-0.2249	-0.2290	0.1861	-0.0022	0.0108	0.5046

CASE 32 40 KT LEVEL FLIGHT AT SEA LEVEL 2096 KG MID CG

PHI	THETA	PSI	ALPHA	BETA	GAMMA	θMR	B1S	A1S	θTR
-1.97	1.63	-0.06	1.63	-0.00	0.00	12.49	1.08	-0.10	5.[illegible]

XDOT	ZDOT	U0	V0	W0	VT0
20.58	0.00	20.57	-0.00	0.58	20.58

	U	W	Q	V	P	R	DC	DB	DA	DP
X	-0.0245	0.0253	0.6431	0.0013	-0.1339	-0.0260	0.0198	0.0884	-0.0091	-0.0122
Z	-0.1277	-0.6648	-0.0234	0.0023	-0.1362	0.3343	-1.2198	0.1334	0.0181	0.0032
M	0.0731	0.0327	-3.4724	-0.0077	-0.9120	0.0647	0.1010	-0.3826	0.0701	0.0236
Y	0.0044	-0.0001	-0.0563	-0.0779	-0.7423	0.0728	-0.0119	0.0118	0.0919	-0.1891
L'	-0.0358	-0.0175	2.3659	-0.2232	-9.4376	-0.2071	-0.0834	0.1990	1.0299	-0.3859
N'	-0.0190	-0.0269	-0.0142	0.0765	0.0934	-0.3490	0.1158	0.0035	0.0161	0.5278

TABLE III-3 CONTINUED
BO-105C STABILITY AND CONTROL DERIVATIVES -- SI UNITS
(BODY-FIXED FRL AXIS SYSTEM)

CASE 33 60 KT LEVEL FLIGHT AT SEA LEVEL 2096 KG MID CG

PHI	THETA	PSI	ALPHA	BETA	GAMMA	OMR	B1S	A1S	OTR
-2.08	0.59	-0.02	0.59	-0.00	0.00	12.28	1.97	-0.06	4.77

XDOT	ZDOT	UO	VO	WO	VTO
30.87	0.00	30.86	-0.00	0.32	30.87

	U	W	Q	V	P	R	DC	DB	DA	DP
X	-0.0338	0.0311	0.6384	0.0014	-0.1137	-0.0195	0.0190	0.0844	-0.0105	-0.0124
Z	-0.0564	-0.7886	0.0565	0.0039	-0.2896	3.4867	-1.3723	0.2157	0.0333	0.0061
M	0.0586	0.0423	-3.6151	-0.0061	-0.9460	0.0252	0.2033	-0.3922	0.0683	0.0254
Y	0.0059	-0.0051	-0.1146	-0.0910	-0.7155	0.1808	-0.0179	0.0116	0.0926	-0.2082
L'	-0.0327	-0.0338	2.3950	-0.2259	-9.3541	-0.0251	-0.1205	0.1915	1.0296	-0.4258
N'	-0.0181	-0.0304	0.2080	0.0825	-0.0220	-0.6627	0.1203	0.0148	0.0116	0.5810

CASE 34 80 KT LEVEL FLIGHT AT SEA LEVEL 2096 KG MID CG

PHI	THETA	PSI	ALPHA	BETA	GAMMA	OMR	B1S	A1S	OTR
-2.49	-0.86	0.03	-0.86	0.00	0.00	12.64	2.69	-0.01	4.54

XDOT	ZDOT	UO	VO	WO	VTO
41.16	0.00	41.1[illegible]	0.00	-0.62	41.16

	U	W	Q	V	P	R	DC	DB	DA	DP
X	-0.0423	0.0292	0.6129	0.0012	-0.1215	-0.0244	0.0062	0.0835	-0.0096	-0.0124
Z	-0.0158	-0.8734	0.0351	0.0091	-0.5216	0.4669	-1.5257	0.3076	0.0498	0.0062
M	0.0503	0.0559	-3.6267	-0.0060	-0.9620	0.0246	0.3010	-0.4088	0.0639	0.0273
Y	0.0060	-0.0078	-0.1784	-0.1083	-0.6730	0.1320	-0.0227	0.0114	0.0929	-0.2258
L'	-0.0334	-0.0471	2.4250	-0.2409	-9.1807	-0.1203	-0.1571	0.1901	1.0308	-0.4621
N'	-0.0108	-0.0235	0.4221	0.0911	-0.0607	-0.5253	0.1162	0.0205	0.0117	0.6303

CASE 35 100 KT LEVEL FLIGHT AT SEA LEVEL 2096 KG MID CG

PHI	THETA	PSI	ALPHA	BETA	GAMMA	OMR	B1S	A1S	OTR
-3.26	-2.80	0.15	-2.81	0.01	0.00	13.76	3.69	-0.02	5.09

XDOT	ZDOT	UO	VO	WO	VTO
51.44	0.00	51.39	0.01	-2.52	51.44

	U	W	Q	V	P	R	DC	DB	DA	DP
X	-0.0524	0.0269	0.5652	0.0013	-0.1618	-0.0305	-0.0130	0.0893	-0.0066	-0.0111
Z	0.0026	-0.9441	-0.0451	0.0097	-0.6807	0.5150	-1.6683	0.4034	0.0685	0.0092
M	0.0601	0.0821	-3.6032	-0.0055	-1.0170	0.0396	0.3979	-0.4312	0.0574	0.0341
Y	0.0101	-0.0083	-0.1336	-0.1265	-0.6283	0.1797	-0.0275	0.0107	0.0994	-0.2155
L'	-0.0269	-0.0601	2.4600	-0.2640	-9.0127	-0.0095	-0.1938	0.1879	1.0451	-0.4828
N'	-0.0177	-0.0107	0.2566	0.0912	-0.0359	-0.6641	0.1442	0.0180	0.0052	0.6579

MICROFILMED FROM
BEST AVAILABLE COPY

TABLE III-3 CONTINUED
BO-105C STABILITY AND CONTROL DERIVATIVES -- SI UNITS
(BODY-FIXED FRL AXIS SYSTEM)

CASE 36 120 KT LEVEL FLIGHT AT SEA LEVEL 2096 KG MID CG

PHI	THETA	PSI	ALPHA	BETA	GAMMA	OMR	B1S	A1S	OTR
-4.34	-5.25	0.39	-5.26	0.01	0.00	15.56	5.07	-0.09	6.30

XDOT	ZDOT	UO	VO	WO	VTO
61.73	0.00	61.47	0.01	-5.66	61.73

	U	W	Q	V	P	R	DC	DB	DA	DP
X	-0.0650	0.0209	0.5069	0.0014	-0.2098	-0.0409	-0.0315	0.0970	-0.0029	-0.0095
Z	0.0210	-0.9986	-0.1570	0.0061	-0.8304	0.6014	-1.7992	0.4969	0.0887	0.0141
M	0.0704	0.1259	-3.6633	-0.0050	-1.1000	0.0566	0.4979	-0.4630	0.0520	0.0493
Y	0.0126	-0.0052	-0.1919	-0.1462	-0.5315	0.2451	-0.0344	0.0095	0.1061	-0.2416
L'	-0.0317	-0.0727	2.4900	-0.2978	-8.7458	0.1204	-0.2402	0.1880	1.0605	-0.4974
N'	-0.0229	0.0065	0.3165	0.0947	-0.0070	-0.8654	0.2216	0.0025	0.0011	0.6752

CASE 37 145 KT LEVEL FLIGHT AT SEA LEVEL 2096 KG MID CG

PHI	THETA	PSI	ALPHA	BETA	GAMMA	OMR	B1S	A1S	OTR
-6.30	-8.75	0.96	-8.80	0.00	0.00	19.14	7.75	-0.30	10.17

XDOT	ZDOT	UO	VO	WO	VTO
74.59	0.00	73.72	0.01	-11.41	74.59

	U	W	Q	V	P	R	DC	DB	DA	DP
X	-0.0816	0.0269	0.1715	0.0003	-0.3670	-0.0854	-0.0151	0.1040	0.0103	-0.0073
Z	0.0363	-1.0427	-0.4021	-0.0028	-1.1458	0.81[illegible]1	-1.9490	0.6129	0.1226	0.0314
M	0.0871	0.1623	-3.5179	0.0001	-1.1450	0.051[illegible]	0.6085	-0.5084	0.0339	0.0986
Y	0.0158	-0.0205	-0.276[illegible]	-0.1734	-0.3146	0.2351	-0.0717	0.0095	0.1190	-0.2434
L'	-0.0296	-0.1367	2.5280	-0.1646	-8.3443	0.1336	-0.3890	0.2054	1.0921	-0.5056
N'	-0.0234	0.1376	-0.1268	0.0922	-0.0713	-0.9315	0.5558	-0.0631	0.0113	0.6804

CASE 38 0 KT LEVEL FLIGHT 1524 M 2096 KG MID CG

PHI	THETA	PSI	ALPHA	BETA	GAMMA	OMR	B1S	A1S	OTR
-3.11	2.64	0.00	2.64	-0.14	0.00	15.21	-0.46	-0.30	11.42

XDOT	ZDOT	UO	VO	WO	VTO
0.00	0.00	0.00	0.00	0.00	0.00

	U	W	Q	V	P	R	DC	DB	DA	DP
X	-0.0189	0.0135	0.4649	0.0013	-0.1460	-0.0222	0.0444	0.0919	-0.0032	-0.0135
Z	0.0094	-0.2937	-0.0008	-0.0038	0.0360	0.5342	-1.0599	0.0037	-0.0024	0.0017
M	0.0738	-0.0029	-3.7094	-0.0192	-0.8400	0.0303	-0.0274	-0.3750	0.0805	0.0229
Y	-0.0039	-0.0016	-0.2032	-0.0351	-0.5191	0.0609	-0.0047	0.0011	0.0942	-0.1799
L'	-0.0560	-0.0031	2.3000	-0.2335	-10.0929	-0.2295	-0.0605	0.2068	1.0116	-0.3641
N'	0.0030	0.0106	0.0954	0.0356	-0.0717	-[illegible]	0.2471	0.0039	0.0186	0.5013

TABLE III-3 CONTINUED

BO-105C STABILITY AND CONTROL DERIVATIVES -- SI UNITS

(BODY-FIXED FRL AXIS SYSTEM)

CASE 39 100 KT LEVEL FLIGHT 1524 M 2096 KG MID CG

PHI	THETA	PSI	ALPHA	BETA	GAMMA	OMR	B1S	A1S	OTR
-1.01	-2.06	0.11	-2.06	0.00	0.00	14.29	4.06	0.02	5.62

XDOT	YDOT	U0	V0	W0	VT0
51.44	0.00	51.41	0.00	-1.85	51.44

	U	W	Q	V	P	R	DC	DB	DA	DP
X	-0.0487	0.0171	0.6770	0.0026	-0.3959	-0.0291	-0.0245	0.0891	-0.0103	-0.0096
Z	-0.0014	-0.8113	-0.1179	0.0075	-0.6438	0.5344	-1.4399	0.3462	0.0615	0.0090
M	0.0624	0.0866	-4.0035	-0.0109	-1.0170	0.0429	0.3965	-0.4236	0.0738	0.0368
Y	0.0072	-0.0085	-0.0751	-0.1125	-0.6745	0.2005	-0.0317	0.0144	0.0958	-0.2097
L'	-0.0432	-0.0775	2.4600	-0.2639	-9.9772	-0.0392	-0.2706	0.2386	1.0162	-0.4306
N'	-0.0152	-0.0196	0.3631	0.0814	-0.2511	-0.7441	0.1386	0.0186	0.0035	0.5858

CASE 40 0 KT LEVEL FLIGHT 3048 M 2096 KG MID CG

PHI	THETA	PSI	ALPHA	BETA	GAMMA	OMR	B1S	A1S	OTR
-3.36	2.58	0.00	2.58	-0.15	0.00	16.25	-0.49	-0.34	13.40

XDOT	YDOT	U0	V0	W0	VT0
0.00	0.00	0.00	0.00	0.00	0.00

	U	W	Q	V	P	R	DC	DB	DA	DP
X	-0.0225	0.0099	0.5665	0.0023	-0.1365	-0.0426	0.0602	0.0941	-0.0040	-0.0123
Z	0.0089	-0.2617	0.0035	-0.0036	-0.1133	0.5083	-0.9265	0.0044	-0.0023	-0.0018
M	0.0806	-0.0016	-4.1245	-0.0223	-0.8400	0.0605	-0.0254	-0.3615	0.0972	0.0269
Y	-0.0033	-0.0023	-0.0903	-0.0366	-0.4082	0.0735	-0.0075	0.0053	0.0966	-0.1667
L'	-0.0742	-0.0071	2.3000	-0.2526	-8.1107	-0.2647	-0.0658	0.2636	0.9801	-0.3361
N'	-0.0002	0.0089	-0.0951	0.0285	-0.1633	-0.4151	0.2556	0.0037	0.0161	0.4652

CASE 41 100 KT LEVEL FLIGHT 3048 M 2096 KG MID CG

PHI	THETA	PSI	ALPHA	BETA	GAMMA	OMR	B1S	A1S	OTR
-2.83	-1.32	0.06	-1.32	0.00	0.00	14.91	4.63	0.12	6.16

XDOT	YDOT	U0	V0	W0	VT0
51.44	0.00	51.43	0.00	-1.18	51.44

	U	W	Q	V	P	R	DC	DB	DA	DP
X	-0.0424	0.0127	0.7443	0.0039	-0.0141	-0.0274	-0.0192	0.0859	-0.0130	-0.0081
Z	-0.0055	-0.6917	-0.1739	0.0061	-0.5262	0.4866	-1.2316	0.2992	0.0543	0.0099
M	0.0581	0.0858	-4.4379	-0.0181	-1.0170	0.0981	[illegible]	-0.4069	0.0910	0.0156
Y	0.0043	-0.0109	-0.0996	-0.1023	-0.7573	0.1596	-0.0367	0.0147	0.0991	-0.1861
L'	-0.0476	-0.1325	2.4653	-0.2600	-11.0415	-0.2771	-0.1549	0.2091	0.9711	-0.3702
N'	-0.0117	-0.0161	0.6595	0.0767	0.1169	-0.5041	0.1650	0.0296	0.0030	0.5162

TABLE III-3 CONTINUED
BO-105C STABILITY AND CONTROL DERIVATIVES -- SI UNITS
(BODY-FIXED FRL AXIS SYSTEM)

CASE 42 10 KT 5 M/S SEA LEVEL 2096 KG MID CG

PHI	THETA	PSI	ALPHA	BETA	GAMMA	GMR	B1S	A1S	GTR
-3.56	2.59	0.00	2.59	-0.16	0.00	15.44	-0.49	-0.38	11.57

XDOT	ZDOT	UO	VO	WO	VTO
0.00	-5.08	0.23	0.32	-5.06	5.08

	U	W	Q	V	P	R	DC	DB	DA	DP
X	-0.0254	0.0166	0.3891	-0.0001	-0.2709	-0.0357	0.0510	0.1005	0.0022	-0.0163
Z	0.0176	-0.4178	0.0158	-0.0075	-0.3178	0.5533	-1.1963	0.0040	0.0035	0.0006
M	0.0720	-0.0076	-3.2693	-0.0151	-0.8400	0.0484	-0.0308	-0.3882	0.0642	0.0278
Y	-0.1314	0.0083	-0.3162	-0.7210	-0.4676	0.0810	-0.0732	-0.0049	0.0986	-0.1993
L'	-0.0538	-0.0151	2.3000	-0.2675	-9.1836	-0.1779	-0.0790	0.1694	1.0499	-0.4036
N'	0.0086	0.0309	0.2104	0.0655	-0.0109	-0.3057	0.2837	0.0094	0.0228	0.5557

CASE 43 10 KT -5 M/S SEA LEVEL 2096 KG MID CG

PHI	THETA	PSI	ALPHA	BETA	GAMMA	GMR	B1S	A1S	GTR
-2.51	2.58	0.00	2.57	-0.11	0.00	13.44	-0.42	-0.27	8.74

XDOT	ZDOT	UO	VO	WO	VTO
0.00	5.08	-0.23	-0.22	5.07	5.08

	U	W	Q	V	P	R	DC	DB	DA	DP
X	-0.0176	0.0113	0.5642	0.0005	-0.1858	-0.0213	0.0527	0.0954	-0.0051	-0.0127
Z	0.0013	-0.2624	0.0804	0.0048	0.0531	0.4487	-1.1908	0.0068	0.0002	0.0010
M	0.0671	-0.0057	-3.4235	-0.0146	-0.8400	0.0282	-0.0313	-0.3828	0.0683	0.0157
Y	0.0515	0.0016	-0.2696	0.4420	-0.7040	0.1970	-0.0473	0.0080	0.0980	-0.1877
L'	-0.0526	0.0015	2.3000	-0.1922	-9.5464	0.0441	-0.0400	0.1903	1.0414	-0.3816
N'	0.0139	-0.0118	0.2864	0.0327	0.1299	-0.6473	0.1841	-0.0047	0.0104	0.5230

CASE 44 60 KT 5 M/S SEA LEVEL 2096 KG MID CG

PHI	THETA	PSI	ALPHA	BETA	GAMMA	GMR	B1S	A1S	GTR
-2.82	0.46	0.45	-9.01	-0.01	0.00	14.36	2.14	-0.16	7.21

XDOT	ZDOT	UO	VO	WO	VTO
30.45	-5.08	30.48	-0.00	-4.84	30.87

	U	W	Q	V	P	R	DC	DB	DA	DP
X	-0.0424	0.0265	0.5248	0.0008	-0.1935	-0.0297	0.0101	0.0931	-0.0038	-0.0127
Z	-0.0420	-0.7741	0.1169	0.0061	-0.2977	0.5308	-1.4006	0.2144	0.0339	0.0098
M	0.0845	0.0605	-3.4486	-0.0070	-0.9469	0.0402	0.1797	-0.3953	0.0653	0.0377
Y	0.0953	-0.0031	-0.2002	-0.0985	-0.5714	0.1713	-0.0186	0.0057	0.1002	-0.2091
L'	-0.0435	-0.0365	2.3950	-0.2635	-9.1673	-0.0112	-0.1322	0.1846	1.0473	-0.4286
N'	-0.0178	0.0047	0.2174	0.0440	-0.3758	-0.6151	0.2071	0.0036	0.0097	0.5835

TABLE III-3 CONTINUED
BO-105C STABILITY AND CONTROL DERIVATIVES -- SI UNITS
(BODY-FIXED FRL AXIS SYSTEM)

CASE 45 60 KT -5 M/S SEA LEVEL 2096 KG MID CG

PHI	THETA	PSI	ALPHA	BETA	GAMMA	OMB	B1S	A1S	OTB
-1.16	0.70	-0.21	10.17	-0.00	0.00	10.11	1.49	0.09	2.73

XDOT	ZDOT	UO	VO	WO	VTO
30.45	5.08	30.38	-0.00	5.45	30.87

	U	W	Q	V	P	R	DC	DB	DA	DP
X	-0.0296	0.0277	0.7998	0.0016	-0.0340	-0.0128	0.0206	0.0780	-0.0172	-0.0136
Z	-0.0671	-0.7936	-0.0305	0.0075	-0.3593	0.3421	-1.3541	0.2105	0.0330	0.0006
M	0.0424	0.0384	-3.6705	-0.0055	-0.9440	0.0104	0.2157	-0.3888	0.0718	0.0179
Y	0.0019	-0.0098	-0.0096	-0.0867	-0.8352	0.0730	-0.0136	0.0173	0.0862	-0.2060
L'	-0.0371	-0.0213	2.3950	-0.1909	-9.5188	-0.2480	-0.1105	0.2006	1.0171	-0.4207
N'	-0.0103	-0.0727	0.1501	0.0854	-0.0354	-0.3637	0.0347	0.0238	0.0116	0.5748

CASE 46 100 KT 5 M/S SEA LEVEL 2096 KG MID CG

PHI	THETA	PSI	ALPHA	BETA	GAMMA	OMB	B1S	A1S	OTB
-3.98	-2.72	0.57	-8.40	0.01	0.00	15.99	4.42	-0.21	7.50

XDOT	ZDOT	UO	VO	WO	VTO
51.19	-5.08	50.89	0.01	-7.52	51.44

	U	W	Q	V	P	R	DC	DB	DA	DP
X	-0.0584	0.0199	0.4803	0.0019	-0.1937	-0.0079	-0.0133	0.0983	-0.0019	-0.0111
Z	0.0068	-0.9333	-0.0872	0.0046	-0.7695	0.6082	-1.6644	0.3950	0.0696	0.0147
M	0.0793	0.1029	-3.6322	-0.0061	-1.0170	0.0253	0.3832	-0.4363	0.0576	0.0549
Y	0.0119	-0.0025	-0.2137	-0.1327	-0.4785	0.2475	-0.0299	0.0066	0.1092	-0.2338
L'	-0.0267	-0.0638	2.4600	-0.3028	-8.8091	0.1580	-0.2139	0.1875	1.0663	-0.4812
N'	-0.0215	0.0281	0.2076	0.0929	-0.0790	-0.8435	0.2569	-0.0056	0.0012	0.6531

CASE 47 100 KT -5 M/S SEA LEVEL 2096 KG MID CG

PHI	THETA	PSI	ALPHA	BETA	GAMMA	OMB	B1S	A1S	OTB
-2.44	-2.92	-0.12	2.75	0.00	0.00	11.42	2.74	0.17	3.19

XDOT	ZDOT	UO	VO	WO	VTO
51.19	5.08	51.39	0.00	2.47	51.44

	U	W	Q	V	P	R	DC	DB	DA	DP
X	-0.0473	0.0231	0.7082	0.0009	-0.0878	-0.0130	-0.0150	0.0805	-0.0133	-0.0138
Z	-0.0039	-0.9441	0.0063	0.0142	-0.6617	0.3297	-1.6701	0.4056	0.0680	0.0038
M	0.0402	0.0886	-1.6571	-0.0035	-1.0170	0.0345	0.4011	-0.4264	0.0607	0.0234
Y	0.0070	-0.0177	-0.1018	-0.1224	-0.7600	0.1531	-0.0248	0.0156	0.0887	-0.2168
L'	-0.0269	-0.0555	2.4600	-0.2211	-9.1746	0.0543	-0.1789	0.1932	1.0227	-0.4842
N'	-0.0061	-0.0520	0.4534	0.0982	0.0951	-0.5511	0.0316	0.0395	0.0117	0.6609

MICROFILMED FROM
BEST AVAILABLE COPY

TABLE OF CONTENTS

Section		Page	
I	INTRODUCTION	1	1/A14
	A. Background Information	2	1/B2
	B. Stability and Control Derivatives	4	1/B3
	C. Transfer Function Factors	11	1/B12
II	HUGHES OH-6A	19	1/C7
III	BOEING VERTOL BO-105C	67	1/F14
IV	BELL AH-1G	115	2/C8
V	BELL UH-1H	213	3/C10
VI	SIKORSKY CH-53D	303	4/C4
REFERENCES		358	4/G4
Appendix			
A	PROCEDURE FOR FORMULATING EQUATIONS OF MOTION	359	4/G5
B	ANALYSIS OF MULTILOOP SYSTEM RELATIONSHIPS	371	5/A7

TABLE III-3 CONTINUED
BO-105C STABILITY AND CONTROL DERIVATIVES -- SI UNITS
(BODY-FIXED FRL AXIS SYSTEM)

CASE 48 0 KT LEVEL FLIGHT AT SEA LEVEL 2096 KG APT CG

PHI	THETA	PSI	ALPHA	BETA	GAMMA	OMR	B1S	A1S	OTR
-2.94	3.67	0.00	3.67	-0.18	0.00	18.31	0.24	-0.46	10.34

XDOT	ZDOT	UO	VO	WO	VTO
0.00	0.00	0.00	0.00	0.00	0.00

	U	V	Q	V	P	R	DC	DB	DA	DP
X	-0.0178	0.0189	0.4802	0.0011	-0.1833	-0.0821	0.0691	0.0949	-0.0029	-0.0185
Z	0.0187	-0.3301	0.0326	-0.0072	-0.0846	0.4862	-1.1952	0.0048	-0.0011	-0.0003
M	0.0658	0.0113	-3.3788	-0.0129	-0.8400	0.0439	0.0284	-0.3839	0.0642	0.0229
Y	-0.0001	-0.0019	-0.1636	-0.0319	-0.4574	0.0530	-0.0088	0.0031	0.0964	-0.1970
L'	-0.0347	-0.0025	2.3000	-0.2073	-9.0283	-0.3233	-0.0564	0.1788	1.0384	-0.3996
N'	-0.0035	0.0001	-0.2183	0.0304	-0.3382	-0.3398	0.2217	-0.0007	0.0190	0.5357

CASE 49 100 KT LEVEL FLIGHT AT SEA LEVEL 2096 KG APT CG

PHI	THETA	PSI	ALPHA	BETA	GAMMA	OMR	B1S	A1S	OTR
-3.27	-1.99	0.11	-1.99	0.01	0.00	13.69	4.29	-0.13	5.26

XDOT	ZDOT	UO	VO	WO	VTO
51.44	0.00	51.41	0.00	-1.79	51.44

	U	V	Q	V	P	R	DC	DB	DA	DP
X	-0.0526	0.0365	0.5661	0.0016	-0.1481	-0.0389	0.0095	0.0827	-0.0078	-0.0107
Z	0.0127	-0.9821	0.0713	0.0061	-0.6964	0.5030	-1.6687	0.4048	0.0681	0.0093
M	0.0581	0.1258	-3.6141	-0.0056	-1.0170	0.0356	0.4891	-0.4537	0.0537	0.0342
Y	0.0102	-0.0076	-0.1401	-0.1262	-0.6315	0.1703	-0.0297	0.0100	0.0975	-0.2354
L'	-0.0269	-0.0560	2.4600	-0.2625	-9.0075	-0.1213	-0.1978	0.1867	1.0412	-0.4827
N'	-0.0147	-0.0081	0.1533	0.0844	-0.0931	-0.6449	0.1405	0.0208	0.0156	0.6411

CASE 50 0 KT LEVEL FLIGHT AT SEA LEVEL 2096 KG FWD CG

PHI	THETA	PSI	ALPHA	BETA	GAMMA	OMR	B1S	A1S	OTR
-3.01	2.02	0.00	2.02	-0.11	0.00	18.32	-0.90	-0.23	10.07

XDOT	ZDOT	UO	VO	WO	VTO
0.00	0.00	0.00	0.00	0.00	0.00

	U	V	Q	V	P	R	DC	DB	DA	DP
X	-0.0164	0.0107	0.4920	0.0002	-0.2210	-0.0323	0.0813	0.0971	-0.0018	-0.0184
Z	0.0016	-0.3352	-0.0146	-0.0011	-0.0383	0.4251	-1.1838	0.0053	0.0028	0.0002
M	0.0658	-0.0191	-3.3795	-0.0135	-0.8400	0.0823	-0.0758	-0.3845	0.0617	0.0221
Y	-0.0019	-0.0083	-0.2058	-0.0329	-0.5010	0.0478	-0.0045	0.0021	0.0982	-0.1963
L'	-0.0384	-0.0156	2.1000	-0.2079	-8.9592	-0.0568	-0.0486	0.1756	1.0160	-0.3982
N'	-0.0020	0.0075	0.1492	0.0116	-0.0298	-0.3175	0.2212	0.0037	0.0185	0.5561

TABLE III-3 CONTINUED
BO-105C STABILITY AND CONTROL DERIVATIVES -- SI UNITS
(BODY-FIXED FRL AXIS SYSTEM)

CASE 51 100 KT LEVEL FLIGHT AT SEA LEVEL 2096 KG FWD CG

PHI	THETA	PSI	ALPHA	BETA	GAMMA	OMR	B1S	A1S	OTP
-3.27	-3.83	0.19	-3.43	0.01	0.00	13.81	3.23	0.06	5.01

XDOT	ZDOT	UO	WO	WO	VTO
51.44	0.00	51.35	0.01	-3.04	51.44

	U	W	Q	V	P	R	DC	DB	DA	DP
X	-0.0525	0.0193	0.5623	0.0012	-0.1795	-0.0216	-0.0298	0.0926	-0.0057	-0.0114
Z	-0.0039	-0.3443	-0.1227	0.0117	-0.6242	0.5288	-1.6690	0.4028	0.0691	0.0092
M	0.0621	0.0527	-3.6019	-0.0054	-1.0170	0.0390	0.3311	-0.4155	-0.0599	0.0348
Y	0.0101	-0.0070	-0.1308	-0.1266	-0.6171	0.1859	-0.0270	0.0127	0.0998	-0.2356
L'	-0.0268	-0.0599	2.4600	-0.2624	-8.9286	0.0667	-0.1936	0.1918	1.0461	-0.4831
N'	-0.0189	-0.0179	0.3356	0.0987	-0.0334	-0.6769	0.1495	0.0123	-0.0003	0.6685

CASE 52 0 KT LEVEL FLIGHT AT SEA LEVEL 2300 KG MID CG

PHI	THETA	PSI	ALPHA	BETA	GAMMA	OMR	B1S	A1S	OTR
-2.97	2.59	0.00	2.59	-0.13	0.00	10.86	-0.46	-0.36	11.06

XDOT	ZDOT	UO	WO	WO	VTO
0.00	0.00	0.00	0.00	0.00	0.00

	U	W	Q	V	P	R	DC	DB	DA	DP
X	-0.0177	0.0140	0.4719	0.0000	-0.2257	-0.0320	0.0468	0.0948	-0.0009	-0.0134
Z	0.0078	-0.3069	0.0060	-0.0035	-0.0781	0.4157	-1.0986	0.0019	-0.0027	-0.0012
M	0.0698	-0.0043	-3.2978	-0.0118	-0.8400	0.0648	-0.0300	-0.3755	0.0629	0.0237
Y	-0.0027	-0.0016	-0.1946	-0.0318	-0.5151	0.0772	-0.0092	0.0027	0.0948	-0.1826
L'	-0.0395	-0.0021	2.7000	-0.2152	-8.7289	-0.1240	-0.0603	0.1678	0.9900	-0.3805
N'	0.0020	0.0069	0.0498	0.0383	-0.0403	-0.3804	0.2496	0.0021	0.0171	0.5482

CASE 53 100 KT LEVEL FLIGHT AT SEA LEVEL 2300 KG MID CG

PHI	THETA	PSI	ALPHA	BETA	GAMMA	OMR	B1S	A1S	OTR
-3.02	-2.31	0.12	-2.31	0.00	0.00	10.89	3.93	-0.03	5.37

XDOT	ZDOT	UO	WO	WO	VTO
51.44	0.00	51.40	0.00	-2.07	51.44

	U	W	Q	V	P	R	DC	DP	DA	DP
X	-0.0501	0.0205	0.5940	0.0017	-0.1557	-0.0251	-0.0214	0.0837	-0.0076	-0.0097
Z	0.0006	-0.8570	-0.0226	0.0049	-0.6205	0.4815	-1.5184	0.3675	0.0615	0.0075
M	0.0615	0.0818	-3.5477	-0.0059	-1.0170	0.0358	0.3957	-0.4247	0.0544	0.0346
Y	0.0086	-0.0091	-0.1316	-0.1174	-0.6625	0.1691	-0.0295	0.0112	0.0949	-0.2145
L'	-0.0384	-0.0517	2.4690	-0.2401	-8.5461	0.1117	-0.1945	0.1760	0.9901	-0.4525
N'	-0.0178	-0.0184	0.3062	0.0914	-0.0389	-0.6549	0.1972	0.0227	0.0079	0.6449

TABLE III-3 CONCLUDED
BO-105C STABILITY AND CONTROL DERIVATIVES -- SI UNITS
(BODY-FIXED FRL AXIS SYSTEM)

CASE 58 0 KT LEVEL FLIGHT AT SEA LEVEL 1814 KG MID CG

PHI	THETA	PSI	ALPHA	BETA	GAMMA	OMR	B1S	A1S	OTR
-2.95	2.67	0.00	2.67	-0.14	0.00	13.51	-0.37	-0.28	9.15

XDOT	ZDOT	UO	VO	WO	VTO
0.00	0.00	0.00	0.00	0.00	0.00

	U	W	Q	V	P	R	DC	DB	DA	DP
X	-0.0170	0.0148	0.4775	0.0002	-0.2296	-0.0319	0.0629	0.0962	-0.0018	-0.0162
Z	0.0113	-0.3769	0.0326	-0.0045	-0.0538	0.3833	-1.3290	0.0070	0.0010	0.0003
M	0.0620	-0.0059	-3.4952	-0.0130	-1.0170	0.0613	-0.0329	-0.3951	0.0690	0.0205
Y	-0.0031	-0.0047	-0.2204	-0.0356	-0.5363	0.0911	-0.0070	0.0006	0.0968	-0.2208
L'	-0.0398	-0.0121	2.4600	-0.2075	-9.9053	-0.1824	-0.0503	0.1933	1.1206	-0.4274
N'	0.0042	0.0080	0.0403	0.0365	-0.0569	-0.3445	0.2032	0.0033	0.0189	0.5493

CASE 55 100 KT LEVEL FLIGHT AT SEA LEVEL 1814 KG MID CG

PHI	THETA	PSI	ALPHA	BETA	GAMMA	OMR	B1S	A1S	OTR
-3.69	-3.77	0.24	-3.78	0.00	0.00	13.44	3.41	-0.01	8.94

XDOT	ZDOT	UO	VO	WO	VTO
51.44	0.00	51.33	0.00	-3.39	51.44

	U	W	Q	V	P	R	DC	DB	DA	DP
X	-0.0581	0.0358	0.5208	0.0007	-0.1862	-0.0263	0.0007	0.0870	-0.0053	-0.0132
Z	0.0107	-1.0924	-0.0948	0.0111	-0.7524	0.5546	-1.9340	0.0046	0.0780	0.0090
M	0.0573	0.0900	-3.7048	-0.0048	-1.0170	0.0833	0.4024	-0.4439	0.0592	0.0355
Y	0.0099	-0.0075	-0.1315	-0.1438	-0.6737	0.2938	-0.0292	0.0101	0.1017	-0.2729
L'	-0.0362	-0.0672	-2.4600	-0.2718	-9.7571	0.1912	-0.2060	0.2038	1.1295	-0.5334
N'	-0.0118	-0.0010	0.1656	0.0985	0.1494	-0.7804	0.1586	0.0090	0.0074	0.6800

MICROFILMED FROM
BEST AVAILABLE COPY

TABLE III-4
BO-105C STABILITY AND CONTROL DERIVATIVES -- US UNITS
(BODY-FIXED FRL AXIS SYSTEM)

CASE 27 -20 KT LEVEL FLIGHT AT SEA LEVEL 4620 LB MID CG

PHI	THETA	PSI	ALPHA	BETA	GAMMA	OMR	B1S	A1S	OTP
-2.45	2.31	-0.09	-177.69	0.00	180.00	11.56	-1.36	-0.34	8.00

XDOT	ZDOT	U0	V0	W0	VT0
-33.76	0.00	-33.73	0.00	-1.36	33.76

	U	W	Q	V	P	R	DC	DP	DA	DP
X	-0.0270	0.3217	1.8605	0.0024	-0.5871	-0.0447	0.4872	0.8218	-0.0367	-0.1233
Z	0.2359	-0.4538	-0.3535	-0.0062	-0.1752	1.4166	-9.3170	-0.4693	-0.0989	-0.0395
M	0.0238	-0.0112	-3.4330	-0.0055	-0.8380	0.0206	-0.2710	-0.9826	0.1614	0.0332
Y	-0.0123	-0.0027	-0.7004	0.0047	-1.9843	0.5788	-0.0678	0.0262	0.7750	-1.4965
L'	-0.0221	-0.0008	2.2700	-0.0615	-9.3138	0.0622	-0.0341	0.4601	2.5671	-0.9253
N'	0.0103	-0.0001	0.1027	0.0110	-0.1038	-0.6328	0.4989	0.0151	0.0613	1.2716

CASE 28 -10 KT LEVEL FLIGHT AT SEA LEVEL 4620 LB MID CG

PHI	THETA	PSI	ALPHA	BETA	GAMMA	OMR	B1S	A1S	OTP
-2.80	2.37	-0.11	-177.63	0.01	180.00	14.16	-0.96	-0.34	9.54

XDOT	ZDOT	U0	V0	W0	VT0
-16.88	0.00	-16.86	0.00	-0.70	16.88

	U	W	Q	V	P	R	DC	DP	DA	DP
X	-0.0228	0.0160	1.7378	0.0020	-0.6781	-0.0992	0.4465	0.8257	-0.0245	-0.1214
Z	0.1508	-0.3610	-3.0895	-0.0067	0.0605	1.4892	-9.6070	-0.2205	-0.0433	-0.0146
M	0.0254	-0.0046	-3.4094	-0.0044	-0.8250	0.0469	-0.1739	-0.9810	0.1699	0.0434
Y	-0.0085	-0.0002	-0.5801	0.0677	-2.3636	0.2329	-0.0653	0.0025	0.7903	-1.5919
L'	-0.0223	0.0001	2.2850	-0.0599	-9.4374	-0.1780	-0.0970	0.4482	2.6329	-0.9837
N'	0.0082	-0.0010	-0.0363	0.0071	0.1066	-0.3465	0.5498	0.0232	0.0668	1.3531

CASE 29 0 KT LEVEL FLIGHT AT SEA LEVEL 4620 LB MID CG

PHI	THETA	PSI	ALPHA	BETA	GAMMA	OMR	B1S	A1S	OTP
-2.97	2.64	0.00	2.63	-0.14	0.00	14.32	-0.42	-0.33	10.17

XDOT	ZDOT	U0	V0	W0	VT0
0.00	0.00	0.00	0.00	0.00	0.00

	U	W	Q	V	P	R	DC	DP	DA	DP
X	-0.0166	0.0124	1.6105	0.0004	-0.7260	-0.1192	0.4467	0.7894	-0.0045	-0.1202
Z	0.0100	-0.3317	0.3300	-0.0010	0.1473	1.8309	-9.8810	0.0429	-0.0160	-0.0131
M	0.0202	-0.0027	-3.3972	-0.0040	-0.8400	0.0439	-0.0805	-0.9727	0.1598	0.0577
Y	-0.0012	-0.0059	-0.4814	-0.0320	-1.7459	0.2350	-0.0489	0.0343	0.8014	-1.6381
L'	-0.0111	-0.0121	2.3000	-0.0612	-9.2419	-0.2240	-0.1275	0.4590	2.6446	-1.0126
N'	-0.0008	0.0018	-0.1215	0.0099	-0.3759	-0.1270	0.5651	-0.0085	0.0341	1.3911

TABLE III-4 CONTINUED

BO-105C STABILITY AND CONTROL DERIVATIVES -- US UNITS

(BODY-FIXED FRL AXIS SYSTEM)

CASE 30 10 KT LEVEL FLIGHT AT SEA LEVEL 4620 LB MID CG

PHI	THETA	PSI	ALPHA	BETA	GAMMA	ANP	BIS	AIS	OTR
-2.76	2.27	-0.11	2.28	-0.00	0.00	14.12	-0.10	-0.28	9.72

XDOT	ZDOT	UO	VO	WO	VTO
16.83	0.00	16.86	-0.00	0.67	16.88

	U	W	Q	V	P	R	DC	DB	DA	DP
X	-0.0196	0.0149	1.7064	-0.0000	-0.6183	-0.0433	0.1234	0.7976	-0.0262	-0.1203
Z	-0.1120	-0.3769	0.1521	0.0025	-0.3654	1.7316	-9.6200	0.3033	0.0325	0.0196
M	0.0181	-0.0004	-1.4105	-0.0060	-0.9500	0.2494	0.0211	-0.9764	0.1713	0.0611
Y	0.0037	-0.0045	-0.5214	-0.1253	-2.3497	0.4097	-0.9967	0.0092	0.8216	-1.5995
L'	-0.0062	-0.0036	2.3180	-0.0698	-9.6196	3.2537	-0.1774	0.4416	2.6500	-0.9912
N'	-0.0071	0.0026	-0.0601	0.0144	0.1119	-0.4741	0.5597	0.0204	0.0389	1.3596

CASE 31 20 KT LEVEL FLIGHT AT SEA LEVEL 4620 LB MID CG

PHI	THETA	PSI	ALPHA	BETA	GAMMA	ANP	BIS	AIS	OTR
-2.41	2.07	-0.03	2.37	-0.30	0.00	13.55	0.33	-0.21	8.34

XDOT	ZDOT	UO	VO	WO	VTO
33.76	0.00	33.73	-0.00	1.22	33.76

	U	W	Q	V	P	R	DC	DB	DA	DP
X	-0.0154	0.0193	1.8376	-0.0006	-0.5861	-0.0988	0.2412	0.7813	-0.0437	-0.1088
Z	-0.1978	-0.4699	0.0642	0.0021	-0.9539	1.3646	-9.3763	0.5217	0.0926	0.0017
M	0.0204	0.0017	-1.4421	-0.0034	-0.9753	0.0590	0.0823	-0.9712	0.1638	0.0677
Y	0.0093	-0.0026	-0.5697	-0.0725	-1.9036	0.0904	-0.0499	0.0663	0.8019	-1.5070
L'	-0.0052	-0.0027	2.3303	-0.0681	-9.1971	-0.2979	-0.1675	0.4846	2.5864	-0.9357
N'	-0.0119	-0.0314	0.1101	0.0166	-0.2249	-0.2290	0.4727	-0.0056	0.0274	1.2817

CASE 32 40 KT LEVEL FLIGHT AT SEA LEVEL 4620 LB MID CG

PHI	THETA	PSI	ALPHA	BETA	GAMMA	ANP	BIS	AIS	OTR
-1.37	1.63	-0.06	1.53	-0.00	0.00	12.49	1.08	-0.10	5.75

XDOT	ZDOT	UO	VO	WO	VTO
67.51	0.00	67.49	-0.00	1.92	67.51

	U	W	Q	V	P	R	DC	DB	DA	DP
X	-0.0245	0.0271	2.1099	-0.0013	-0.4364	-0.2951	0.1651	0.7361	-0.0759	-0.1036
Z	-0.1277	-0.6649	-0.2766	0.0021	-0.4473	1.0969	-10.1669	1.1111	0.1505	0.0269
M	0.0221	0.0143	-1.4724	-0.0324	-0.9120	0.0647	0.2566	-0.9717	0.1781	0.0599
Y	0.0046	-0.0033	-0.1867	-0.0773	-2.4173	0.1169	-0.0095	0.0901	0.7661	-1.5761
L'	-0.0109	-0.0051	2.3655	-0.0691	-9.4176	-1.2971	-0.2119	0.4827	2.4113	-0.9891
N'	-0.0058	-0.0011	-0.0192	0.0111	0.5111	-0.1498	0.1452	0.0048	0.0609	1.3607

TABLE III-4 CONTINUED
BO-105C STABILITY AND CONTROL DERIVATIVES -- US UNITS
(BODY-FIXED FRL AXIS SYSTEM)

CASE 33 60 KT LEVEL FLIGHT AT SEA LEVEL 4620 LB MID CG

PHI	THETA	PSI	ALPHA	BETA	GAMMA	θMR	B1S	A1S	θTR
-2.08	0.59	-0.02	0.59	-0.00	0.00	12.78	1.97	-0.06	4.77

XDOT	ZDOT	U0	V0	W0	VT0
101.27	0.00	101.26	-0.01	1.05	101.27

	U	W	Q	V	P	R	DC	DB	DA	DP
X	-0.0338	0.0311	2.0944	0.0014	-0.3731	-0.0640	0.1583	0.7037	-0.0875	-0.1034
Z	-0.0564	-0.7886	0.1852	0.0039	-0.9501	1.5967	-11.4355	1.7973	0.2775	0.0508
M	0.0179	0.0129	-3.6151	-0.0019	-0.9460	0.0252	0.5163	-0.9962	0.1735	0.0644
Y	0.0059	-0.0051	-0.3759	-0.0910	-2.3476	0.5933	-0.1493	0.0963	0.7716	-1.7346
L'	-0.0100	-0.0103	2.3950	-0.0689	-9.3541	-0.0251	-0.3060	0.4863	2.6151	-1.0816
N'	-0.0055	-0.0093	0.2090	0.0252	-0.0220	-0.6627	0.3055	0.0377	0.0293	1.4758

CASE 34 80 KT LEVEL FLIGHT AT SEA LEVEL 4620 LB MID CG

PHI	THETA	PSI	ALPHA	BETA	GAMMA	θMR	B1S	A1S	θTR
-2.49	-0.86	0.03	-0.86	0.00	0.00	12.64	2.69	-0.01	4.54

XDOT	ZDOT	U0	V0	W0	VT0
135.02	0.00	135.01	0.01	-2.02	135.02

	U	W	Q	V	P	R	DC	DB	DA	DP
X	-0.0423	0.0292	2.0108	0.0012	-0.3987	-0.0802	0.0515	0.6957	-0.0802	-0.1035
Z	-0.0158	-0.8734	0.0168	0.0091	-1.7114	1.5317	-12.7138	2.5634	0.4154	0.0513
M	0.0153	0.0170	-3.6267	-0.0018	-0.9620	0.0246	0.7645	-1.0394	0.1623	0.0695
Y	0.0060	-0.0079	-0.5854	-0.1083	-2.2082	0.4332	-0.1899	0.0947	0.7739	-1.8813
L'	-0.0102	-0.0144	2.4250	-0.0734	-9.1837	-0.1203	-0.3989	0.4828	2.6183	-1.1738
N'	-0.0033	-0.0072	0.4221	0.0278	-0.0607	-0.5253	0.2952	0.0521	0.0298	1.6010

CASE 35 100 KT LEVEL FLIGHT AT SEA LEVEL 4620 LB MID CG

PHI	THETA	PSI	ALPHA	BETA	GAMMA	θMR	B1S	A1S	θTR
-3.26	-2.80	0.15	-2.81	0.01	0.00	13.76	3.69	-0.02	5.09

XDOT	ZDOT	U0	V0	W0	VT0
168.78	0.00	168.58	0.02	-8.27	168.78

	U	W	Q	V	P	R	DC	DB	DA	DP
X	-0.0524	0.0269	1.8542	0.0013	-0.5107	-0.0999	-0.1082	0.7361	-0.0551	-0.0923
Z	0.0026	-0.9441	-0.1490	0.0097	-2.2311	1.6997	-13.9728	3.3620	0.5710	0.0764
M	0.0181	0.0250	-3.6032	-0.0017	-1.0170	0.0396	1.0107	-1.0951	0.1459	0.0866
Y	0.0101	-0.0081	-0.4334	-0.1265	-2.0611	0.5896	-0.2289	0.0892	0.8980	-1.9629
L'	-0.0082	-0.0181	2.4690	-0.0805	-9.0127	-0.0995	-0.4921	0.4772	2.6546	-1.2286
N'	-0.0054	-0.0031	0.2566	0.0284	-0.0159	-0.6641	0.3662	0.0456	0.0111	1.6710

MICROFILMED FROM
BEST AVAILABLE COPY

TABLE III-4 CONTINUED

BO-105C STABILITY AND CONTROL DERIVATIVES -- US UNITS

(BODY-FIXED FRL AXIS SYSTEM)

CASE 36 120 KT LEVEL FLIGHT AT SEA LEVEL 4620 LB MID CG

PHI	THETA	PSI	ALPHA	BETA	GAMMA	RHP	B1S	A1S	OTR
-4.34	-5.25	0.39	-5.26	0.01	0.00	15.56	5.07	-0.09	6.10

XDOT	ZDOT	U0	V0	W0	VT0
202.54	0.00	201.64	0.04	-18.57	202.58

	U	W	Q	V	P	R	DC	DB	DA	DP
X	-0.0650	0.0739	1.6611	0.0014	-3.6892	-2.1141	-0.2621	0.9080	-0.0244	-0.0791
Z	0.0210	-0.3986	-0.5151	0.0061	-2.7244	1.9733	-14.3931	4.1612	0.7392	0.1176
M	0.0215	0.0384	-3.6613	-0.0015	-1.1302	0.9566	1.2647	-1.1758	0.1320	0.1251
Y	0.0126	-0.0052	-0.6295	-0.1462	-1.7418	4.8042	-0.2567	0.0793	0.9846	-2.0135
L'	-0.0097	-0.0222	2.4900	-0.0968	-8.7458	0.1204	-0.6101	0.4774	2.6937	-1.2635
N'	-0.0070	0.0020	0.3165	0.0299	-0.0370	-0.4654	0.5629	0.0054	0.0027	1.7151

CASE 37 145 KT LEVEL FLIGHT AT SEA LEVEL 4620 LB MID CG

PHI	THETA	PSI	ALPHA	BETA	GAMMA	RHP	B1S	A1S	OTR
-6.10	-8.75	0.96	-8.80	0.00	0.00	19.14	7.75	-0.30	10.17

XDOT	ZDOT	U0	V0	W0	VT0
244.73	0.00	241.95	0.02	-17.44	244.73

	U	W	Q	V	P	R	DC	DB	DA	DP
X	-0.0816	0.0269	0.5627	0.0003	-1.2241	-0.2902	-0.1260	0.8669	0.0862	-0.0609
Z	0.0363	-1.0427	-1.3191	-0.0028	-1.7592	2.4409	-16.2418	5.1074	1.0219	0.2614
M	0.0265	0.0495	-3.5179	0.0000	-1.1450	0.0512	1.5456	-1.2913	0.0861	0.2505
Y	0.0158	-0.0205	-0.9064	-0.1734	-1.0129	0.7712	-0.5978	0.0792	0.9919	-2.0282
L'	-0.0090	-0.0417	2.5290	-0.1111	-8.1441	0.1316	-0.9980	0.5217	2.7738	-1.2841
N'	-0.0071	0.0419	-0.1268	0.0281	-0.0711	-0.9115	1.4117	-0.1603	0.0286	1.7283

CASE 38 0 KT LEVEL FLIGHT 5000 FT 4620 LB MID CG

PHI	THETA	PSI	ALPHA	BETA	GAMMA	RHP	B1S	A1S	OTR
-3.11	2.64	0.00	2.64	-0.14	0.00	15.21	-0.46	-0.30	11.42

XDOT	ZDOT	U0	V0	W0	VT0
0.00	0.00	0.00	0.00	0.00	0.00

	U	W	Q	V	P	R	DC	DB	DA	DP
X	-0.0189	0.0135	1.5254	0.0013	-0.4791	-0.0727	0.1701	0.7620	-0.0266	-0.1120
Z	0.0096	-0.2917	-0.0027	-0.0018	0.1141	1.7556	-8.7571	0.3110	-0.0198	0.0145
M	0.0225	-0.0009	-1.7934	-0.0059	-0.0603	0.0301	-0.0697	-0.9525	0.2045	0.0581
Y	-0.0039	-0.2916	-0.6853	-0.0371	-1.7339	0.1596	-0.0719	0.0036	0.7853	-1.4989
L'	-0.0171	-0.9516	2.1553	-0.0706	-13.7924	-1.2295	-0.1536	0.5253	2.5695	-0.9249
N'	0.0009	[illegible]	[illegible]	[illegible]	[illegible]	[illegible]	[illegible]	[illegible]	0.0472	1.7712

TABLE III-4 CONTINUED

BO-105C STABILITY AND CONTROL DERIVATIVES -- US UNITS

(BODY-FIXED FRL AXIS SYSTEM)

CASE 39 — 100 KT — LEVEL FLIGHT — 5000 FT — 4620 LB — MID CG

PHI	THETA	PSI	ALPHA	BETA	GAMMA	[illegible]	B1S	A1S	OTR
-3.01	-2.06	0.11	-2.06	0.00	0.00	14.29	4.06	0.02	5.62

XDOT	ZDOT	UO	VO	WO	VTO
168.78	0.00	168.67	0.00	-6.08	168.78

	U	W	Q	V	P	R	DC	DB	DA	DP
X	-0.0487	0.0171	2.1983	0.0026	-0.3165	-0.3956	-0.2040	0.7422	-0.0859	-0.0797
Z	-0.0016	-0.8113	-0.3867	0.0075	-2.1122	1.7536	-11.9888	2.8651	0.5128	0.0766
M	0.0190	0.0264	-4.9035	-0.0033	-1.0170	3.0429	1.0071	-1.0759	0.1873	0.0885
Y	0.0072	-0.0085	-0.2664	-0.1125	-2.2130	3.6576	-0.2642	0.1291	0.7986	-1.7675
L'	-0.0132	-0.0237	2.4600	-0.0806	-9.8777	-3.9392	-0.6876	0.6060	2.5811	-1.0933
N'	-0.0046	-0.0068	0.3631	0.0269	-0.3511	-3.7461	0.3521	0.0471	0.0090	1.4880

CASE 40 — 0 KT — LEVEL FLIGHT — 10000 FT — 4620 LB — MID CG

PHI	THETA	PSI	ALPHA	BETA	GAMMA	[illegible]	B1S	A1S	OTR
-3.36	2.58	0.00	2.58	-0.15	0.00	16.25	-0.49	-0.36	13.49

XDOT	ZDOT	UO	VO	WO	VTO
0.00	0.00	0.00	0.00	0.00	0.00

	U	W	Q	V	P	R	DC	DB	DA	DP
X	-0.0225	0.0099	1.8597	0.0023	-3.4477	-0.1396	0.3351	0.7844	-0.0397	-0.1022
Z	0.0089	-0.2617	0.0116	-0.0036	-0.3716	1.4675	-7.7207	0.0368	-0.0195	-0.0156
M	0.0246	-0.0005	-4.1245	-0.0068	-3.9603	0.0405	-0.0665	-0.9192	0.2469	0.0682
Y	-0.0033	-0.0023	-0.2635	-0.0366	-1.3391	0.2412	-0.0625	0.0445	0.7893	-1.3889
L'	-0.0226	-0.0072	2.3000	-0.9773	-9.1107	-0.2467	-0.1672	0.6696	2.4896	-0.8539
N'	-0.0001	0.0027	-0.3051	0.0097	-0.1611	-0.4153	0.6491	0.0095	0.0408	1.1816

CASE 41 — 100 KT — LEVEL FLIGHT — 10000 FT — 4620 LB — MID CG

PHI	THETA	PSI	ALPHA	BETA	GAMMA	[illegible]	B1S	A1S	OTR
-2.83	-1.32	0.36	-1.32	0.00	0.00	14.91	4.61	0.12	6.16

XDOT	ZDOT	UO	VO	WO	VTO
168.79	0.03	168.74	0.01	-3.88	168.78

	U	W	Q	V	P	R	DC	DB	DA	DP
X	-0.0424	0.0127	2.4552	0.0019	-0.3452	-0.3997	-0.1602	0.7158	-0.1074	-0.0691
Z	-0.0055	-0.6917	-0.5701	0.0061	-1.7242	1.5564	-10.2630	2.4910	0.4527	0.0824
M	0.0177	0.0261	-4.4079	-0.0026	-1.0170	0.0381	0.9509	-1.0115	0.2311	0.0838
Y	0.0067	-0.0109	-0.2311	-0.1023	-2.6836	0.1562	-0.2090	0.1226	0.7861	-1.5338
L'	-0.0144	-0.0112	2.4609	-0.0617	-11.3475	-0.2771	-0.3016	0.7369	2.8716	-0.9605
N'	-0.0036	-0.0059	0.0575	0.0136	0.3969	-0.5601	0.5390	0.0530	0.0026	1.1060

TABLE III-4 CONTINUED
BO-105C STABILITY AND CONTROL DERIVATIVES -- US UNITS
(BODY-FIXED FRL AXIS SYSTEM)

CASE 42 [illegible] KT [illegible] FT/MIN SEA LEVEL [illegible] LB MID CG

PHI	THETA	PSI	ALPHA	BETA	GAMMA	HDG	BIS	AIS	RTP
-4.56	2.59	0.00	2.59	-0.16	0.00	35.00	-0.69	-0.38	11.47

XDOT	ZDOT	UD	VD	WD	VTO
0.00	-16.67	0.75	1.73	-16.63	16.67

	U	V	Q	W	P	R	DC	DB	DA	DP
X	-0.0254	0.0[illegible]	1.2771	-0.0101	-0.[illegible]	-0.1171	0.4252	0.0375	0.0148	-0.1355
Z	0.0176	-0.4178	0.3519	-0.0175	-0.[illegible]	1.[illegible]	-0.[illegible]	0.0337	0.0289	0.5048
M	0.0299	-0.0323	-1.2491	-0.0046	-0.[illegible]	0.[illegible]	-0.[illegible]	-0.[illegible]	0.1611	0.0707
Y	-0.1394	0.0[illegible]	-1.0374	-0.7213	-1.[illegible]	0.2657	-0.4107	-0.0411	0.0219	-1.4409
L'	-0.0164	-0.0[illegible]	2.[illegible]	-0.0415	-0.[illegible]	-0.1779	-0.2006	0.[illegible]	2.[illegible]	-1.0250
N'	0.0026	0.[illegible]	0.2[illegible]	0.[illegible]	-0.[illegible]	-0.[illegible]	0.[illegible]	0.[illegible]	0.[illegible]	1.[illegible]

CASE 43 10 KT -1000 FT/MIN SEA LEVEL 4620 LB MID CG

PHI	THETA	PSI	ALPHA	BETA	GAMMA	HDG	BIS	AIS	RTP
-2.51	2.59	0.00	2.57	-0.11	0.00	13.00	-0.42	-0.27	8.74

XDOT	ZDOT	UD	VD	WD	VTO
0.00	16.67	-0.75	-0.73	16.63	16.67

	U	V	Q	W	P	R	DC	DB	DA	DP
X	-0.0176	0.0[illegible]	1.0511	0.0005	-0.[illegible]	-0.0700	0.[illegible]	0.[illegible]	-0.0425	-0.[illegible]
Z	0.0013	-0.2[illegible]	3.[illegible]	0.0048	0.[illegible]	1.[illegible]	-0.[illegible]	0.[illegible]	0.[illegible]	0.[illegible]
M	0.0205	-0.[illegible]	-3.[illegible]	-0.[illegible]	-0.[illegible]	0.[illegible]	-0.[illegible]	-0.[illegible]	0.[illegible]	0.[illegible]
Y	0.0515	0.[illegible]	-0.[illegible]	0.[illegible]	-2.[illegible]	0.[illegible]	-0.[illegible]	0.[illegible]	0.[illegible]	-1.[illegible]
L'	-0.[illegible]	0.[illegible]	2.[illegible]	-0.[illegible]	-0.[illegible]	0.[illegible]	-0.[illegible]	0.[illegible]	2.[illegible]	-0.[illegible]
N'	0.[illegible]	-0.[illegible]	0.[illegible]	0.[illegible]	0.[illegible]	-0.[illegible]	0.[illegible]	-0.[illegible]	0.[illegible]	1.[illegible]

CASE 44 60 KT [illegible] FT/MIN SEA LEVEL [illegible] LB MID CG

PHI	THETA	PSI	ALPHA	BETA	GAMMA	HDG	BIS	AIS	RTP
-2.92	0.46	0.45	-0.01	-0.01	0.00	79.36	2.16	-0.16	7.21

XDOT	ZDOT	UD	VD	WD	VTO
99.89	-16.67	100.01	-0.01	-15.69	101.27

	U	V	Q	W	P	R	DC	DB	DA	DP
X	-0.0424	0.[illegible]	1.7297	0.0114	-0.[illegible]	-0.[illegible]	0.[illegible]	0.[illegible]	-0.[illegible]	-0.[illegible]
Z	-0.[illegible]	-0.[illegible]	0.[illegible]	0.[illegible]	-0.[illegible]	1.[illegible]	-11.[illegible]	1.[illegible]	0.[illegible]	0.[illegible]
M	0.0258	0.[illegible]	-1.[illegible]	-0.[illegible]	-0.[illegible]	0.[illegible]	0.[illegible]	-1.[illegible]	0.[illegible]	0.[illegible]
Y	0.[illegible]	-0.[illegible]	-0.[illegible]	-0.[illegible]	-0.[illegible]	0.[illegible]	-0.[illegible]	0.[illegible]	0.[illegible]	-1.[illegible]
L'	-0.[illegible]	-0.[illegible]	2.[illegible]	-0.[illegible]	-0.[illegible]	-0.[illegible]	-0.[illegible]	0.[illegible]	2.[illegible]	-0.[illegible]
N'	-0.[illegible]	0.[illegible]	0.[illegible]	0.[illegible]	-0.[illegible]	-0.[illegible]	0.[illegible]	0.[illegible]	0.[illegible]	1.[illegible]

TABLE III-4 CONTINUED

BO-105C STABILITY AND CONTROL DERIVATIVES -- US UNITS

(BODY-FIXED FRL AXIS SYSTEM)

CASE 45 60 KT -1000 FT/MIN SEA LEVEL 4620 LB MID CG

PHI	THETA	PSI	ALPHA	BETA	GAMMA	AMR	B1S	A1S	OTR
-1.16	0.79	-0.21	10.17	-0.32	9.33	13.11	1.68	0.09	2.73

XDOT	ZDOT	U0	V0	W0	VT0
99.87	16.67	99.68	-0.00	17.68	101.27

	U	W	Q	V	P	R	DC	DB	DA	DP
X	-0.0296	0.0277	2.6242	0.0016	-0.1114	-0.0420	0.1711	0.6502	-0.1436	-0.1132
Z	-0.0671	-0.7336	-0.1301	0.0075	-1.1792	1.1725	-11.2840	1.7540	0.2754	0.0089
M	0.0129	0.0117	-1.6735	-0.0017	-0.9460	0.0139	0.5480	-0.9875	0.1823	0.0455
Y	0.0019	-0.0094	-0.0315	-0.0967	-2.7421	0.2196	-0.1131	0.1842	0.7185	-1.7169
L'	-0.0113	-0.0065	2.3950	-0.0582	-8.5184	-0.2480	-0.2807	0.5095	2.5810	-1.0685
N'	-0.0031	-0.0272	0.1501	0.0260	-0.3354	-0.3637	0.0981	0.0604	0.0294	1.4599

CASE 46 100 KT 1000 FT/MIN SEA LEVEL 4620 LB MID CG

PHI	THETA	PSI	ALPHA	BETA	GAMMA	AMR	B1S	A1S	OTR
-3.99	-2.72	0.57	-8.40	0.01	0.00	15.99	4.42	-0.21	7.50

XDOT	ZDOT	U0	V0	W0	VT0
167.96	-16.67	166.97	0.03	-24.66	168.78

	U	W	Q	V	P	R	DC	DB	DA	DP
X	-0.0584	0.0199	1.5759	0.0019	-0.6354	-0.0260	-0.1110	0.8109	-0.0160	-0.0927
Z	0.0068	-0.9111	-0.2862	0.0045	-2.5245	1.9953	-13.9700	1.2921	0.5798	0.1227
M	0.0242	0.0114	-1.6322	-0.0018	-1.0170	0.0253	0.9734	-1.1082	0.1463	0.1394
Y	0.0119	-0.0025	-0.7011	-0.1327	-1.5693	0.8122	-0.2492	0.0552	0.9096	-1.9482
L'	-0.0081	-0.0195	2.0600	-0.0923	-8.8091	0.1580	-0.5432	0.4761	2.7083	-1.2221
N'	-0.0066	0.0086	0.2076	0.2283	-0.0790	-0.8435	0.6526	-0.0143	0.3011	1.6589

CASE 47 100 KT -1000 FT/MIN SEA LEVEL 4620 LB MID CG

PHI	THETA	PSI	ALPHA	BETA	GAMMA	AMR	B1S	A1S	OTR
-2.48	-2.92	-0.12	2.75	0.00	0.00	11.42	2.74	0.17	3.19

XDOT	ZDOT	U0	V0	W0	VT0
167.96	16.67	169.59	0.01	8.10	169.79

	U	W	Q	V	P	R	DC	DB	DA	DP
X	-0.0471	0.0231	2.1215	0.0009	-0.2092	-0.0426	-0.1246	0.6712	-0.1196	-0.1151
Z	-0.0039	-0.9481	0.0207	0.0162	-2.1704	1.0117	-11.9196	1.1891	0.5665	0.0317
M	0.0122	0.0279	-1.6571	-0.0011	-1.0170	0.0145	1.0187	-1.0012	0.1561	0.0595
Y	0.0070	-0.0177	-0.1319	-0.1228	-2.6934	[illegible]	-0.2066	0.1192	0.7392	-1.9730
L'	-0.0092	-0.0165	2.4606	[illegible]	-4.1746	[illegible]	-0.3566	[illegible]	2.5979	-1.2290
N'	-0.0319	-0.0156	[illegible]	[illegible]	[illegible]	[illegible]	[illegible]	[illegible]	0.3237	1.6707

MICROFILMED FROM
BEST AVAILABLE COPY

TABLE III-4 CONTINUED
BO-105C STABILITY AND CONTROL DERIVATIVES -- US UNITS
(BODY-FIXED FRL AXIS SYSTEM)

CASE 48 0 KT LEVEL FLIGHT AT SEA LEVEL 4620 LB AFT CG

PHI	THETA	PSI	ALPHA	BETA	GAMMA	ØRR	BIS	AIS	ØTR
-2.94	1.47	0.00	1.47	-0.18	0.00	14.11	9.24	-0.46	10.34

XDOT	ZDOT	UO	VO	WO	VTO
0.00	0.00	0.00	0.00	0.00	0.00

	U	W	Q	V	P	R	DC	DB	DA	DP
X	-0.0174	0.0189	1.5755	0.0011	-0.6093	-0.1382	0.5760	0.7910	-0.0244	-0.1205
Z	0.0187	-0.3301	0.1371	-0.0072	-0.2121	1.5952	-9.9770	0.0400	-0.3091	-0.0021
M	0.0201	0.0034	-3.1788	-0.0039	-0.8403	0.0419	0.0721	-0.9751	0.1630	0.0581
Y	-0.0001	-0.0019	-0.5375	-0.0119	-1.5007	0.1740	-0.0731	0.0254	0.8011	-1.6414
L'	-0.0106	-0.0006	2.3050	-0.0632	-9.3291	-0.3213	-0.0423	0.4542	2.6376	-1.0151
N'	-0.0011	0.0000	-0.2181	0.0093	-0.3382	-0.3098	0.5631	-0.0018	0.0482	1.3606

CASE 49 100 KT LEVEL FLIGHT AT SEA LEVEL 4620 LB AFT CG

PHI	THETA	PSI	ALPHA	BETA	GAMMA	ØRR	BIS	AIS	ØTR
-1.27	-1.99	0.11	-1.99	0.01	0.00	13.69	4.29	-0.13	5.26

XDOT	ZDOT	UO	VO	WO	VTO
168.78	0.00	168.68	0.02	-5.87	168.78

	U	W	Q	V	P	R	DC	DB	DA	DP
X	-0.0526	0.0365	1.8573	0.0016	-0.4963	-0.1276	0.0795	0.6890	-0.0650	-0.0895
Z	0.0127	-0.9421	0.2341	0.0061	-2.2848	1.6502	-13.9060	3.3737	0.5673	0.0776
M	0.0165	0.0384	-3.6141	-0.0017	-1.0170	0.0356	1.2423	-1.1524	0.1361	0.0869
Y	0.0102	-0.0076	-0.4596	-0.1262	-2.0718	0.5596	-0.2472	0.0837	0.8120	-1.9619
L'	-0.0082	-0.0171	2.4600	-0.0809	-3.0075	-0.1213	-0.5015	0.4743	2.6446	-1.2261
N'	-0.0045	-0.0025	0.1531	0.0257	-0.0931	-0.6449	0.3568	0.0527	0.0397	1.6284

CASE 50 0 KT LEVEL FLIGHT AT SEA LEVEL 4620 LB FWD CG

PHI	THETA	PSI	ALPHA	BETA	GAMMA	ØRR	BIS	AIS	ØTR
-1.01	2.02	0.00	2.02	-0.11	0.00	14.32	-0.99	-0.23	10.07

XDOT	ZDOT	UO	VO	WO	VTO
0.00	0.00	0.00	0.00	0.00	0.00

	U	W	Q	V	P	R	DC	DB	DA	DP
X	-0.0164	0.0107	1.6142	0.0002	-0.7252	-0.1960	0.3440	0.8094	-0.0151	-0.1201
Z	0.0016	-0.1152	-0.0478	-0.0011	-0.1256	1.3947	-9.0652	0.0444	0.0213	0.0020
M	0.0199	-0.0058	-1.1795	-0.0041	-0.8409	0.0821	-0.1925	-0.9766	0.1566	0.0562
Y	-0.0019	-0.0041	-0.6752	-0.0129	-1.6504	0.2402	-0.0376	0.0131	0.7970	-1.6353
L'	-0.0117	-0.0040	2.3030	-0.0634	-0.3592	-0.0568	-0.1235	0.4459	2.5805	-1.0113
N'	-0.0006	0.0021	0.1402	0.0102	-0.0294	-0.1175	0.5670	0.0091	0.0369	1.4130

TABLE III-4 CONTINUED

BO-105C STABILITY AND CONTROL DERIVATIVES -- US UNITS

(BODY-FIXED FRL AXIS SYSTEM)

CASE 51 100 KT LEVEL FLIGHT AT SEA LEVEL 4820 LB FWD CG

PHI	THETA	PSI	ALPHA	BETA	GAMMA	OMR	B1S	A1S	OTR
-1.27	-3.41	0.19	-3.41	0.01	0.00	13.91	3.23	0.06	5.01

XDOT	ZDOT	U0	V0	W0	VT0
168.73	0.02	168.48	0.12	-10.11	168.78

	U	W	Q	V	P	R	DC	DB	DA	DP
X	-0.0425	0.3193	1.8448	0.0012	-0.5890	-0.0771	-0.2492	0.7716	-0.2676	-0.3949
Z	-0.0039	-0.9441	-0.4025	0.0137	-2.0493	1.7169	-11.9082	3.3564	0.5756	0.0770
M	0.0109	0.0163	-1.6019	-0.0017	-1.0170	0.0190	0.9610	-1.0554	0.1522	0.0898
Y	0.0101	-0.0070	-0.4290	-0.1266	-2.0267	0.6098	-0.2250	0.1054	0.9318	-1.9631
L'	-0.0082	-0.0192	2.4630	-0.0800	-8.9206	3.0667	-0.4917	0.4882	2.6572	-1.2270
N'	-0.0057	-0.0055	0.1356	0.0301	-0.3036	-0.6769	0.3798	0.0313	-0.0008	1.6980

CASE 52 0 KT LEVEL FLIGHT AT SEA LEVEL 5070 LB MID CG

PHI	THETA	PSI	ALPHA	BETA	GAMMA	OMR	B1S	A1S	OTR
-2.97	2.59	0.00	2.59	-0.13	0.00	18.86	-0.46	-0.36	11.06

XDOT	ZDOT	U0	V0	W0	VT0
0.00	0.00	0.00	0.00	0.00	0.00

	U	W	Q	V	P	R	DC	DB	DA	DP
X	-0.0177	0.0140	1.5483	0.0000	-3.7436	-0.1150	0.3898	0.7901	-0.0073	-0.1118
Z	0.0078	-0.3069	0.0197	-0.0035	-0.2561	1.1638	-9.1554	0.0162	-0.0225	-0.0101
M	0.0211	-0.0013	-3.2978	-0.0036	-0.8600	0.0544	-0.0761	-0.9537	0.1598	0.0601
Y	-0.0027	-0.0016	-0.6385	-0.0338	-1.6999	0.2532	-0.0768	0.0228	0.7896	-1.5213
L'	-0.0121	-0.0007	2.3330	-0.0656	-8.7289	-0.1240	-0.1532	0.4261	2.5165	-0.9665
N'	0.0006	0.0021	0.0698	0.0117	-0.0603	-0.3904	0.6341	0.0058	0.0416	1.3926

CASE 53 100 KT LEVEL FLIGHT AT SEA LEVEL 5070 LB MID CG

PHI	THETA	PSI	ALPHA	BETA	GAMMA	OMR	B1S	A1S	OTR
-3.02	-2.31	0.12	-2.31	0.00	0.00	14.08	3.93	-0.03	5.37

XDOT	ZDOT	U0	V0	W0	VT0
168.73	0.00	168.64	0.01	-6.80	168.78

	U	W	Q	V	P	R	DC	DB	DA	DP
X	-0.0501	0.1205	1.9689	0.0017	-0.5108	-0.0822	-0.1785	0.7676	-0.0836	-0.0811
Z	0.0306	-0.9570	-0.0741	0.0089	-2.0359	1.5798	-12.6236	1.0676	0.5298	0.0622
M	0.0188	0.0269	-1.5677	-0.0018	-1.0170	0.0358	1.0051	-1.0798	0.1611	0.0878
Y	0.0086	-0.0091	-0.4318	-0.1176	-2.1079	0.5546	-0.2655	0.0910	0.9077	-1.7872
L'	-0.0091	-0.0179	2.4699	-0.0791	-8.5961	3.1117	-0.4461	0.4471	2.5149	-1.1491
N'	-0.0078	-0.0076	0.1062	0.0228	-0.0199	-0.6569	0.1760	0.0173	0.0201	1.6101

TABLE III-4 CONCLUDED
BO-105C STABILITY AND CONTROL DERIVATIVES -- US UNITS
(BODY-FIXED FRL AXIS SYSTEM)

CASE 54 0 KT LEVEL FLIGHT AT SEA LEVEL 4000 LB MID CG

PHI	THETA	PSI	ALPHA	BETA	GAMMA	θMR	B1S	A1S	θTR
-2.95	2.67	0.00	2.67	-0.14	0.00	11.51	-0.37	-0.28	9.15

XDOT	ZDOT	UO	VO	WO	VTO
0.00	0.00	0.00	0.00	0.00	0.00

	U	W	Q	V	P	R	DC	DB	DA	DP
X	-0.0170	0.0148	1.5665	0.0092	-0.7534	-0.1048	0.5241	0.9020	-0.0148	-0.1353
Z	0.0113	-0.3769	0.1070	-0.0045	-0.1766	1.2575	-11.0744	0.0580	0.0086	0.0028
M	0.0199	-0.0038	-3.4952	-0.0040	-1.0170	0.0613	-0.0036	-1.0036	0.1752	0.0520
Y	-0.0031	-0.0047	-0.7233	-0.8356	-1.7597	0.2989	-0.0585	0.0048	0.8067	-1.8397
L'	-0.0120	-0.0037	2.4600	-0.0632	-9.9051	-0.1824	-0.1278	0.4910	2.8463	-1.0857
N'	0.0013	0.0024	0.0403	0.0111	-0.3569	-0.3445	0.5162	0.0724	0.0479	1.3951

CASE 55 100 KT LEVEL FLIGHT AT SEA LEVEL 4000 LB MID CG

PHI	THETA	PSI	ALPHA	BETA	GAMMA	θMR	B1S	A1S	θTR
-3.69	-3.77	0.24	-3.78	0.00	0.00	13.44	1.41	-0.01	4.94

XDOT	ZDOT	UO	VO	WO	VTO
168.78	0.00	168.41	0.01	-11.13	168.78

	U	W	Q	V	P	R	DC	DB	DA	DP
X	-0.0581	0.0358	1.7086	0.0007	-0.6109	-0.0862	0.0056	0.7251	-0.0419	-0.1102
Z	0.0107	-1.0924	-0.3111	0.0111	-2.4683	1.8197	-16.1164	3.8714	0.6498	0.0750
M	0.0175	0.0274	-1.7048	-0.0015	-1.0170	0.0433	1.0220	-1.1274	0.1503	0.0902
Y	0.0099	-0.0075	-0.4311	-0.1438	-2.2133	0.9638	-0.2435	0.0846	0.8471	-2.2741
L'	-0.0110	-0.0205	-2.4600	-0.0828	-9.7571	0.1412	-0.5232	0.5176	2.8690	-1.3548
N'	-0.0036	-0.0003	0.1656	0.0300	0.1494	-0.8804	0.4028	0.0228	0.0187	1.7271

MICROFILMED FROM
BEST AVAILABLE COPY

TABLE III-5
BO-105C TRANSFER FUNCTION FACTORS

CASE 27 -20KT

DENOMINATOR: (0) (.347) (.957) (3.96) (9.03)[-.510;.367][-.0616;.470]<.353>

CONTROL NUMERATORS:

PHI/DA 2.57 (0) (.347) (-.423) (1.05) (3.77)[-.0829;.478]<-.343>
THE/DB -.981 (0) (0) (.458) (.946) (9.74)[-.515;.350]<-.507>
PSI/DP 1.27 (.348) (3.98) (9.05)[-.0590;.428][-.0712;.459]<.615>

PHI/DB .462 (0) (.363) (-1.89)[-.478;.801][.905;1.10]<-.247>
THE/DA .164 (0) (.00545) (.288) (-.488) (-3.41)[.901;.750]<.000242>

PHI/DA ;THE/DB -2.60 (0) (0) (-.425) (.457) (1.04)<.524>
PHI/DA ;PSI/DP 3.31 (-.0354) (.347) (3.78)[-.0665;.456]<-.0320>
THE/DB ;PSI/DP -1.25 (0) (.454) (9.81)[-.0644;.429]<-1.03>

PHI/DB ;PSI/DP .637 (-.0241) (.683) (-1.59)[.0295;.410]<.00281>
PHI/DP ;THE/DB .817 (0) (0) (.450)[-.0262;1.71]<1.08>
PHI/DC ;THE/DB .129 (0) (0) (.484)[-.238;2.81]<.492>

THE/DA ;PSI/DP .203 (-.00386) (.369) (-3.93)[.187;.607]<.000420>
THE/DP ;PHI/DA .368 (0) (-.00355) (.352) (-.383) (2.50)<.000441>
THE/DC ;PHI/DA -.639 (0) (.0105) (-.0687) (-.473) (.853)<-.000186>

PSI/DA ;THE/DB -.0627 (0) (.456) (5.68)[-.191;1.71]<-.475>
PSI/DB ;PHI/DA .122 (-.0338) (.439) (2.04)[-.516;1.93]<-.0138>
XD/DB ;PHI/DA 2.08 (0) (-.425) (.462) (1.04)[.0971;6.32]<-17.0>

YD/DA ;THE/DB -83.6 (0) (-.403) (.457) (1.04)<16.0>
ZD/DB ;PHI/DA -1.23 (0) (1.07)[-.983;.441][.261;5.80]<-8.57>
XD/DC ;PHI/DA .286 (0) (-.0707) (-.461) (.853)[-.0224;8.53]<.578>

YD/DP ;THE/DB 1.47 (0) (.453)[-.372;1.43][.956;5.05]<34.7>
ZD/DC ;PHI/DA -23.9 (0) (-.403) (.997) (3.61)[-.0987;.424]<6.25>

PHI/DA ;THE/DB ;PSI/DP -3.36 (0) (-.0353) (.455)<.0540>
PHI/DC ;THE/DB ;PSI/DP -.241 (0) (-.126) (.709)<.0216>
THE/DC ;PHI/DA ;PSI/DP -1.01 (.0954)[-.918;.0173]<-.288E-4>

PSI/DC ;PHI/DA ;THE/DB -1.30 (0) (-.0238) (.463)<.0143>
XD/DB ;PHI/DA ;PSI/DP 2.70 (-.0353) (.460)[.0967;6.32]<-1.75>
YD/DA ;THE/DB ;PSI/DP -108. (0) (.454)<-49.0>

ZD/DC ;PHI/DA ;THE/DB 23.9 (0) (0) (-.406) (.949)<-9.20>
ZD/DC ;PHI/DA ;PSI/DP -30.8 (-.0351) (3.60)[-.0112;.389]<.590>
XD/DC ;PHI/DA ;THE/DB .228 (0) (-.0586) (-.794) (.851)<.00902>

XD/DC ;PHI/DA ;PSI/DP .550 (-.0198) (.0795)[.0159;7.71]<-.0515>
YD/DP ;PHI/DA ;THE/DB 3.25 (0) (.495) (1.04) (-1.09)<-1.82>
ZD/DB ;PHI/DA ;PSI/DP -1.58 (-.0355) (-.419)[.274;5.80]<-.791>

ZD/DC ;PHI/DA ;THE/DB ;PSI/DP 30.8 (0) (-.0339)<-1.04>
XD/DC ;PHI/DA ;THE/DB ;PSI/DP .265 (-.0274) (-.215)<.00156>

TABLE III-5 CONTINUED
BO-105C TRANSFER FUNCTION FACTORS

CASE 29 HOVER

DENOMINATOR: (0) (.260) (.349) (3.80) (8.93)[-.0541;.417][.0344;.864]<.124>
YD HD PD R P PL

CONTROL NUMERATORS:

PHI/DA 2.65 (0) (.00373) (.268) (.391) (3.59)[-.0391;.427]<.000688>
THE/DB -.972 (0) (0) (.284) (.352) (9.68)[.0147;.454]<-.199>
PSI/DP 1.39 (.330) (3.80) (8.95)[-.0507;.429][-.00939;.443]<.565>

PHI/DB .461 (0) (-.0121) (.257) (.397) (-1.51)[.206;.330]<.940E-4>
PHI/DP -.949 (0) (-.0693) (.0720) (.217) (3.42)[-.0725;.404]<.000573>
PHI/DC -.101 (0) (-.0520) (.261) (-1.41) (4.93)[-.00189;.420]<-.00169>

THE/DA .161 (0) (.00824) (.313) (-.620) (-4.52)[.684;.715]<.000591>
THE/DP 2.17 (0) (.00647) (.310) (1.74)[-.0128;.437]<.00144>
THE/DC -.0511 (0) (.0103) (.302) (-3.27) (7.90)[-.0255;.475]<.000931>

PSI/DA .0258 (.329) (3.39) (7.16)[-.0558;.433][-.124;2.29]<.203>
PSI/DB .0460 (.333) (-.496) (.820) (2.56) (8.59)[.0927;.418]<-.0238>
PSI/DC .569 (.322) (3.79) (8.94)[-.0703;.430][-.00791;.463]<.246>

YD/DB .790 (0) (.284) (.353) (8.97)[.0145;.454][.0990;6.53]<6.24>
YD/DA 86.6 (0) (.272) (.377) (3.53)[-.0402;.427]<5.72>
ZD/DC -9.88 (0) (.186) (3.80) (8.94)[-.0475;.419][.0350;.466]<-2.38>

XD/DC -.159 (0) (.300) (8.77)[-.0262;.475][-.981;5.54]<-2.89>
YD/DP -1.64 (0) (.0907) (.225) (2.33)[-.0716;.406][.890;5.29]<-.559>
ZD/DB -2.71 (0) (.514)[.102;.450][-.458;.841]<-.199>

PHI/DA ;THE/DB -2.65 (0) (0) (.00341) (.270) (.392)<-.000954>
PHI/DA ;PSI/DP 3.70 (.00264) (.333) (3.60)[-.0530;.433]<.00219>
THE/DB ;PSI/DP -1.36 (0) (.330) (9.72)[-.00950;.439]<-.840>

PHI/DB ;PSI/DP .684 (-.0150) (.318) (-1.35)[.285;.349]<.000538>
PHI/DP ;THE/DB .862 (0) (.00126) (-.0446)[.997;.161]<-.125E-5>
PHI/DC ;THE/DB .122 (0) (0) (-.0581) (.262) (-1.40)<.00261>

THE/DA ;PSI/DP .221 (-.00817) (.305) (-4.90)[.196;.350]<.000331>
THE/DP ;PHI/DA .497 (0) (.00233) (.00691) (.311) (2.13)<.527E-5>
THE/DC ;PHI/DA -.119 (0) (.00698) (.0172) (.285) (-3.24)<.132E-4>

PSI/DA ;THE/DB -.0325 (0) (.329) (4.97)[-.194;2.39]<-.303>
PSI/DB ;PHI/DA .110 (.0127) (.363) (-.390) (.482) (3.00)<-.000286>
PSI/DC ;THE/DB -.551 (0) (.320) (9.70)[-.0262;.464]<-.364>

PSI/DC ;PHI/DA 1.51 (.0138) (.297) (3.59)[-.0547;.430]<.00411>
XD/DB ;PHI/DA 2.09 (0) (.00403) (.270) (.392)[.116;6.38]<.0363>
XD/DB ;PSI/DP 1.10 (.330) (8.99)[-.00959;.439][.0968;6.54]<27.0>

YD/DA ;THE/DB -85.1 (0) (0) (.274) (.378)<-8.80>
YD/DA ;PSI/DP 121. (.332) (3.54)[-.0532;.431]<26.6>
ZD/DC ;PHI/DA -26.1 (0) (0) (.221) (3.60)[-.0349;.428]<-3.81>

ZD/DC ;THE/DB 9.59 (0) (0) (.198) (9.68)[.0173;.458]<1.85>
ZD/DC ;PSI/DP -13.8 (3.81) (8.94)[-.0528;.429][-.00874;.446]<-17.2>
XD/DC ;PHI/DA -.539 (0) (.0133) (.284)[-.897;4.80]<-.0471>

XD/DC ;THE/DB .0480 (0) (.270) (-2.03) (6.30)[-.0166;.527]<-.0460>
XD/DC ;PSI/DP 6.00 (.102) (9.08)[.0165;.438]<1.07>
YD/DP ;PHI/DA -3.57 (0) (.0565) (.207) (3.66)[.0593;.431]<-.0284>

YD/DP ;THE/DB 1.58 (0) (.00296) (2.99) (5.62)[.954;.191]<.00287>
ZD/DB ;PHI/DA -.770 (0) (.00723) (.410)[-.402;.868]<-.00172>
ZD/DB ;PSI/DP -5.06 [-.180;.413][.256;.580]<-.290>

PHI/DA ;THE/DB ;PSI/DP -3.72 (0) (.00250) (.332)<-.00309>
PHI/DC ;THE/DB ;PSI/DP -.318 (0) (-.0547) (.758)<.0132>
THE/DC ;PHI/DA ;PSI/DP -.949 (.00720) (-.0274) (.118)<.105E-4>

TABLE III-5 CONTINUED
BO-105C TRANSFER FUNCTION FACTORS

CASE 29 HOVER

```
CONTROL NUMERATORS CONCLUDED:
  PSI/DC ;PHI/DA ;THE/DB  -1.50  (0) (.0138) (.296)<-.00615>

  XD/DB ;PHI/DA ;PSI/DP   2.94  (.00261) (.332)[.116;6.38]<.104>
  YD/DA ;THE/DB ;PSI/DP  -120.  (0) (.331)<-39.6>
  ZD/DC ;PHI/DA ;THE/DB   26.1  (0) (.229)[.301;.00242]<.349E-4>

  ZD/DC ;THE/DB ;PSI/DP   13.4  (0) (9.72)[-.0112;.442]<25.5>
  ZD/DC ;PHI/DA ;PSI/DP  -36.6  (.00363) (3.60)[-.0527;.433]<-.0898>
  XD/DC ;PHI/DA ;THE/DB   .116  (0) (.0111) (.266) (-1.91)<-.000653>

  XD/DC ;PHI/DA ;PSI/DP   .150  (.0271) (.0595)[-.0313;9.95]<.0239>
  XD/DC ;THE/DB ;PSI/DP   1.00  (-.328)[.244;.446]<-.0658>
  YD/DP ;PHI/DA ;THE/DB   3.62  (0) (.00131) (.0684) (.214)<.695E-4>

  ZD/DB ;PHI/DA ;PSI/DP  -1.42  (0)[.0608;.605]<-.519>

  ZD/DC ;PHI/DA ;THE/DB ;PSI/DP   36.8  (0) (.00352)<.130>
  XD/DC ;PHI/DA ;THE/DB ;PSI/DP   .207  (.00536) (-.446)<-.000494>


GUST NUMERATORS:
  PHI/UG   .0116  (0) (0) (0) (.206) (-.610)[.918;.294]<-.000126>
  THE/UG  -.0200  (0) (0) (.278) (.347) (9.77)[.0189;.452]<-.00386>
  PSI/UG   .00174  (0) (0) (.331) (3.19) (8.71)[.157;.424]<.00287>

  PHI/VG   .0633  (0) (0) (.292) (.317) (3.61)[-.0431;.427]<.00386>
  THE/VG   .00356  (0) (0) (0) (.0186) (.309) (1.21) (-7.24)<-.000179>
  PSI/VG  -.0102  (0) (0) (.329) (3.82) (9.07)[-.0535;.434]<-.0219>

  PHI/WG   .00819  (0) (0) (-.103) (.286) (4.36)[-.0264;.426]<-.000190>
  THE/WG   .00330  (0) (0) (.0299) (.262) (7.20)[-.0727;.528]<.521E-4>
  PSI/WG  -.00154  (0) (.151) (-.252) (3.74) (9.03)[-.0322;.435]<.000378>

  PHI/PG   9.25  (0) (.0104) (.268) (.392) (3.66)[-.0376;.427]<.00675>
  THE/PG   .933  (0) (.0186) (.309)[.834;.980][-.602;1.12]<.00577>
  PSI/PG   .0475  (.329) (3.33) (6.24)[-.0535;.433][-.313;3.41]<.710>

  PHI/QG  -2.29  (0) (.234) (.570)[.763;.258][-.541;.447]<-.00405>
  THE/QG   3.39  (0) (.00675) (.285) (.355) (9.85)[.0221;.451]<.00465>
  PSI/QG  -.0377  (.331) (-1.48) (7.84)[.142;.406][.173;1.97]<.0924>

  PHI/RG  -.758  (0) (0) (-.0972) (.242)[.0268;.423]<.00319>
  THE/RG  -.242  (0) (0) (.00721) (.311) (9.03)[.00143;.470]<-.00108>
  PSI/RG   .330  (.327) (3.76) (8.93)[-.0892;.408][.0267;.453]<.124>

  XD/UG   .0163  (0) (.278) (.346) (8.98)[.0187;.452][.0916;6.56]<.124>
  ZD/UG   .0446  (0) (0) (0)[.113;.475][.867;1.45]<.0210>
  YD/VG   .0332  (0) (.286) (.330) (3.52)[-.0440;.426][.363;7.88]<.124>

  XD/WG   .00208  (0) (0) (.265) (-4.81) (7.73) (9.73)[-.0733;.530]<-.0559>
  ZD/WG   .331  (0) (.292) (3.80) (8.94)[-.0556;.418][.0323;.465]<.124>

 PHI/UG ;THE/DB  -.00203  (0) (0) (-.0123) (.252) (.466)<.292E-5>
 PHI/UG ;PSI/DP   .0177  (0) (0) (.198) (.353) (-.473)<-.000585>
 THE/UG ;PHI/DA  -.0548  (0) (0) (.00378) (.266) (.388)<-.214E-4>

 THE/UG ;PSI/DP  -.0280  (0) (.330) (9.83)[-.00891;.439]<-.0175>
 PSI/UG ;PHI/DA   .00429  (0) (0) (.0466) (.336) (3.29)<.000221>
 PSI/UG ;THE/DB  -.000767  (0) (.332) (9.50)[.00214;.553]<-.000741>

 PHI/VG ;THE/DB  -.0632  (0) (0) (0) (.298) (.321)<-.00603>
 PHI/VG ;PSI/DP   .0783  (0) (.329) (3.64)[-.0519;.433]<.0176>
 THE/VG ;PHI/DA  -.000752  (0) (0) (.00824) (.309) (9.59)<-.184E-4>

 THE/VG ;PSI/DP   .00630  (0) (0) (.146) (.428) (-1.42)<-.000561>
 PSI/VG ;PHI/DA  -.0286  (0  (.329) (3.59)[-.0528;.431]<-.00630>
 PSI/VG ;THE/DB   .0987  (0, (0) (-.00141) (.329)<-.458E-4>
```

TABLE III-5 CONTINUED
BO-105C TRANSFER FUNCTION FACTORS

CASE 29 HOVER

GUST NUMERATORS CONTINUED:

```
 PHI/WG ;THE/DB   -.00948 (0) (0) (0) (-.108) (.292)<.000299>
 PHI/WG ;PSI/DP    .00492 (0) (-.103) (4.53)[-.0331;.433]<-.000867>
 THE/WG ;PHI/DA    .00742 (0) (0) (.00676)[.759;.154]<.119E-5>

 THE/WG ;PSI/DP    .00479 (0) (.0320) (7.54)[-.0207;.448]<.000231>
 PSI/WG ;PHI/DA   -.00428 (0) (-.124) (3.56)[-.0194;.407]<.000313>
 PSI/WG ;THE/DB    .0136 (0) (-.0344) (.111) (-.791)<.990E-5>

 PHI/PG ;THE/DB   -9.37 (0) (0) (.0100) (.270) (.392)<-.00996>
 PHI/PG ;PSI/DP    12.9 (.00930) (.333) (3.66)[-.0512;.433]<.0274>
 THE/PG ;PHI/DA    .710 (0) (0) (.0418) (.273) (.397)<.00322>

 THE/PG ;PSI/DP    1.15 (.168)[.914;.470][-.615;.649]<.0180>
 PSI/PG ;PHI/DA   -.113 (.309) (.458) (3.44)[-.137;.359]<-.00707>
 PSI/PG ;THE/DB   -.0845 (0) (.329) (4.10)[-.370;3.04]<-1.05>

 PHI/QG ;THE/DB    .658 (0) (0) (.101)[.996;.303]<.00612>
 PHI/QG ;PSI/DP   -3.21 (.293)[.879;.334][-.604;.424]<-.0188>
 THE/QG ;PHI/DA    9.35 (0) (.272) (.397)[.962;.00668]<.450E-4>

 THE/QG ;PSI/DP    4.72 (.00677) (.330) (9.87)[-.00846;.439]<.0201>
 PSI/QG ;PHI/DA   -.0408 (.0459) (.337) (-2.60)[.398;2.08]<.00712>
 PSI/QG ;THE/DB   -1.20 (-.0575) (.327)[.322;.196]<.000868>

 PHI/RG ;THE/DB    .177 (0) (0) (0) (-.117) (.237)<-.00492>
 PHI/RG ;PSI/DP    .219 (-.0432)[-.766;.440][.497;.560]<-.000573>
 THE/RG ;PHI/DA   -.629 (0) (0) (.313)[.997;.0104]<-.212E-4>

 THE/RG ;PSI/DP   -.379 (.00646) (.313) (9.78)[-.00823;.439]<-.00144>
 PSI/RG ;PHI/DA    .874 (.00190) (.321) (3.58)[-.0483;.419]<.000688>
 PSI/RG ;THE/DB   -.309 (0) (.327) (9.72)[-.0169;.445]<-.194>

  XD/UG ;PHI/DA    .0431 (0) (.00378) (.266) (.387)[.115;6.39]<.000688>
  XD/UG ;THE/DB    .00275 (0) (.242) (-.266)[.600;.437]<-.337E-4>
  XD/UG ;PSI/DP    .0228 (.330) (8.99)[-.00899;.439][.0873;6.57]<.565>

  ZD/UG ;PHI/DA    .0123 (0) (.0302)[-.0195;.00127][.815;1.59]<.152E-8>
  ZD/UG ;THE/DB   -.00420 (0) (0) (.689) (9.81)[-.0560;.466]<-.00618>
  ZD/UG ;PSI/DP    .0608 (0) (0) (1.77)[-.183;.448]<.0216>

  YD/VG ;PHI/DA    .0372 (0) (.147) (.192) (3.56)[.0234;.429]<.000688>
  YD/VG ;THE/DB   -.0324 (0) (0) (.290) (.334)[.387;7.85]<-.194>
  YD/VG ;PSI/DP    .0294 (.329) (3.59)[-.0520;.433][.232;9.32]<.565>

  XD/WG ;PHI/DA    .0561 (0) (0) (-4.20)[.840;.127]<-.00382>
  XD/WG ;THE/DB   -.00463 (0) (0) (.290) (6.79)[.0113;.535]<-.00260>
  XD/WG ;PSI/DP    .00271 (0) (-5.22) (8.20) (9.99)[-.0211;.449]<-.233>

  ZD/WG ;PHI/DA    .876 (0) (.00375) (.318) (3.60)[-.0391;.428]<.000688>
  ZD/WG ;THE/DB   -.322 (0) (0) (.299) (9.69)[.0113;.456]<-.194>
  ZD/WG ;PSI/DP    .460 (3.81) (8.96)[-.0518;.429][-.0108;.443]<.565>

  XD/UG ; ZD/DC   -.161 (0) (.184) (8.98)[.0218;.456][.0917;6.57]<-2.38>
  YD/VG ; ZD/DC   -.318 (0) (.182) (3.51)[-.0389;.426][.353;8.01]<-2.38>

PHI/UG ;THE/DB ;PSI/DP  -.00352 (0) (-.0152) (.313)<.167E-4>
THE/UG ;PHI/DA ;PSI/DP  -.0775 (0) (.00264) (.313)<-.682E-4>
PSI/UG ;PHI/DA ;THE/DB  -.00202 (0) (.0128) (.344)<-.8882-5>

PHI/VG ;THE/DB ;PSI/DP  -.0795 (0) (0) (.329)<-.0261>
THE/VG ;PHI/DA ;PSI/DP   .00433 (0) (-.00823) (.289)<-.101E-4>
PSI/VG ;PHI/DA ;THE/DB   .0287 (0) (0) (.329)<.00943>

PHI/WG ;THE/DB ;PSI/DP  -.0120 (0) (0) (-.108)<.00130>
THE/WG ;PHI/DA ;PSI/DP   .0112 (0) (.00597) (.0211)<.141E-5>
PSI/WG ;PHI/DA ;THE/DB   .00397 (0) (0) (-.114)<-.000454>
```

TABLE III-5 CONTINUED
BO-105C TRANSFER FUNCTION FACTORS

CASE 29 HOVER

GUST NUMERATORS CONCLUDED:

```
 PHI/PG ;THE/DB ;PSI/DP  -13.2 (0) (.00864) (.332) <-.0378>
 THE/PG ;PHI/DA ;PSI/DP    1.01 (.00205) (.0773) (.335) <.537E-4>
 PSI/PG ;PHI/DA ;THE/DB    .0836 (0) (.298) (.455) <.0113>

 PHI/QG ;THE/DB ;PSI/DP    .812 (0) (.102) (.323) <.0267>
 THE/QG ;PHI/DA ;PSI/DP    13.1 (.00397) (.00515) (.332) <.890E-4>
 PSI/QG ;PHI/DA ;THE/DB   -.347 (-.00143) (.0749) (.326) <.121E-4>

 PHI/RG ;THE/DB ;PSI/DP   -.0270 (.00122) (-.0287) (1.32) <.125E-5>
 THE/RG ;PHI/DA ;PSI/DP   -1.04 (.00231) (.00698) (.314) <-.527E-5>
 PSI/RG ;PHI/DA ;THE/DB   -.848 (0) (.00355) (.321) <-.000965>

  XD/UG ;PHI/DA ;THE/DB    .000242 (0) (.0425) (.238) (-.258) <-.635E-6>
  XD/UG ;PHI/DA ;PSI/DP    .0609 (.00264) (.333) [.114;6.40 ]<.00219>
  XD/UG ;THE/DB ;PSI/DP    .00483 (.395) [-.0687;.255 ]<.000124>

  ZD/UG ;PHI/DA ;THE/DB   -.0116 (0) (0) (.00723) (.640) <-.535E-4>
  ZD/UG ;PHI/DA ;PSI/DP    .0170 (0) (0) (-.0514) (1.67) <-.00146>
  ZD/UG ;THE/DB ;PSI/DP   -.00581 (0) (9.88) [-.0139;.396 ]<-.00901>

  YD/VG ;PHI/DA ;THE/DB   -.0372 (0) (0) (.148) (.204) <-.00112>
  YD/VG ;PHI/DA ;PSI/DP    .0133 (.244) (3.25) [-.0650;.455 ]<.00219>
  YD/VG ;THE/DB ;PSI/DP   -.0293 (0) (.329) [.249;9.33 ]<-.840>

  XD/WG ;PHI/DA ;THE/DB   -.0114 (0) (0) (.0185) (.282) <-.596E-4>
  XD/WG ;PHI/DA ;PSI/DP    .0776 (0) (-.00291) (-8.63) <.00105>
  XD/WG ;THE/DB ;PSI/DP   -.00645 (0) (7.08) [.00628;.495 ]<-.0112>

  ZD/WG ;PHI/DA ;THE/DB   -.876 (0) (0) (.00338) (.321) <-.000950>
  ZD/WG ;PHI/DA ;PSI/DP    1.23 (.00263) (3.60) [-.0528;.433 ]<.00219>
  ZD/WG ;THE/DB ;PSI/DP   -.449 (0) (9.73) [-.0122;.438 ]<-.840>

  XD/UG ;  ZD/DC ;PHI/DA   -.426 (0) (0) (.219) [.115;6.40 ]<-3.81>
  XD/UG ;  ZD/DC ;THE/DB   -.0281 (0) (-.386) [.407;.488 ]<.00218>
  XD/UG ;  ZD/DC ;PSI/DP   -.226 (8.99) [-.0108;.441 ][ .0870;6.58 ]<-17.2>

  YD/VG ;  ZD/DC ;PHI/DA   -.342 (0) (.00896) (3.57) [.0157;.433 ]<-.00205>
  YD/VG ;  ZD/DC ;THE/DB    .311 (0) (0) (.195) [.377;7.98 ]<3.85>
  YD/VG ;  ZD/DC ;PSI/DP   -.294 (3.58) [-.0520;.433 ][ .233;9.33 ]<-17.2>

  XD/UG ;PHI/DA ;THE/DB ;PSI/DP    .000400 (0) (.508) <.000203>
  ZD/UG ;PHI/DA ;THE/DB ;PSI/DP   -.0161 (0) (0) <-.0161>
  YD/VG ;PHI/DA ;THE/DB ;PSI/DP   -.0132 (0) (.245) <-.00322>

  XD/WG ;PHI/DA ;THE/DB ;PSI/DP   -.0162 (0) (.00812) <-.667E-4>
  ZD/WG ;PHI/DA ;THE/DB ;PSI/DP   -1.23 (0) (.00250) <-.00309>
  XD/UG ;  ZD/DC ;PHI/DA ;THE/DB   -.00290 (0) (.0186) (-.646) <.349E-4>

  YD/VG ;  ZD/DC ;PHI/DA ;THE/DB    .343 (0) (.00872) (.0117) <.345E-4>
  YD/VG ;  ZD/DC ;PHI/DA ;PSI/DP   -.133 (3.32) [-.0593;.450 ]<-.0898>
  XD/WG ;  ZD/DC ;PHI/DA ;THE/DB    .0746 (0) (.0110) (.796) <.000653>

  XD/UG ;  ZD/DC ;PHI/DA ;THE/DB ;PSI/DP   -.00486 (.00169) <-.821E-5>
  YD/VG ;  ZD/DC ;PHI/DA ;THE/DB ;PSI/DP    .132 (0) <.132>
  YD/WG ;  ZD/DC ;PHI/DA ;THE/DB ;PSI/DP    .0918 (.00518) <.000494>
```

MICROFILMED FROM
BEST AVAILABLE COPY

TABLE III-5 CONTINUED
BO-105C TRANSFER FUNCTION FACTORS

CASE 31 20KT

DENOMINATOR: (0) (.0268) (.447) (3.89) (8.86) [-.0550;.439][.135;.919]<.0671>

CONTROL NUMERATORS:

PHI/DA 2.59 (0) (.450) (3.67) [-.103;.423][.203;.787]<.472>
THE/DA -.671 (0) (.0191) (.0491) (.458) (9.69) [.115;.918]<-.00311>
PSI/DP 1.29 (.889) (3.92) (8.97) [-.0806;.436][.0288;.881]<.783>

PHI/DB .486 (0) (.416) (-1.52) [-.353;1.02][.659;1.04]<-.149>
PHI/DP -.890 (0) (.451) (-1.68) (1.81) (3.35) [-.0868;.437]<.790>
PHI/DC -.151 (0) (.475) (-2.99) [-.0868;.485][.910;2.88]<.351>

THE/DA .165 (0) (.0210) (.467) (-.587) (-4.69) [.505;.872]<.00315>
THE/DP 2.02 (0) (.0209) (.465) (1.74) [-.0867;.395]<.00538>
THE/DC 1.08 (0) (.0205) [.111;.398][.963;.796]<.00221>

PSI/DA -.247 (.451) (1.58) (-2.67) (8.82) [-.0598;.884]<.447>
PSI/DB .0358 (.427) (-4.35) (7.49) [.0741;.432][-.00621;1.90]<-.333>
PSI/DC .469 (.468) (3.94) (8.92) [-.0370;.440][.0398;.476]<.335>

YD/DB .800 (0) (.0618) (.463) (9.01) [.114;.913][.0836;6.46]<7.12>
YD/DA 88.6 (.447) (3.61) [-.112;.426][.173;.781]<15.1>
ZD/DC -9.37 (0) (-.0279) (3.84) (8.86) [-.0477;.429][.131;.947]<1.47>

XD/DC -.0979 (0) (9.13) [.0907;.402][.971;.986][.0857;6.29]<-8.09>
YD/DP -1.51 (.447) (-1.45) [-.0470;.437][.883;2.23][.887;5.19]<25.1>
ZD/DB .490 (0) (.0772) (-.435) (8.82) [.127;.308][.298;5.87]<-8.18>

PHI/DA ;THE/DB -2.59 (0) (.00802) (.460) [.181;.770]<-.00567>
PHI/DA ;PSI/DP 3.33 (.0351) (.450) (3.69) [-.0472;.440]<.0378>
THE/DB ;PSI/DP -1.25 (.00770) (.460) (9.81) [.0326;.437]<-.00825>

PHI/DB ;PSI/DP .653 (.0102) (.251) (-1.48) [.513;.806]<-.000809>
PHI/DP ;THE/DB .804 (0) (.00770) (.461) (-1.68) (1.80) <-.00865>
PHI/DC ;THE/DB .0965 (0) (.00992) (.494) (3.14) (-3.10) <-.00890>

THE/DA ;PSI/DP .208 (.0172) (.469) (-4.58) [.198;.292]<-.000656>
THE/DP ;PHI/DA .461 (0) (.0177) (.188) (.463) (1.71) <.000957>
THE/DC ;PHI/DA .289 (0) (-.0198) (.238) [.830;.928]<-.000931>

PSI/DA ;THE/DB .287 (.00798) (.461) (1.85) (-2.70) <-.00525>
PSI/DB ;PHI/DA .0816 (.0162) (.839) (-8.25) [.0988;1.73]<-.0165>
PSI/DC ;THE/DB -.859 (.00995) (.482) (9.72) [.0811;.469]<-.00870>

PSI/DC ;PHI/DA 1.22 (.0516) (.458) (3.72) [-.0801;.888]<.0215>
XD/DB ;PHI/DA 2.09 (0) (.464) [.181;.769][.0999;6.30]<22.9>
YD/DB ;PSI/DP 1.03 (.868) (9.11) [.0325;.437][.0836;5.87]<38.6>

YD/DA ;THE/DB -93.1 (.00792) (.459) [.188;.766]<-.177>
YD/DA ;PSI/DP 108. (.888) (3.68) [-.0879;.439]<38.2>
ZD/DC ;PHI/DA -28.2 (0) (3.63) [-.117;.379][.169;.821]<-8.50>

ZD/DC ;THE/DB 9.04 (0) (9.67) [.661;.0306][.0861;.906]<.0672>
ZD/DC ;PSI/DP -12.0 (3.90) (8.97) [.0192;.432][-.0217;.835]<-10.4>
XD/DC ;PHI/DA -.259 (0) (.192) [.818;.863][.121;5.96]<-1.25>

XD/DC ;THE/DB .0111 (0) (-.0591) (.783) (4.06) [-.439;4.19]<-.0437>
YD/DC ;PSI/DP -.0781 (.164) (8.47) [-.0159;.853][.875;5.19]<-.618>
YD/DP ;PHI/DA -3.18 (.866) (-1.08) (1.08) (3.75) [-.0168;.881]<1.26>

YD/DP ;THE/DB 1.45 (.00770) (.459) (-1.47) (5.96) [.837;2.51]<-.279>
ZD/DB ;PHI/DA 1.24 (0) (-.429) [.292;.768][.319;5.77]<-10.3>
ZD/DB ;PSI/DP .624 (-.397) (8.90) [.0317;.437][.298;5.98]<-10.9>

PHI/DA ;THE/DB ;PSI/DP -3.35 (.00770) (.0351) (.460) <-.000816>
PHI/DC ;THE/DB ;PSI/DP -.256 (.00767) (-.0738) (.576) <.815E-4>
THE/DC ;PHI/DA ;PSI/DP .155 (.0110) (-.0805) (.286) <-.000117>

TABLE III-5 CONTINUED
BO-105C TRANSFER FUNCTION FACTORS

CASE 31 20KT

CONTROL NUMERATORS CONCLUDED:

```
PSI/DC ;PHI/DA ;THE/DB  -1.23 (.00933) (.0532) (.476)<-.000290>

YD/DB ;PHI/DA ;PSI/DP   2.69 (.0350) (.464)[.0999;6.31]<1.74>
YD/DA ;THE/DB ;PSI/DP  -107. (.00772) (.459)<-.381>
ZD/DC ;PHI/DA ;THE/DB   24.1 (0) (.00596)[.135;.753]<.0816>

ZD/DC ;THE/DB ;PSI/DP   11.7 (.00589) (9.83)[.0323;.438]<.121>
ZD/DC ;PHI/DA ;PSI/DP  -31.3 (.0363) (3.66)[-.0353;.429]<-.764>
YD/DC ;PHI/DA ;THE/DB   .0262 (0) (1.88)[-.358;1.10]<.0600>

YD/DC ;PHI/DA ;PSI/DP  -.184 (.0157) (.209)[.258;5.48]<-.0178>
YD/DC ;THE/DB ;PSI/DP   .498 (1.41)[-.0856;.398]<.109>
YD/DP ;PHI/DA ;THE/DB   3.21 (.00770) (.464) (1.09) (-1.12)<-.0140>

ZD/DB ;PHI/DA ;PSI/DP   1.58 (.0350) (-.399)[.314;5.82]<-.749>

ZD/DC ;PHI/DA ;THE/DB ;PSI/DP   31.8 (.00545) (.0359)<.00613>
YD/DC ;PHI/DA ;THE/DB ;PSI/DP   .0598 (.0369) (2.57)<.00567>
```

GUST NUMERATORS:

```
PHI/UG   .00578 (0) (0) (0) (.455) (1.16)[-.836;3.35]<.0383>
THE/UG  -.0200 (0) (0) (.0268) (.448) (9.51)[.0508;.957]<-.00209>
PSI/UG   .0128 (0) (0) (.451) (3.44) (8.70)[.0900;.815]<.0328>

PHI/VG   .0676 (0) (0) (.114) (.437) (3.65)[.0719;.813]<.00209>
THE/VG  -.0410 (0) (0) (-.00638) (.0225) (.471) (1.12)<.3108-5>
PSI/VG  -.0166 (0) (0) (.489) (3.98) (9.46)[-.0528;.885]<-.0558>

PHI/WG  -.00466 (0) (0) (-1.27) (1.82)[-.0358;.389]<.00131>
THE/WG  -.00108 (0) (0) (9.20)[.880;.0383][-.0978;.976]<-.1078-4>
PSI/WG   .00174 (0) (3.71) (8.83)[.395;.369][-.0184;.815]<.00138>

PHI/PG   9.21 (0) (.489) (3.78)[-.115;.435][.213;.906]<1.90>
THE/PG   .882 (0) (.0215) (.471)[.785;1.01][-.491;1.28]<.0189>
PSI/PG   .196 (.450) (2.88) (5.10)[-.0530;.885][-.411;2.87]<1.80>

PHI/QG  -2.38 (0) (.805) (-.755)[.778;1.06][-.206;1.15]<1.06>
THE/QG   3.47 (0) (.0108) (.0479) (.459) (9.84)[.118;.916]<.0121>
PSI/QG  -.296 (.421) (-1.64) (7.64)[.0901;.431][.327;2.05]<1.01>

PHI/RG   .0719 (0) (.488) (1.89)[-.0278;.297][-.610;3.91]<.0705>
THE/RG  -.217 (0) (-.00502) (.0222) (.467) (9.55)[.00862;.988]<.000104>
PSI/RG   .235 (.470) (3.62) (8.76)[-.0907;.310][.113;.887]<.0671>

YD/UG   .0228 (0) (.0267) (.489) (9.97)[.0400;.954][.187;5.53]<.0671>
ZD/UG   .218 (0) (0) (.0241) (.586) (3.32) (8.86)[.120;.990]<.0704>
YD/VG   .0732 (0) (.114) (.446) (3.34)[.0706;.910][.673;5.67]<.0671>

XD/WG  -.00316 (0) (0) (-.0270) (-1.49) (6.41) (8.79)[-.0603;1.03]<-.00755>
ZD/WG   .462 (0) (.0267) (1.88) (8.96)[-.0515;.838][.135;.917]<.0671>

PHI/UG ;THE/DP   .00409 (0) (0) (.432) (-2.40) (2.55)<-.0108>
PHI/UG ;PSI/DP   .0188 (0) (-.0173) (-.548)[.986;.839]<.3838-4>
THE/UG ;PHI/DA  -.0526 (0) (0) (.451)[.0981;.787]<-.0187>

THE/UG ;PSI/DP  -.0271 (0) (.450) (9.96)[.0330;.836]<-.0211>
PSI/UG ;PHI/DA   .0311 (0) (-.00658) (.0668) (.451) (1.19)<-.2068-4>
PSI/UG ;THE/DB  -.0117 (0) (.440) (9.75)[.0809;.853]<-.0103>

PHI/VG ;THE/DP  -.0669 (0) (0) (.0121) (.223) (.451)<-.9119-4>
PHI/VG ;PSI/DP   .0716 (0) (.489) (1.72)[-.0960;.880]<.0211>
THE/VG ;PHI/DA  -.00819 (0) (0) (.0151) (.470) (2.56)<-.7618-4>

THE/VG ;PSI/DP   .00546 (0) (-.0196) (.169) (.489) (-2.11)<.3418-4>
PSI/VG ;PHI/DA  -.0845 (0) (.451) (1.67)[-.0858;.838]<-.0139>
PSI/VG ;THE/DB   .170 (0) (.460)[.184;.0140]<.1582-4>
```

TABLE III-5 CONTINUED
BO-105C TRANSFER FUNCTION FACTORS

CASE 31 20KT

GUST NUMERATORS CONTINUED:

PHI/WG ;THR/DR .000754 (0) (0) (.0372) (-1.30) (3.22) <-.000117>
PHI/WG ;PSI/DP .00122 (0) (1.83) (-2.62)[-.0396;.473]<-.00105>
THR/WG ;PHI/DA -.00265 (0) (0) (.0960)[-.0780;.775]<-.000137>

THR/WG ;PSI/DP -.0156 (0) (.0769)[.0155;.833]<-.000226>
PSI/WG ;PHI/DA .00451 (0) (.333) (3.47)[-.0971;.366]<.000698>
PSI/WG ;THR/DR -.00165 (0) (.0368) (9.76)[.281;.842]<-.000116>

PHI/PG ;THR/DR -9.37 (0) (.00417) (.460)[.184;.792]<-.0113>
PHI/PG ;PSI/DP 11.9 (.0406) (.449) (3.76)[-.0886;.440]<.159>
THR/PG ;PHI/DA .763 (0) (.0816) (.463)[.287;.736]<.0156>

THR/PG ;PSI/DP 1.10 (.140) (.430) (.667)[-.521;.705]<.0220>
PSI/PG ;PHI/DA .319 (-.0211) (.486) (4.25)[-.196;.616]<-.00885>
PSI/PG ;THR/DR -.222 (.00401) (.461) (2.96)[-.831;2.89]<-.0101>

PHI/QG ;THR/DR .603 (0) (.0861) (.473)[.169;1.011<.0135>
PHI/QG ;PSI/DP -3.21 (.138)[-.656;.425][.818;.595]<-.0288>
THR/QG ;PHI/DA 9.26 (0) (.0140) (.461)[.176;.771]<.0358>

THR/QG ;PSI/DP 8.41 (.0139) (.460) (9.99)[.0338;.416]<.0535>
PSI/QG ;PHI/DA -.587 (.0442) (.436) (-1.70)[.418;1.88]<.0679>
PSI/QG ;THR/DR .117 (.0861) (.473) (8.59)[-.0357;.763]<.0128>

PHI/RG ;THR/DR .0355 (0) (.0119) (.472) (3.53) (-3.91) <-.00274>
PHI/RG ;PSI/DP .301 (.0129) (.669) (1.02)[-.300;.426]<.000479>
THR/RG ;PHI/DA -.572 (0) (.0151) (.467)[.0335;.799]<-.00257>

THR/RG ;PSI/DP -3.12 (.0151) (.467)[.0346;.435]<-.00419>
PSI/RG ;PHI/DA .606 (.0421) (.462) (3.38)[.00387;.279]<.00309>
PSI/RG ;THR/DR -.220 (.0119) (.468) (9.71)[.0310;.470]<-.002619>

YD/WG ;PHI/DA .0583 (0) (.451)[.0930;.783][.185;5.41]<.472>
YD/WG ;THR/DR -.0613 (0) (.160) (.753)[.0920;.690]<-.00313>
YD/WG ;PSI/DP .0301 (.450) (9.11)[.0328;.436][.151;5.63]<.743>

ZD/WG ;PHI/DA .558 (0) (0) (.582) (3.10)[.205;.720]<.895>
ZD/WG ;THR/DR -.198 (0) (0) (.0811) (9.70)[.150;.920]<-.132>
ZD/WG ;PSI/DP .271 (0) (.505) (3.32) (8.96)[.0328;.436]<.780>

YD/VG ;PHI/DA .115 (0) (.104) (.747) (3.68)[.142;.416]<.00309>
YD/VG ;THR/DR -.0711 (0) (.0121) (.225) (.456)[.717;5.44]<-.00261>
YD/VG ;PSI/DP .0686 (.449) (3.58)[-.0866;.439][.603;5.98]<.743>

ZD/WG ;PHI/DA -.00819 (0) (0) (-1.49) (6.09)[-.0419;.818]<.0896>
ZD/WG ;THR/DR .00390 (0) (0) (.0836) (9.89)[.0759;.961]<.00189>
ZD/WG ;PSI/DP -.00186 (0) (-2.10) (7.25) (8.60)[.0152;.433]<.0949>

ZD/VG ;PHI/DA 1.70 (0) (1.65)[-.0985;.820][.205;.784]<.472>
ZD/VG ;THR/DR -.488 (0) (.0180) (.0881) (9.68)[.117;.918]<-.00113>
ZD/VG ;PSI/DP .591 (3.90) (8.97)[-.0803;.431][.0313;.880]<.743>

YD/WG ; ZD/DC -.189 (0) (-.0307) (8.95)[-.0750;.970][.208;5.48]<1.47>
YD/VG ; ZD/DC -.679 (0) (-.0881) (3.31)[.211;.490][.671;5.70]<1.47>

PHI/WG ;THR/DR ;PSI/DP -.00447 (0) (.0100) (.291)<-.1318-4>
THR/WG ;PHI/DA ;PSI/DP -.0735 (0) (.0351) (.451)<-.00116>
PSI/WG ;PHI/DA ;THR/DR -.0318 (0) (.0364) (.448)<-.000513>

PHI/VG ;THR/DR ;PSI/DP -.0725 (0) (.00770) (.460)<-.000256>
THR/VG ;PHI/DA ;PSI/DP .00258 (0) (.0181) (.490)<.2218-4>
PSI/VG ;PHI/DA ;THR/DR .0447 (0) (.00797) (.461)<.000168>

PHI/AG ;THR/DR ;PSI/DP -.000402 (0) (.00768) (-1.72)<.1158-4>
THR/WG ;PHI/DA ;PSI/DP -.00422 (0) (.0312) (.0933)<-.1238-4>
PSI/WG ;PHI/DA ;THR/DR -.00443 (0) (.0109) (.272)<-.1328-4>

TABLE III-5 CONTINUED
BO-105C TRANSFER FUNCTION FACTORS

CASE 31 20KT

GUST NUMERATORS CONCLUDED:

```
PHI/DG ;THE/DB ;PSI/DP   -12.2  (.00768) (.0805) (.460) <-.00175>
THE/DG ;PHI/DA ;PSI/DP    .928  (.0342) (.0853) (.463) <.00125>
PSI/DG ;PHI/DA ;THE/DB   -.348  (.0204) (-.188) (.458) <.000603>

PHI/DG ;THE/DB ;PSI/DP    .871  (.00777) (.108) (.472) <.000345>
THE/DG ;PHI/DA ;PSI/DP   12.0   (.0138) (.0349) (.451) <.00267>
PSI/DG ;PHI/DA ;THE/DB    .296  (.474)[.178;.0549]<.000423>

PHI/DG ;THE/DB ;PSI/DP   -.137  (.00841) (.0132) (.503) <-.761E-5>
THE/DG ;PHI/DA ;PSI/DP   -.888  (.0151) (.0352) (.467) <-.000218>
PSI/DG ;PHI/DA ;THE/DB   -.588  (.0119) (.0389) (.466) <-.000127>

 YD/UG ;PHI/DA ;THE/DB   -.0159 (0) (.607)[.266;.767]<-.00567>
 YD/UG ;PHI/DA ;PSI/DP    .0789 (.0351) (.451)[.172;5.87]<.0174>
 YD/UG ;THE/DB ;PSI/DP   -.00753 (.614) (9.01)[.0819;.885]<-.00825>

 ZD/UG ;PHI/DA ;THE/DB   -.529  (0) (0)[.238;.786]<-.327>
 ZD/UG ;PHI/DA ;PSI/DP    .709  (0) (.0353) (.507) (3.10) <.0393>
 ZD/UG ;THE/DB ;PSI/DP   -.253  (0) (9.80)[.0326;.836]<-.471>

 YD/VG ;PHI/DA ;THE/DB   -.136  (0) (.0122) (.186) (.411) <-.000127>
 YD/VG ;PHI/DA ;PSI/DP    .119  (.437) (3.67)[-.0478;.483]<.0174>
 YD/VG ;THE/DB ;PSI/DP   -.0675 (.00770) (.460)[.635;5.88]<-.00825>

 XD/VG ;PHI/DA ;THE/DB    .0103 (0) (0)[.163;.763]<.00603>
 XD/VG ;PHI/DA ;PSI/DP   -.00998 (0) (.0483) (-2.10) (6.49) <.00657>
 XD/VG ;THE/DB ;PSI/DP    .00499 (0) (9.96)[.000840;.836]<.00845>

 ZD/VG ;PHI/DA ;THE/DB   -1.20  (0) (.00799)[.185;.770]<-.00567>
 ZD/VG ;PHI/DA ;PSI/DP    1.58  (.0352) (3.67)[-.0438;.838]<.0174>
 ZD/VG ;THE/DB ;PSI/DP   -.575  (.00767) (9.81)[.0322;.837]<-.00825>

 XD/UG ; ZD/DC ;PHI/DA   -.890  (0)[-.0606;.776][.196;5.37]<-8.50>
 XD/UG ; ZD/DC ;THE/DB    .569  (0) (.723)[-.257;.804]<.0672>
 XD/UG ; ZD/DC ;PSI/DP   -.267  (9.14)[.0341;.837][.135;5.65]<-18.8>

 YD/VG ; ZD/DC ;PHI/DA   -1.25  (0) (-.103) (3.63)[.207;.898]<.116>
 YD/VG ; ZD/DC ;THE/DB    .657  (0) (.0171) (.138)[.716;5.88]<.0848>
 YD/VG ; ZD/DC ;PSI/DP   -.686  (3.52)[-.0359;.829][.602;5.95]<-18.8>

 YD/UG ;PHI/DA ;THE/DB ;PSI/DP   -.0198 (.0350) (.599) <-.000416>
 ZD/UG ;PHI/DA ;THE/DB ;PSI/DP   -.678  (0) (.0350) <-.0237>
 YD/VG ;PHI/DA ;THE/DB ;PSI/DP   -.120  (.00770) (.451) <-.000416>

 XD/VG ;PHI/DA ;THE/DB ;PSI/DP    .0135 (0) (.0371) <.000899>
 ZD/VG ;PHI/DA ;THE/DB ;PSI/DP   -1.58  (.00767) (.0351) <-.000416>
 XD/UG ; ZD/DC ;PHI/DA ;THE/DB    .142  (0)[.310;.757]<.0816>

 YD/VG ; ZD/DC ;PHI/DA ;THE/DB    1.25  (0) (.0253) (.0753) <.00238>
 YD/VG ; ZD/DC ;PHI/DA ;PSI/DP   -1.12  (3.68)[-.0408;.833]<-.764>
 XD/VG ; ZD/DC ;PHI/DA ;THE/DB   -.108  (0)[-.125;.788]<-.0600>

 XD/UG ; ZD/DC ;PHI/DA ;THE/DB ;PSI/DP    .174  (.0353) <.00613>
 YD/VG ; ZD/DC ;PHI/DA ;THE/DB ;PSI/DP    1.12  (.00586) <.00613>
 XD/VG ; ZD/DC ;PHI/DA ;THE/DB ;PSI/DP   -.158  (.0369) <-.00567>
```

MICROFILMED FROM
BEST AVAILABLE COPY

TABLE III-5 CONTINUED
BO-105C TRANSFER FUNCTION FACTORS

CASE 32 40KT

DENOMINATOR: (0) (.0363) (.506) (4.13) (9.13) [-.125; .478][.152; 1.34]<.281>

CONTROL NUMERATORS:

PHI/DA 2.61 (0) (.516) (3.90) [-.128; .472][.168; 1.30]<1.98>
THE/DB -.971 (0) (.0167) (.0383) (.645) (9.97) [.139; 1.32]<-.00694>
PSI/DP 1.34 (.518) (4.17) (9.01) [.0319; .413][-.108; .477]<1.01>

PHI/DB .484 (0) (.296) (-.793) [-.602; 1.28][.624; 1.48]<-.409>
THE/DA .179 (0) (.0301) (-.460) (.683) (-3.45) [.244; 1.26]<.00933>

PHI/DA ;THE/DB -2.62 (0) (.0126) (.648) [.159; 1.28]<-.0353>
PHI/DA ;PSI/DP 3.53 (.0348) (.519) (3.92) [-.115; .476]<.0566>
THE/DB ;PSI/DP -1.30 (.0130) (.646) (9.91) [.0374; .414]<-.0186>

PHI/DB ;PSI/DP .687 (.123) (.171) (-1.18) [.366; .598]<-.00608>
PHI/DP ;THE/DB .863 (0) (.0130) (.646) (-2.22) (2.42) <-.0390>
PHI/DC ;THE/DB .0667 (0) (.0143) (.899) (4.46) (-4.81) <-.0183>

THE/DA ;PSI/DP .236 (-.169) (.702) (-4.35) [.723; .162]<.00323>
THE/DP ;PHI/DA .446 (0) (-.0914) (.124) (.618) (2.00) <-.00626>
THE/DC ;PHI/DA .738 (0) (-.0264) (.241) [.310; 1.26]<-.00745>

PSI/DA ;THE/DB -.648 (.0126) (.653) [.0300; 1.77]<-.0167>
PSI/DB ;PHI/DA .0936 (.0212) (.315) (-.476) [.282; 4.20]<-.00525>
XD/DB ;PHI/DA 2.04 (0) (.671) [.159; 1.28][.0664; 6.34]<90.8>

YD/DA ;THE/DB -84.5 (.0126) (.647) [.149; 1.28]<-1.13>
ZD/DB ;PHI/DA 2.78 (0) (-.0770) [.167; 1.28][.298; 6.46]<-14.7>
XD/DC ;PHI/DA -.338 (0) (.190) [.309; 1.27][-.00839; 8.47]<-7.38>

YD/DP ;THE/DB 1.51 (.0130) (.646) (-1.93) (5.88) [.773; 2.95]<-1.26>
ZD/DC ;PHI/DA -26.5 (0) (3.57) [.0566; .401][.157; 1.34]<-27.4>

PHI/DA ;THE/DB ;PSI/DP -3.56 (.0127) (.0350) (.647) <-.00103>
PHI/DC ;THE/DB ;PSI/DP -.211 (.0113) (-.0434) (.995) <.000103>
THE/DC ;PHI/DA ;PSI/DP .845 (-.0168) (.0314) (.256) <-.000114>

PSI/DC ;PHI/DA ;THE/DB -.916 (.0129) (.0562) (.965) <-.000575>
XD/DB ;PHI/DA ;PSI/DP 2.77 (.0348) (.669) [.0663; 6.34]<2.59>
YD/DA ;THE/DB ;PSI/DP -114. (.0129) (.646) <-.954>

ZD/DC ;PHI/DA ;THE/DB 25.8 (0) (.0104) [.143; 1.27]<.433>
ZD/DC ;PHI/DA ;PSI/DP -35.9 (.0355) (3.61) [.0706; .425]<-.835>
XD/DC ;PHI/DA ;THE/DB -.237 (0) (-1.14) [.293; 1.33]<.472>

XD/DC ;PHI/DA ;PSI/DP -.144 (.0353) (.211) [-.0330; 9.00]<-.207>
YD/DP ;PHI/DA ;THE/DB 3.41 (.0128) (.642) (1.57) (-1.58) <-.0692>
ZD/DB ;PHI/DA ;PSI/DP 3.74 (.0351) (-.0747) [.296; 6.48]<-.412>

ZD/DC ;PHI/DA ;THE/DB ;PSI/DP 15.8 (.0115) (.0352) <.0143>
XD/DC ;PHI/DA ;THE/DB ;PSI/DP -.316 (.0297) (-.959) <.00898>

TABLE III-5 CONTINUED
BO-105C TRANSFER FUNCTION FACTORS

CASE 33 60KT

DENOMINATOR: (0) (.0478) (.511) (4.54) (8.93)[-.195;.456][.208;1.69]<.588>
S SP R P D

CONTROL NUMERATORS:

PHI/DA 2.62 (0) (.525) (4.22)[-.192;.449][.230;1.65]<3.17>
THE/DB -.994 (0) (.0255) (.0505) (.758) (9.86)[.202;1.67]<-.0265>
PSI/DP 1.47 (.525) (4.62) (8.84)[.0330;.407][-.170;.456]<1.09>

PHI/DB .487 (0) (.313) (-.556)[-.559;1.57][.547;2.04]<-.868>
PHI/DP -1.07 (0) (.530) (-2.46)[-.179;.451][.997;3.48]<3.42>
PHI/DC -.303 (0) (.547) (-3.71)[-.232;.530][.652;3.09]<1.65>

THE/DA .174 (0) (.0384) (-.241) (.811) (-4.71)[.281;1.57]<.0153>
THE/DP 2.19 (0) (.0376) (.774) (2.46)[-.994;.295]<.0136>
THE/DC .527 (0) (.0324) (.0803) (.394) (9.90)[.280;1.58]<.0134>

PSI/DA .375 (.537) (2.46)[-.205;.454][-.110;3.12]<.995>
PSI/DB .0738 (.323) (-.428) (9.56)[.106;.460][-.0147;3.64]<-.274>
PSI/DC .287 (.548) (5.93) (8.59)[.0598;.458][-.276;.561]<.524>

XD/DB .722 (0) (.0551) (.850) (9.26)[.201;1.66][.0452;6.52]<36.6>
YD/DA 85.4 (.519) (4.21)[-.195;.448][.213;1.64]<101.>
ZD/DC -11.4 (0) (.0369) (3.45) (8.96)[.539;.422][.219;1.78]<-7.38>

XD/DC -17.4 (0) (.117) (.359) (9.58)[.287;1.58]<-17.4>
YD/DP -1.73 (.524) (-2.31)[-.179;.449][.813;3.24][.911;4.99]<110.>
ZD/DB 1.79 (0) (.00387) (.0585) (9.14)[.208;1.66][.260;6.81]<.474>

PHI/DA ;THE/DB -2.69 (0) (.0221) (.762)[.227;1.63]<-.120>
PHI/DA ;PSI/DP 3.88 (.0463) (.528) (4.26)[-.182;.452]<.0822>
THE/DB ;PSI/DP -1.47 (.0227) (.759) (9.89)[.0450;.412]<-.0426>

PHI/DB ;PSI/DP .796 (.134) (.166) (-.983)[.136;.905]<-.0143>
PHI/DP ;THE/DB 1.00 (0) (.0227) (.760) (-2.51) (3.08)<-.134>
PHI/DC ;THE/DB .0446 (0) (.0230) (1.12) (6.37) (-7.44)<-.0548>

THE/DA ;PSI/DP .254 (.117) (.179) (-.233) (.826) (-5.11)<.00523>
THE/DP ;PHI/DA .494 (0) (.0923) (-.226) (.722) (2.07)<-.0154>
THE/DC ;PHI/DA 1.43 (0) (.0175) (.469)[.280;1.58]<.0292>

PSI/DA ;THE/DB -.0358 (.0221) (.770) (6.73)[-.127;3.03]<-.0376>
PSI/DB ;PHI/DA .182 (.0251) (-.351) (.355)[-.00489;3.68]<-.00766>
PSI/DC ;THE/DB -.324 (.0230) (1.05) (9.86)[.0460;.476]<-.0174>

PSI/DC ;PHI/DA .756 (.0625) (.543) (5.27)[-.272,.535]<.0387>
XD/DB ;PHI/DA 1.93 (0) (.847)[.226;1.63][.0578;6.36]<175.>
XD/DB ;PSI/DP 1.07 (.844) (9.23)[.0461;.412][.0442;6.54]<60.5>

YD/DA ;THE/DB -86.6 (.0221) (.760)[.211;1.62]<-3.81>
YD/DA ;PSI/DP 125. (.524) (4.28)[-.183;.450]<57.0>
ZD/DC ;PHI/DA -29.8 (0) (3.15)[.709;.397][.231;1.71]<-43.4>

ZD/DC ;THE/DB 10.4 (0) (.0278) (.0410) (9.85)[.184;1.66]<.322>
ZD/DC ;PSI/DP -16.9 (3.54) (8.88)[.733;.411][.0391;.421]<-15.8>
XD/DC ;PHI/DA -45.3 (0) (.457)[.276;1.58]<-51.7>

XD/DC ;THE/DB -.420 (0) (-.0183) (-.269) (9.92)[.322;1.56]<-.0501>
XD/DC ;PSI/DP 2.45 (.465) (9.38) (-9.80)[.0168;.419]<-14.4>
YD/DP ;PHI/DA -3.70 (.542) (-2.15) (2.21) (4.23)[-.167;.454]<8.32>

YD/DP ;THE/DB 1.70 (.0227) (.759) (-2.38) (6.02)[.742;1.20]<-4.32>
ZD/DB ;PHI/DA 4.55 (0) (.00813)[.233;1.63][.282;6.75]<4.47>
ZD/DB ;PSI/DP 2.62 (.0106) (9.10)[.0442;.412][.256;6.86]<2.02>

PHI/DA ;THE/DB ;PSI/DP -4.01 (.0222) (.0465) (.761)<-.00315>
PHI/DC ;THE/DB ;PSI/DP -.261 (-.0160) (.0221) (1.36)<.000125>
THE/DC ;PHI/DA ;PSI/DP 1.98 (.0220) (.0450) (.483)<.000946>

TABLE III-5 CONTINUED
BO-105C TRANSFER FUNCTION FACTORS

CASE 33 60KT

CONTROL NUMERATORS CONCLUDED:

PSI/DC ;PHI/DA ;THE/DB -.876 (.0222) (.0696) (1.03)<-.00139>

YD/DB ;PHI/DA ;PSI/DP 2.89 (.0462) (.843)[.0579;6.36]<4.55>
YD/DA ;THE/DP ;PSI/DP -129. (.0225) (.759)<-2.21>
ZD/DC ;PHI/DA ;THE/DB 28.1 (0) (.0219)[.211;1.61]<1.68>

ZD/DC ;THE/DP ;PSI/DP 15.5 (.0227) (9.93)[.0445;.414]<.557>
ZD/DC ;PHI/DA ;PSI/DP -44.3 (.0470) (3.21)[.746;.423]<-1.19>
XD/DC ;PHI/DA ;THE/DB -1.14 (0) (-.120)[.255;1.59]<.345>

XD/DC ;PHI/DA ;PSI/DP 6.42 (.0468) (.473) (-9.75)<-1.39>
XD/DC ;THE/DB ;PSI/DP -.628 (-.0195) (9.51)[-.0510;.425]<.0210>
YD/DP ;PHI/DA ;THE/DB 3.79 (.0223) (.757) (2.20) (-2.26)<-.319>

ZD/DB ;PHI/DA ;PSI/DP 6.70 (.00888) (.0472)[.281;6.80]<.130>

ZD/DC ;PHI/DA ;THE/DB ;PSI/DP 42.5 (.0222) (.0471)<.0443>
XD/DC ;PHI/DA ;THE/DB ;PSI/DP -1.70 (-.0214) (.0242)<.000881>

GUST NUMERATORS:

PHI/UG .0101 (0) (0) (0)[.803;1.36]X[-.228;2.79]<.145>
THE/UG -.0178 (0) (0) (.0478) (.736) (9.95)[.182;1.71]<-.0183>
PSI/UG .00628 (0) (0) (9.20)[.149;.470]X[.912;1.92]<.0471>

PHI/VG .0689 (0) (0) (4.10)[-.130;.432]X[.962;.588]<.0183>
THE/VG -.0640 (0) (0) (-.00230) (.0400)[.973;.994]<.581E-5>
PSI/VG .0248 (0) (0) (.519) (4.82) (8.59)[-.199;.460]<-.113>

PHI/WG .00780 (0) (0) (2.08)[-.00786;.327]X[-.229;3.80]<.0250>
THE/WG -.124 (0) (0)[.985;.0519]X[.148;1.79]<-.00108>
PSI/WG .0106 (0) (3.56) (9.07)[.0147;.343]X[.186;.453]<.00824>

PHI/PG 9.35 (0) (.517) (4.31)[-.205;.455]X[.237;1.64]<11.6>
THE/PG .946 (0) (.0396) (.875)[.550;1.09]X[-.175;1.44]<.0806>
PSI/PG .387 (.521) (2.71)[-.197;.459]X[-.242;5.61]<3.63>

PHI/QG -2.40 (0) (.260) (-.330)[-.280;1.62]X[.642;2.00]<2.14>
THE/QG 36.1 (0) (.0281) (.0497) (.784)[.201;1.67]<.110>
PSI/QG -.315 (.273) (-.330) (9.62)[.149;.454]X[.0847;3.48]<.682>

PHI/RG 5.72 (0) (.586) (3.12)[-.140;.421]<1.85>
THE/RG -.142 (0) (-.00225) (.0399) (.856) (9.82)[-.0378;2.36]<.000597>
PSI/RG .675 (.574) (4.34) (8.95)[-.138;.402]X[.0465;.491]<.588>

XD/UG .0341 (0) (.0476) (.875) (9.15)[.162;1.71]X[.143;1.94]<.588>
ZD/UG .0644 (0) (0) (.0476) (9.09)[.177;1.69]X[.408;4.83]<1.85>
YD/VG .0920 (0) (3.43)[-.130;.426]X[.982;.616]X[.765;5.19]<.588>

XD/WG -.0232 (0) (0) (.0368) (-2.40)[.163;1.79]X[.991;8.48]<.471>
ZD/WG .787 (0) (.0477) (4.11) (8.94)[-.0179;.393]X[.205;1.66]<.588>

PHI/UG ;THE/DB -.00141 (0) (0) (.709)[.120;5.20]<-.0270>
PHI/UG ;PSI/DP .0216 (0) (-.00228) (-.201)[.638;1.04]<.108E-4>
THE/UG ;PHI/DA -.0483 (0) (0) (.740)[.211;1.66]<-.0985>

THE/UG ;PSI/DP -.271 (0) (.738)[.0468;.410]<-.0338>
PSI/UG ;PHI/DA .0142 (0) (-.00123) (.141)[.928;1.87]<-.984E-5>
PSI/UG ;THE/DB -.00493 (0) (.709) (9.84)[.0151;.498]<-.00852>

PHI/VG ;THE/DB -.0688 (0) (0) (.0231)[.995;.716]<-.000615>
PHI/VG ;PSI/DP .0750 (0) (.527) (4.21)[-.182;.451]<.0338>
THE/VG ;PHI/DA -.0107 (0) (0) (.0309)[.997;1.16]<-.000444>

THE/VG ;PSI/DP .00168 (0) (-.00502) (.0849) (.697) (-9.85)<.108E-4>
PSI/VG ;PHI/DA -.0665 (0) (.528) (4.28)[-.185;.453]<-.0309>
PSI/VG ;THE/DB .0247 (0) (0) (.0201) (.764) (9.99)<.00377>

TABLE III-5 CONTINUED
BO-105C TRANSFER FUNCTION FACTORS

CASE 33 60KT

GUST NUMERATORS CONTINUED:

PHI/WG ;THE/DB -.00172 (0) (0) (.0388)[-.00835;6.38]<-.00271>
PHI/WG ;PSI/DP .0228 (0) (-.320) (1.68)[.00489;.359]<-.00157>
THE/WG ;PHI/DA -.0338 (0) (0) (.0653)[.182;1.71]<-.00644>

THE/WG ;PSI/DP -.208 (0) (.0646)[.0400;.408]<-.00218>
PSI/WG ;PHI/DA .0275 (0) (.204) (3.42)[-.0535;.328]<.00206>
PSI/WG ;THE/DB -.00960 (0) (.0387) (9.84)[.132;.483]<.000872>

PHI/PG ;THE/DB -9.76 (0) (.0208) (.761)[.230;1.61]<-.40>
PHI/PG ;PSI/DP 11.8 (.0493) (.524) (4.35)[-.182;.854]<.319>
THE/PG ;PHI/DA .842 (0) (.0738) (.786)[.212;1.65]<.133>

THE/PG ;PSI/DP 1.39 (.0808) (.626) (1.07)[-.479;.929]<.0648>
PSI/PG ;PHI/DA -.230 (.333)[-.281;.208][.778;2.27]<-.0170>
PSI/PG ;THE/DB -.0643 (.0208) (.766) (5.26)[-.374;4.84]<-.126>

PHI/QG ;THE/DB .630 (0) (.0334) (.983)[.183;1.78]<.0654>
PHI/QG ;PSI/DP -3.87 (-.327)[.807;.0618][.508;1.08]<.00568>
THE/QG ;PHI/DA 9.84 (0) (.0261) (.786)[.226;1.63]<.535>

THE/QG ;PSI/DP 53.7 (.0264) (.783)[.0469;.410]<.187>
PSI/QG ;PHI/DA -.768 (.0483) (-.331) (.332)[.101;3.52]<.0463>
PSI/QG ;THE/DB .0472 (.0334) (1.46) (9.16)[.0578;.985]<.0204>

PHI/RG ;THE/DB -.486 (0) (.0231) (.793) (9.26)<-.0825>
PHI/RG ;PSI/DP .752 (.0336) (.640) (3.02)[-.193;.409]<.00817>
THE/RG ;PHI/DA -.374 (0) (.0310) (.865)[.0338;2.12]<-.0450>

THE/RG ;PSI/DP -3.42 (.0265) (.881)[.0524;.397]<-.0125>
PSI/RG ;PHI/DA 1.77 (.0502) (.569) (4.07)[-.123;.424]<.0370>
PSI/RG ;THE/DB -.661 (.0231) (.787) (9.86)[.0360;.470]<-.0262>

ID/UG ;PHI/DA .0901 (0) (.872)[.202;1.66][.340;3.84]<3.17>
ID/UG ;THE/DB -.0211 (0) (.0617) (.813) (9.77)[.209;1.60]<-.0265>
ID/UG ;PSI/DP .0509 (.871) (9.14)[.0481;.409][.316;4.00]<1.09>

ZD/UG ;PHI/DA .166 (0) (0)[.210;1.64][.420;4.74]<9.97>
ZD/UG ;THE/DB -.0322 (0) (0) (.0784) (9.71)[.285;1.67]<-.0686>
ZD/UG ;PSI/DP .0941 (0) (9.06)[.0463;.410][.376;4.89]<3.42>

YD/VG ;PHI/DA .187 (0) (4.22)[-.0200;.429][.852;.505]<.0370>
YD/VG ;THE/DB -.0915 (0) (.0231)[.987;.749][.816;4.70]<-.0262>
YD/VG ;PSI/DP .0925 (.524) (3.84)[-.183;.449][.711;5.38]<1.09>

ID/WG ;PHI/DA -.0600 (0) (0) (-2.42) (7.52)[.202;1.70]<3.17>
ID/WG ;THE/DB .0320 (0) (0) (.0474) (9.94)[.186;1.74]<.0457>
ID/WG ;PSI/DP -.0330 (0) (-2.63)[.0400;.405][.983;8.71]<1.09>

ZD/WG ;PHI/DA 2.06 (0) (3.83)[-.0224;.390][.231;1.63]<3.17>
ZD/WG ;THE/DB -.761 (0) (.0254) (.0504) (9.85)[.208;1.66]<-.0265>
ZD/WG ;PSI/DP 1.16 (4.15) (8.87)[-.0135;.385][.0444;.415]<1.09>

ID/UG ; ZD/DC -.392 (0) (.0446) (9.14)[.155;1.65][.356;4.11]<-7.38>
YD/VG ; ZD/DC -1.04 (0) (.133) (2.57)[.650;.871][.749;5.23]<-7.38>

PHI/UG ;THE/DB ;PSI/DP -.00706 (0) (.0913) (.688)<-.000444>
THE/UG ;PHI/DA ;PSI/DP -.0746 (0) (.0463) (.740)<-.00255>
PSI/UG ;PHI/DA ;THE/DB -.0133 (0) (.0252) (.713)<-.000234>

PHI/VG ;THE/DB ;PSI/DP -.0770 (0) (.0227) (.757)<-.00132>
THE/VG ;PHI/DA ;PSI/DP -.00327 (0) (.109) (.454)<-.000162>
PSI/VG ;PHI/DA ;THE/DB .0691 (0) (.0221) (.766)<.00117>

PHI/WG ;THE/DB ;PSI/DP -.0122 (0) (.0166) (-.163)<.331E-4>
THE/WG ;PHI/DA ;PSI/DP -.0552 (0) (.0423) (.0673)<-.000157>
PSI/WG ;PHI/DA ;THE/DB -.0259 (0) (.0225) (.161)<-.936E-4>

TABLE III-5 CONTINUED
BO-105C TRANSFER FUNCTION FACTORS

CASE 33 60KT

GUST NUMERATORS CONCLUDED:

PHI/PG ;THE/DB ;PSI/DP -14.5 (.0212) (.0498) (.760)<-.0116>
THE/PG ;PHI/DA ;PSI/DP 1.29 (.0445) (.0746) (.784)<.00336>
PSI/PG ;PHI/DA ;THE/DB .177 (.0228) (.278) (.859)<.000965>

PHI/QG ;THE/DB ;PSI/DP .981 (.0268) (.0972) (.874)<.00223>
THE/QG ;PHI/DA ;PSI/DP 14.7 (.0264) (.0463) (.784)<.0141>
PSI/QG ;PHI/DA ;THE/DB .105 (.0212) (-.112) (1.85)<-.000460>

PHI/RG ;THE/DB ;PSI/DP -.597 (.0248) (.0402) (.815)<-.000484>
THE/RG ;PHI/DA ;PSI/DP -.889 (.0269) (.0468) (.883)<-.000987>
PSI/RG ;PHI/DA ;THE/DB -1.79 (.0222) (.0484) (.786)<-.00151>

XD/UG ;PHI/DA ;THE/DB -.0569 (0) (.813)[.227;1.61]<-.120>
XD/UG ;PHI/DA ;PSI/DP .136 (.0463) (.870)[.328;3.88]<.0822>
XD/UG ;THE/DB ;PSI/DP -.0313 (.808) (9.64)[.0446;.418]<-.0426>

ZD/UG ;PHI/DA ;THE/DB -.0863 (0) (0)[.306;1.66]<-.239>
ZD/UG ;PHI/DA ;PSI/DP .242 (0) (.0463)[.397;4.80]<.259>
ZD/UG ;THE/DB ;PSI/DP -.0462 (0) (9.49)[.0482;.404]<-.0714>

YD/VG ;PHI/DA ;THE/DB -.192 (0) (.0226)[.998;.590]<-.00151>
YD/VG ;PHI/DA ;PSI/DP .183 (.525) (4.25)[-.176;.449]<.0822>
YD/VG ;THE/DB ;PSI/DP -.0934 (.0227) (.759)[.748;5.14]<-.0426>

XD/WG ;PHI/DA ;THE/DB .0865 (0) (0)[.224;1.65]<.236>
XD/WG ;PHI/DA ;PSI/DP -.0851 (0) (.0449) (-2.65) (7.88)<.0797>
XD/WG ;THE/DB ;PSI/DP .480 (0)[.0364;.405]<.0786>

ZD/WG ;PHI/DA ;THE/DB -2.05 (0) (.0221)[.233;1.63]<-.120>
ZD/WG ;PHI/DA ;PSI/DP 3.04 (.0463) (3.85)[-.0171;.389]<.0822>
ZD/WG ;THE/DB ;PSI/DP -1.12 (.0227) (9.85)[.0443;.412]<-.0426>

XD/UG ; ZD/DC ;PHI/DA -1.03 (0)[.189;1.62][.358;4.00]<-43.8>
XD/UG ; ZD/DC ;THE/DB .235 (0) (.0563) (9.76)[.201;1.58]<.322>
XD/UG ; ZD/DC ;PSI/DP -.588 (9.14)[.0470;.414][.332;4.14]<-15.8>

YD/VG ; ZD/DC ;PHI/DA -2.11 (0) (.111) (3.16)[.630;.784]<-.856>
YD/VG ; ZD/DC ;THE/DB .948 (0) (.0232) (.641)[.818;4.75]<.319>
YD/VG ; ZD/DC ;PSI/DP -1.05 (2.89)[.745;.424][.701;5.39]<-15.8>

XD/UG ;PHI/DA ;THE/DB ;PSI/DP -.0851 (.0458) (.808)<-.00315>
ZD/UG ;PHI/DA ;THE/DB ;PSI/DP -.122 (0) (.0483)<-.00588>
YD/VG ;PHI/DA ;THE/DB ;PSI/DP -.189 (.0223) (.746)<-.00315>

XD/WG ;PHI/DA ;THE/DB ;PSI/DP .129 (0) (.0436)<.00563>
ZD/WG ;PHI/DA ;THE/DB ;PSI/DP -3.06 (.0221) (.0466)<-.00315>
XD/UG ; ZD/DC ;PHI/DA ;THE/DB .632 (0)[.218;1.59]<1.60>

YD/VG ; ZD/DC ;PHI/DA ;THE/DB 2.00 (0) (.0228) (.387)<.0176>
YD/VG ; ZD/DC ;PHI/DA ;PSI/DP -2.08 (3.21)[.745;.424]<-1.19>
XD/WG ; ZD/DC ;PHI/DA ;THE/DB -.0360 (0)[-.126;3.10]<-.345>

YD/UG ; ZD/DC ;PHI/DA ;THE/DB ;PSI/DP .952 (.0465)<.0443>
YD/VG ; ZD/DC ;PHI/DA ;THE/DB ;PSI/DP 1.99 (.0223)<.0443>
XD/WG ; ZD/DC ;PHI/DA ;THE/DB ;PSI/DP -.0735 (.0120)<-.000881>

MICROFILMED FROM
BEST AVAILABLE COPY

TABLE III-5 CONTINUED
BO-105C TRANSFER FUNCTION FACTORS

CASE 34 80KT

DENOMINATOR: (0) (.0356) (.465) (4.91) (8.70) [-.318;.459][.131;2.03]<.616>

CONTROL NUMERATORS:

PHI/DA 2.62 (0) (.474) (4.49) [-.313;.458][.156;1.99]<4.53>
THE/DB -1.04 (0) (.825) (9.70) [.996;.0354][.134;2.01]<-.0419>
PSI/DP 1.60 (.472) (5.02) (8.60) [.0245;.421][-.295;.459]<1.22>

PHI/DB .481 (0) (.321) (-.536) [-.620;1.46][.375;2.47]<-1.09>
THE/DA .163 (0) (.0382) (-.144) (.902) (-6.17) [.197;1.91]<.0182>

PHI/DA ;THE/DB -2.79 (0) (.0307) (.829) [.158;1.97]<-.276>
PHI/DA ;PSI/DP 4.21 (.0598) (.474) (4.54) [-.308;.456]<.113>
THE/DB ;PSI/DP -1.67 (.0311) (.826) (9.76) [.0378;.426]<-.0757>

PHI/DB ;PSI/DP .885 (-1.22) [.918;.171][.0490;.934]<-.0273>
PHI/DP ;THE/DB 1.17 (0) (.0311) (.827) (-2.80) (3.74)<-.316>
PHI/DC ;THE/DB .0432 (0) (.0308) (1.13) (-8.79) (9.10)<-.114>

THE/DA ;PSI/DP .258 (.102) (.203) (-.221) (.921) (-.449)<.00706>
THE/DP ;PHI/DA .560 (0) (.0919) (-.320) (.754) (2.23)<-.0280>
THE/DC ;PHI/DA 2.10 (0) (.0300) (.568) [.190;.923]<.131>

PSI/DA ;THE/DB -.0394 (.0307) (.837) (5.21) [-.396;3.52]<-.0652>
PSI/DB ;PHI/DA .243 (-.00140) (-.180) (.406) [-.299;3.10]<.000240>
XD/DB ;PHI/DA 1.76 (0) (1.04) [.157;1.97][.0330;6.36]<289.>

YD/DA ;THE/DB -90.8 (.0307) (.827) [.138;1.96]<-8.80>
ZD/DB ;PHI/DA 6.54 (0) (.0306) [.161;1.98][.283;6.89]<49.1>
XD/DC ;PHI/DA 9.24 (0) (.599) (-6.70) [.182;1.92]<-137.>

YD/DP ;THE/DB 1.91 (.0311) (.826) (-2.91) (6.04) [.741;3.44]<-10.2>
ZD/DC ;PHI/DA -33.1 (0) (.161) [.930;1.89][.177;2.08]<-81.9>

PHI/DA ;THE/DB ;PSI/DP -4.53 (.0304) (.0601) (.828)<-.00686>
PHI/DC ;THE/DB ;PSI/DP -.323 (0) (.0325) (1.43)<-.0150>
THE/DC ;PHI/DA ;PSI/DP 3.22 (.0319) (.0595) (.574)<.00352>

PSI/DC ;PHI/DA ;THE/DB -.935 (.0306) (.0846) (1.02)<-.00247>
XD/DB ;PHI/DA ;PSI/DP 2.87 (.0596) (1.04) [.0338;6.36]<7.18>
YD/DA ;THE/DB ;PSI/DP -147. (.0309) (.826)<-3.74>

ZD/DC ;PHI/DA ;THE/DB 30.0 (0) (.0307) [.182;1.97]<3.56>
ZD/DC ;PHI/DA ;PSI/DP -53.4 (.0603) (.162) [.923;2.02]<-2.12>
XD/DC ;PHI/DA ;THE/DB -2.05 (0) (.00731) [.163;1.93]<-.0556>

XD/DC ;PHI/DA ;PSI/DP 15.5 (.0600) (.606) (-6.13)<-3.47>
YD/DP ;PHI/DA ;THE/DB 4.19 (.0307) (.823) (2.91) (-3.01)<-.927>
ZD/DB ;PHI/DA ;PSI/DP 10.4 (.0392) (.0617) [.285;6.96]<1.22>

ZD/DC ;PHI/DA ;THE/DB ;PSI/DP 49.5 (.0303) (.0607)<.0910>
XD/DC ;PHI/DA ;THE/DB ;PSI/DP -3.34 [.876;.0622]<-.0129>

TABLE III-5 CONTINUED
BO-105C TRANSFER FUNCTION FACTORS

CASE 35 100KT

DENOMINATOR: (0) (.0402) (.423) (5.87) (8.45)[-.569;.535][.138;2.26]<1.15>

CONTROL NUMERATORS:

PHI/DA 2.65 (0) (.422) (4.90)[-.566;.529][.173;2.23]<7.62>
THE/DB -1.39 (0) (.0335) (.0832) (.864) (9.59)[.140;2.25]<-.0736>
PSI/DP 1.67 (.419) (5.58) (8.30)[-.00479;.452][-.552;.532]<1.87>

PHI/DB .472 (0) (.448) (-.785)[-.532;1.83][.269;2.49]<-2.10>
THE/DA .146 (0) (.0287) (-.0829) (.964) (-9.38)[.218;2.17]<.0149>

PHI/DA ;THE/DB -2.96 (0) (.0365) (.867)[.174;2.22]<-.462>
PHI/DA ;PSI/DP 4.43 (.0747) (.421) (4.98)[-.563;.531]<.194>
THE/DB ;PSI/DP -1.84 (.0372) (.864) (9.61)[.00454;.453]<-.116>

PHI/DB ;PSI/DP .927 (-1.60)[.690;.183][.232;.871]<-.0375>
PHI/DP ;THE/DB 1.34 (0) (.0372) (.865) (-3.14) (4.49)<-.607>
PHI/DC ;THE/DB .716 (0) (.0371) (.995) (-8.14)<-.215>

THE/DA ;PSI/DP .243 (.120) (.196) (-.214) (1.01) (-9.53)<.0117>
THE/DP ;PHI/DA .673 (0) (.106) (-.458) (.691) (2.67)<-.0603>
THE/DC ;PHI/DA 2.81 (0) (.0348) (.587)[.204;2.14]<.263>

PSI/DA ;THE/DB -.0211 (.0365) (.870) (6.79)[-.818;4.38]<-.0871>
PSI/DB ;PHI/DA .284 (.0329) (-.300) (.659)[-.0297;2.60]<-.0125>
XD/DB ;PHI/DA 1.55 (0) (1.45)[.174;2.22][-.00977;6.03]<403.>

YD/DA ;THE/DB -98.4 (.0365) (.864)[.151;2.18]<-14.7>
ZD/DB ;PHI/DA 8.74 (0) (.0585)[.175;2.22][.280;7.00]<123.>
XD/DC ;PHI/DA 15.3 (0) (.691) (-4.71)[.192;2.15]<-231.>

YD/DP ;THE/DB 2.08 (.0372) (.864) (-3.56) (6.14)[.740;3.66]<-19.6>
ZD/DC ;PHI/DA -36.5 (0) (.145)[.223;2.36][.708;2.37]<-165.>

PHI/DA ;THE/DB ;PSI/DP -5.02 (.0364) (.0750) (.867)<-.0119>
PHI/DC ;THE/DB ;PSI/DP -.437 (.0146) (.0379) (1.27)<-.000305>
THE/DC ;PHI/DA ;PSI/DP 4.47 (.0370) (.0746) (.590)<.00729>

PSI/DC ;PHI/DA ;THE/DB -1.22 (.0364) (.0980) (.913)<-.00397>
XD/DB ;PHI/DA ;PSI/DP 2.63 (.0744) (1.44)[-.00690;6.04]<10.3>
YD/DA ;THE/DB ;PSI/DP -1.69 (.0370) (.863)[.0968;9.88]<-5.25>

ZD/DC ;PHI/DA ;THE/DB 31.5 (0) (.0369)[.155;2.21]<5.71>
ZD/DC ;PHI/DA ;PSI/DP -61.3 (.0751) (.148)[.729;2.55]<-4.42>
XD/DC ;PHI/DA ;THE/DB -3.30 (0) (-.00495)[.173;2.15]<.0755>

XD/DC ;PHI/DA ;PSI/DP 26.3 (.0748) (.695) (-4.42)<-6.03>
YD/DP ;PHI/DA ;THE/DB 4.46 (.0367) (.856) (3.69) (-3.88)<-2.00>
ZD/DB ;PHI/DA ;PSI/DP 14.4 (.0565) (.0780)[.280;7.07]<3.19>

ZD/DC ;PHI/DA ;THE/DB ;PSI/DP 54.8 (.0362) (.0759)<.151>
XD/DC ;PHI/DA ;THE/DB ;PSI/DP -5.58 [.959;.0559]<-.0174>

TABLE III-5 CONTINUED
BO-105C TRANSFER FUNCTION FACTORS

CASE 36 120KT

DENOMINATOR: (0) (.0487) (.393) (6.63) (7.84) [-.920;.603] [.142;2.42] <2.12>

CONTROL NUMERATORS:

PHI/DA 2.69 (0) (.376) (5.59) [-.937;.598] [.198;2.44] <12.0>
THE/DB -1.17 (0) (.0310) (.0696) (.866) (9.42) [.156;2.43] <-.122>
PSI/DP 1.71 (.373) [-.0825;.495] [-.922;.594] [.999;7.19] <2.85>

PHI/DB .469 (0) (.949) (-2.80) [-.120;.586] [.193;3.17] <-4.30>
THE/DA -1.79 (0) (.981) [-.403;.0400] [.264;2.44] <-.0168>

PHI/DA ;THE/DB -3.22 (0) (.0435) (.866) [.205;2.45] <-.726>
PHI/DA ;PSI/DP 4.59 (.0896) (.374) (5.64) [-.937;.598] <.310>
THE/DB ;PSI/DP -2.03 (.0446) (.867) (9.39) [-.0723;.492] <-.178>

PHI/DB ;PSI/DP .936 (-2.83) [.624;.206] [.652;.759] <-.0652>
PHI/DP ;THE/DB 1.54 (0) (.0447) (.866) (-3.50) (5.35) <-1.12>
PHI/DC ;THE/DB 1.64 (0) (.0449) (.854) (-7.14) <-.450>

THE/DA ;PSI/DP -3.08 (-.208) (1.09) [.961;.163] <.0185>
THE/DP ;PHI/DA .873 (0) (.133) (.529) (-.630) (3.14) <-.121>
THE/DC ;PHI/DA 3.60 (0) (.0395) (.534) [.244;2.32] <.408>

PSI/DA ;THE/DB 1.56 (.0435) (.863) (-1.94) <-.114>
PSI/DB ;PHI/DA .262 (.0527) (-1.02) (1.35) [-.856;1.27] <-.0308>
XD/DB ;PHI/DA 1.19 (0) (2.54) [.209;2.43] [-.159;5.42] <521.>

YD/DA ;THE/DB -1.15 (.0436) (.862) [.186;2.35] [.136;9.82] <-23.0>
ZD/DB ;PHI/DA 11.0 (0) (.0760) [.204;2.45] [.287;7.05] <249.>
XD/DC ;PHI/DA 2.94 (0) (.705) (-3.35) (7.90) [.216;2.34] <-300.>

YD/DP ;THE/DB 2.24 (.0446) (.868) (-4.30) (6.43) [.721;3.88] <-36.1>
ZD/DC ;PHI/DA -39.7 (0) (.161) [.644;2.42] [.282;2.76] <-286.>

PHI/DA ;THE/DB ;PSI/DP -5.57 (.0437) (.0900) (.868) <-.0190>
PHI/DC ;THE/DB ;PSI/DP -.620 (.0234) (.0429) (1.02) <-.000633>
THE/DC ;PHI/DA ;PSI/DP 5.73 (.0434) (.0894) (.534) <.0119>

PSI/DC ;PHI/DA ;THE/DB -1.85 (.0437) (.109) (.818) <-.00723>
XD/DB ;PHI/DA ;PSI/DP 2.06 (.0893) (2.52) [-.151;5.39] <13.5>
YD/DA ;THE/DB ;PSI/DP -2.00 (.0443) (.862) [.136;9.71] <-7.20>

ZD/DC ;PHI/DA ;THE/DB 32.8 (0) (.0452) [.177;2.43] <8.77>
ZD/DC ;PHI/DA ;PSI/DP -68.4 (.0901) (.168) [.687;2.78] <-8.03>
XD/DC ;PHI/DA ;THE/DB -5.10 (0) (-.0145) [.199;2.32] <.401>

XD/DC ;PHI/DA ;PSI/DP 5.18 (.0897) (.700) (-3.13) (7.85) <-7.99>
YD/DP ;PHI/DA ;THE/DB 4.65 (.0440) (.849) (4.52) (-4.93) <-3.85>
ZD/DB ;PHI/DA ;PSI/DP 18.5 (.0727) (.0956) [.270;7.15] <6.57>

ZD/DC ;PHI/DA ;THE/DB ;PSI/DP 59.9 (.0438) (.0916) <.240>
XD/DC ;PHI/DA ;THE/DB ;PSI/DP -8.86 (.0391) (.1786) <-.0272>

TABLE III-5 CONTINUED
BO-105C TRANSFER FUNCTION FACTORS

CASE 37 145KT

DENOMINATOR: (0) (.0537) (-.437) (.532) (-1.07)[.0614;2.21][.995;7.41]<3.58>

CONTROL NUMERATORS:

PHI/DA 2.77 (0) (-.319) (.393) (-1.40) (6.14)[.179;2.62]<20.6>
THE/DB -1.30 (0) (.0264) (.0862) (.855) (9.26)[.116;2.62]<-.160>
PSI/DP 1.71 (-.323) (.400) (-1.24)[-.275;.575][.997;7.31]<4.85>

PHI/DB .524 (0) (4.00) (-4.47)[.323;.143][-.0522;5.13]<-5.03>
THE/DA -2.40 (0) (.890)[-.0514;.111][.284;2.95]<-.228>

PHI/DA ;THE/DB -3.65 (0) (.0518) (.830)[.191;2.81]<-1.24>
PHI/DA ;PSI/DP 4.77 (.106) (-.314) (.401) (-1.33) (5.98)<.504>
THE/DB ;PSI/DP -2.22 (.0527) (.889) (9.18)[-.255;.561]<-.299>

PHI/DB ;PSI/DP .869 (.479) (2.04) (-8.72)[.252;.157]<-.0990>
PHI/DP ;THE/DB 1.78 (0) (.0528) (.890) (-4.15) (6.60)<-2.29>
PHI/DC ;THE/DB .646 (0) (.0526) (.573) (-6.21) (9.96)<-1.20>

THE/DA ;PSI/DP -4.27 (-.150) (1.16)[.649;.191]<.0270>
THE/DP ;PHI/DA 1.35 (0) (-.624) (3.09)[.765;.312]<-.253>
THE/DC ;PHI/DA 4.79 (0) (.0456) (.535)[.255;2.41]<.678>

PSI/DA ;THE/DB -.712 (.0517) (.814) (-1.08) (-4.97)<-.160>
PSI/DB ;PHI/DA -26.0 (.0236)[.388;.147]<-.0133>
XD/DB ;PHI/DA 3.40 (0)[.234;2.47][-.902;5.89]<722.>

YD/DA ;THE/DB -1.48 (.0518) (.832)[.203;2.57][.192;9.61]<-39.2>
ZD/DB ;PHI/DA 13.8 (0) (.0964)[.165;2.81][.293;7.10]<529.>
XD/DC ;PHI/DA 6.46 (0) (.902) (-2.25) (5.01)[.186;2.46]<-395.>

YD/DP ;THE/DB 2.31 (.0526) (.896) (-5.47) (7.14)[.677;4.15]<-73.3>
ZD/DC ;PHI/DA -43.0 (0) (.184)[.546;2.34][.284;3.49]<-526.>

PHI/DA ;THE/DB ;PSI/DP -6.26 (.0513) (.107) (.886)<-.0305>
PHI/DC ;THE/DB ;PSI/DP -1.08 (.00576) (.0554) (.754)<-.000260>
THE/DC ;PHI/DA ;PSI/DP 6.55 (.0540) (.105) (.534)<.0199>

PSI/DC ;PHI/DA ;THE/DB -4.48 (.0514) (.126) (.548)<-.0159>
XD/DB ;PHI/DA ;PSI/DP 5.82 (.106) (-4.50) (-6.36)<17.7>
YD/DA ;THE/DB ;PSI/DP -2.57 (.0525) (.877)[.213;9.35]<-10.3>

ZD/DC ;PHI/DA ;THE/DB 32.9 (0) (.0554)[.113;2.80]<14.3>
ZD/DC ;PHI/DA ;PSI/DP -77.4 (.107) (.211)[.625;2.91]<-14.8>
XD/DC ;PHI/DA ;THE/DB -8.93 (0) (-.00114)[.156;2.44]<.0607>

XD/DC ;PHI/DA ;PSI/DP 11.6 (.106) (.845) (-1.89) (4.95)<-9.73>
YD/DP ;PHI/DA ;THE/DB 4.45 (.0520) (.854) (5.67) (-6.67)<-7.47>
ZD/DB ;PHI/DA ;PSI/DP 23.8 (.0873) (.119)[.281;7.27]<13.0>

ZD/DC ;PHI/DA ;THE/DB ;PSI/DP 69.0 (.0500) (.111)<.381>
XD/DC ;PHI/DA ;THE/DB ;PSI/DP -15.8 [.999;.0830]<-.109>

MICROFILMED FROM
BEST AVAILABLE COPY

TABLE III-5 CONTINUED
BO-105C TRANSFER FUNCTION FACTORS

CASE 40 60KT 1000 FT/MIN CLIMB

DENOMINATOR: (0) (.235) (.426) (4.73) (7.61)[-.0140;.428][-.0196;.552]<.201>

CONTROL NUMERATORS:

PHI/DA 2.49 (0) (.00538) (.236) (.443) (4.41)[-.0384;.442]<.00121>
THE/DP -.916 (0) (.00103) (.235) (.423) (8.78)[.000948;.538]<-.000239>
PSI/DP 1.18 (.262) (4.77) (7.66)[-.0325;.444][-.0235;.524]<.608>

PHI/DB .672 (0) (-.00319) (.235) (-.382) (.389)[.966;.755]<.428E-4>
THE/DA .249 (0) (.0128) (.250)[.830;1.00][-.710;1.09]<.000942>

PHI/DA ;THE/DB -2.45 (0) (.00126) (.00508) (.236) (.440)<-.163E-5>
PHI/DA ;PSI/DP 2.95 (.00284) (.262) (4.43)[-.0379;.443]<.00191>
THE/DB ;PSI/DP -1.09 (0) (.262) (8.89)[-.0173;.524]<-.695>

PHI/DB ;PSI/DP .842 (-.00422) (.262) (-.375)[.989;.698]<.000170>
PHI/DP ;THE/DB .641 (0) (.00126) (-.113) (.118) (.259)<-.278E-5>
PHI/DC ;THE/DB .144 (0) (0)-(.234)[-.573;.304]<.00310>

THE/DA ;PSI/DP .289 (-.0938) (.210) (-.754)[.612;.485]<.00101>
THE/DP ;PHI/DA .541 (0) (.00116) (.00972) (.253) (2.07)<.321E-5>
THE/DC ;PHI/DA .500 (0) (.231)[.923;.0128]<.189E-4>

PSI/DA ;THE/DB -.0398 (0) (.257) (2.19)[-.640;3.02]<-.208>
PSI/DB ;PHI/DA .140 (-.00871) (.250) (1.15)[-.0994;.424]<-.631E-4>
XD/DB ;PHI/DA 1.98 (0) (.00554) (.236) (.440)[.160;6.30]<.0454>

YD/DA ;THE/DB -78.7 (0) (0) (.239) (.429)<-8.08>
ZD/DB ;PHI/DA .0396 (0) (-.531)[.750;.0529][.943;2.70]<-.000431>
XD/DC ;PHI/DA -.589 (0) (.0140) (.231)[-.306;5.23]<-.0523>

YD/DP ;THE/DB 1.26 (0) (.0115) (.0558) (.387) (3.41) (4.51)<.00431>
ZD/DC ;PHI/DA -19.2 (0) (.00337) (.277) (4.41)[-.0371;.442]<-.0155>

PHI/DA ;THE/DB ;PSI/DP -2.93 (.00129) (.00243) (.262)<-.241E-5>
PHI/DC ;THE/DB ;PSI/DP -.246 (0) (-.193) (.266)<.0126>
THE/DC ;PHI/DA ;PSI/DP -.391 (-.0142) (.0202) (.166)<.186E-4>

PSI/DC ;PHI/DA ;THE/DB -1.60 (0) (.0130) (.229)<-.00477>
XD/DB ;PHI/DA ;PSI/DP 2.37 (.00284) (.262)[.159;6.31]<.0701>
YD/DA ;THE/DB ;PSI/DP -94.3 (0) (.261)<-24.6>

ZD/DC ;PHI/DA ;THE/DB 18.9 (0) (.275)[.953;.00231]<.276E-4>
ZD/DC ;PHI/DA ;PSI/DP -22.9 (.00431) (4.43)[-.0378;.443]<-.0855>
XD/DC ;PHI/DA ;THE/DB .0614 (0) (.0173) (.239) (-2.51)<-.000636>

XD/DC ;PHI/DA ;PSI/DP .140 (.00535) (.152)[-.0386;9.54]<.0103>
YD/DP ;PHI/DA ;THE/DB 2.87 (0) (.00125)[.820;.171]<.000105>
ZD/DB ;PHI/DA ;PSI/DP .0400 (-.00137) (-2.97)[.295;1.22]<.000241>

ZD/DC ;PHI/DA ;THE/DB ;PSI/DP 22.7 (.00115) (.00404)<.000106>
XD/DC ;PHI/DA ;THE/DB ;PSI/DP .175 (.0535) (-.0744)<-.000695>

TABLE III-5 CONCLUDED
BO-105C TRANSFER FUNCTION FACTORS

CASE 41 60 KT 1000 FT/MIN DESCENT

DENOMINATOR: (0) (.0357) (.305) (6.00)[-.606;.491][.125;2.01]<.669>

CONTROL NUMERATORS:

PHI/DA 2.47 (0) (.306) (5.66)[-.611;.492][.142;2.01]<4.20>
THE/DB -12.2 (0) (.0281) (.0392) (.624)[.133;2.00]<-.0335>
PSI/DP 13.4 (.306) (6.19)[.0263;.438][-.615;.493]<1.18>

PHI/DB .733 (0) (.246) (-.288)[-.200;1.52][.459;3.01]<-1.08>
THE/DA .231 (0) (.0288) (.724)[.102;.881][.192;1.87]<.0130>

PHI/DA ;THE/DB -2.71 (0) (.0277) (.625)[.149;2.01]<-.189>
PHI/DA ;PSI/DP 3.21 (.0549) (.307) (5.77)[-.614;.494]<.0760>
THE/DB ;PSI/DP -16.0 (.0282) (.623)[.0251;.438]<-.0537>

PHI/DB ;PSI/DP 1.05 (-.315)[.807;.124][.390;1.72]<-.0152>
PHI/DP ;THE/DB .907 (0) (.0282) (.622) (-3.62) (4.88)<-.281>
PHI/DC ;THE/DB .220 (0) (.0275) (.760) (-4.74) (5.93)<-.127>

THE/DA ;PSI/DP .301 (-.139) (.297) (.885)[.334;.482]<.00255>
THE/DP ;PHI/DA .610 (0) (-.0540) (1.91)[.935;.441]<-.0123>
THE/DC ;PHI/DA 2.63 (0) (.0287) (.390)[.190;1.93]<.110>

PSI/DA ;THE/DB -.441 (.0277) (.625)[-.133;2.16]<-.0357>
PSI/DB ;PHI/DA .257 (.0198) (-.247) (.386)[-.699;2.48]<-.00297>
XD/DB ;PHI/DA 1.71 (0) (.799)[.151;2.00][.0370;6.31]<218.>

YD/DA ;THE/DB -88.5 (.0277) (.624)[.146;1.98]<-6.03>
ZD/DB ;PHI/DA 5.88 (0) (.0436)[.151;2.01][.366;6.92]<49.8>
XD/DC ;PHI/DA -77.9 (0) (.413)[.181;1.92]<-119.>

YD/DP ;THE/DB 1.54 (.0282) (.623) (-3.39) (8.91)[.712;3.34]<-9.06>
ZD/DC ;PHI/DA -24.9 (0) (.143)[.180;2.17][.993;2.20]<-80.9>

PHI/DA ;THE/DB ;PSI/DP -3.59 (.0276) (.0554) (.624)<-.00343>
PHI/DC ;THE/DB ;PSI/DP -.136 (.0298) (-.0536) (1.70)<.000369>
THE/DC ;PHI/DA ;PSI/DP 3.19 (.0321) (.0534) (.387)<.00211>

PSI/DC ;PHI/DA ;THE/DB -1.28 (.0277) (.0748) (.680)<-.00180>
XD/DB ;PHI/DA ;PSI/DP 2.26 (.0550) (.795)[.0404;6.32]<3.94>
YD/DA ;THE/DB ;PSI/DP -116. (.0280) (.623)<-2.03>

ZD/DC ;PHI/DA ;THE/DB 21.1 (0) (.0275)[.116;2.00]<2.34>
ZD/DC ;PHI/DA ;PSI/DP -32.7 (.0558) (.151) (2.12) (2.61)<-1.53>
XD/DC ;PHI/DA ;THE/DB -1.91 (0) (.0540)[.154;1.90]<-.372>

XD/DC ;PHI/DA ;PSI/DP 10.6 (.0546) (.408) (-8.88)<-2.09>
YD/DP ;PHI/DA ;THE/DB 3.30 (.0278) (.619) (3.14) (-3.24)<-.578>
ZD/DB ;PHI/DA ;PSI/DP 7.55 (.0420) (.0575)[.372;7.04]<.905>

ZD/DC ;PHI/DA ;THE/DB ;PSI/DP 29.0 (.0269) (.0563)<.0440>
XD/DC ;PHI/DA ;THE/DB ;PSI/DP -2.48 [.970;.0787]<-.0153>

BLANK PAGE

SECTION IV

BELL AH-1G

The AH-1G is a single turbine attack aircraft intended specifically for armed helicopter missions. It combines the basic transmission, rotor system, and power plant of the UH-1C but differs in the fuselage. The aircraft carries a crew of two seated in tandem with the pilot aft and the copilot/gunner forward. Both have a full set of flight controls, however. (Only the pilot's controls are described in Fig. IV-1.)

The rotor system consists of a two-bladed, all metal, semi-rigid main rotor with an underslung feathering axis hub, and is powered by a Lycoming T53-L-13 turbo-shaft engine derated to 1100 shaft horsepower.

Figure IV-2 describes the flight control system which is composed of a conventional mechanically actuated hydraulic boost system plus an electronically actuated three-axis stability and control augmentation system (SCAS). An all movable elevator is mechanically linked to the longitudinal swashplate with a non-linear gearing. The aircraft is normally operated with the SCAS engaged. Both hydraulic boost lags and SCAS actuator lags are neglected here. According to Ref. 5 the latter are 0.08 seconds in the cyclic controls and 0.05 seconds in the yaw control.

The derivative data presented here were produced by the AGAJ7407 version of the manufacturer's C81 Rotorcraft Flight Simulation Computer Program.

As shown in Fig. IV-1, the AH-1G airframe is configured with stub wings to carry armament and to help unload the rotor in cruising flight. The wings produce a slight downwash effect on the elevator which creates a non-zero M_w stability derivative. The role of the M_w derivative in the vehicle dynamics was estimated to be so small, however, that it was not tabulated nor was it included in the calculation of transfer functions.

Ref. 5, the basic data source, contains a detailed description of the AH-1G flight control system including block diagram, mechanical linkage schematics, and a verbal description. In addition, several detailed loading breakdowns are included.

TABLE IV-1

AH-1G DESCRIPTIVE DATA

MAIN ROTOR

- Blades 2
- Radius 6.706 m (22 ft)
- Chord 0.686 m (2.25 ft)
- Section 9.33% thickness, special symmetrical section
- Hub type Teetering
- Undersling 11.4 cm (4.5 in)
- Twist -10 deg
- Pitch flap coupling (δ_3) Zero
- Shaft tilt Zero
- Design rpm 314 to 324 (power on), 294 to 339 (power off)*
- Hub location FS 200, WL 152.76†
- Blade flapping inertia 1873.44 kg-m^2 (1381.8 slug-ft^2)

TAIL ROTOR

- Blades 2
- Radius 1.295 m (4.25 ft)
- Chord 0.214 m (0.701 ft)
- Twist Zero
- Gear ratio 5.123
- Hub location FS 520.7, WL 118.27, BL -14.85

WING

- Area 2.583 m^2 (27.8 ft^2)
- Aspect ratio 3.91
- Center of pressure location FS 192.0, BL 39.0, WL 62.0
- Incidence 14 deg
- Dihedral 3.5 deg

ELEVATOR (EACH SIDE, EXCLUDING FUSELAGE CARRY-THROUGH)

- Area 0.683 m^2 (7.35 ft^2)
- Aspect ratio 1.49
- Center of pressure location FS 398.5, BL $\pm$ 22.07, WL 56.0
- Incidence Variable

VERTICAL STABILIZER

- Area 1.728 m^2 (18.60 ft^2)
- Aspect ratio 1.56
- Center of pressure location FS 501.0, WL 84.0

---

* From Ref. 10.

† Manufacturer's fuselage reference system.

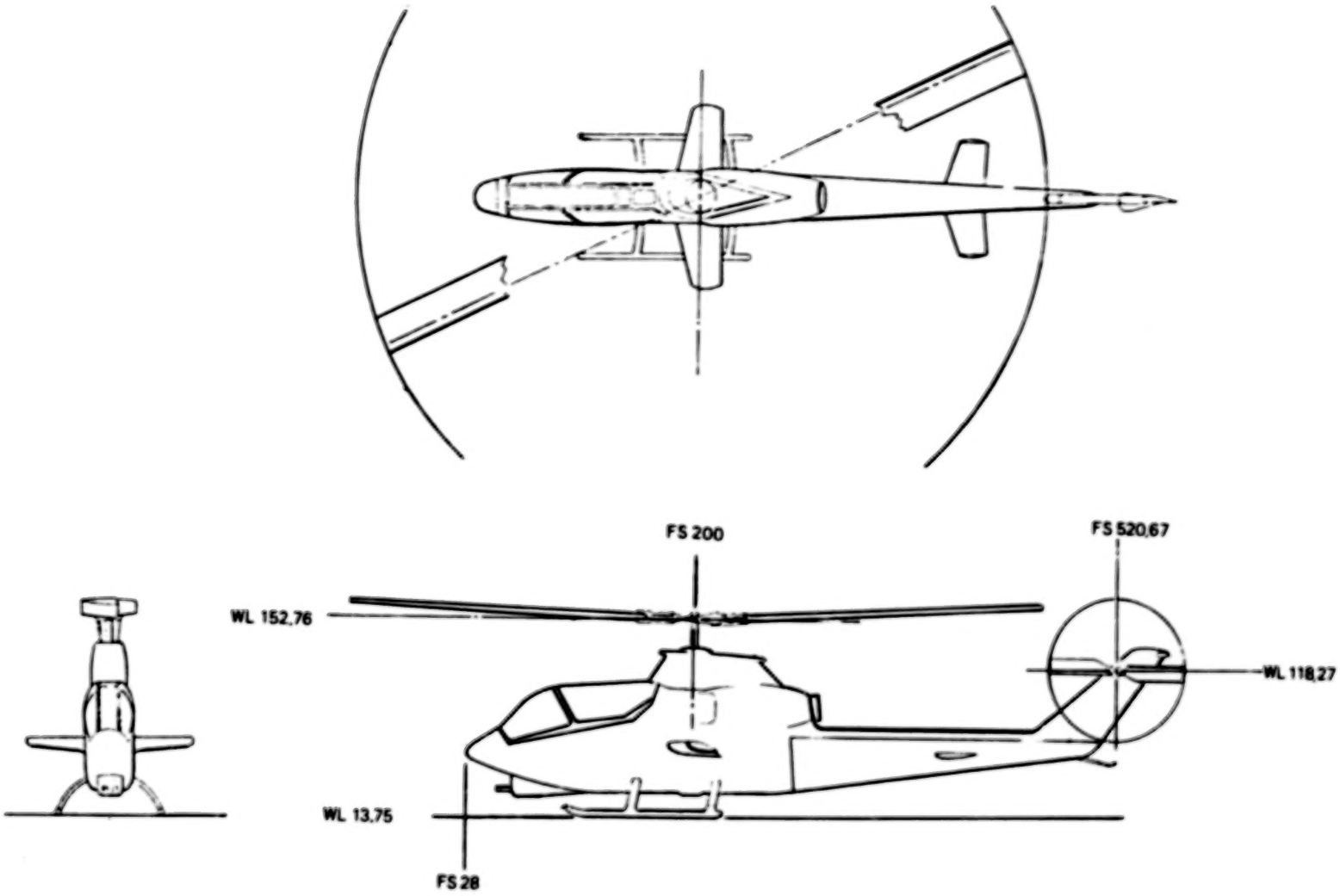

Figure IV-1. AH-1G General Arrangement

a. Block Diagram

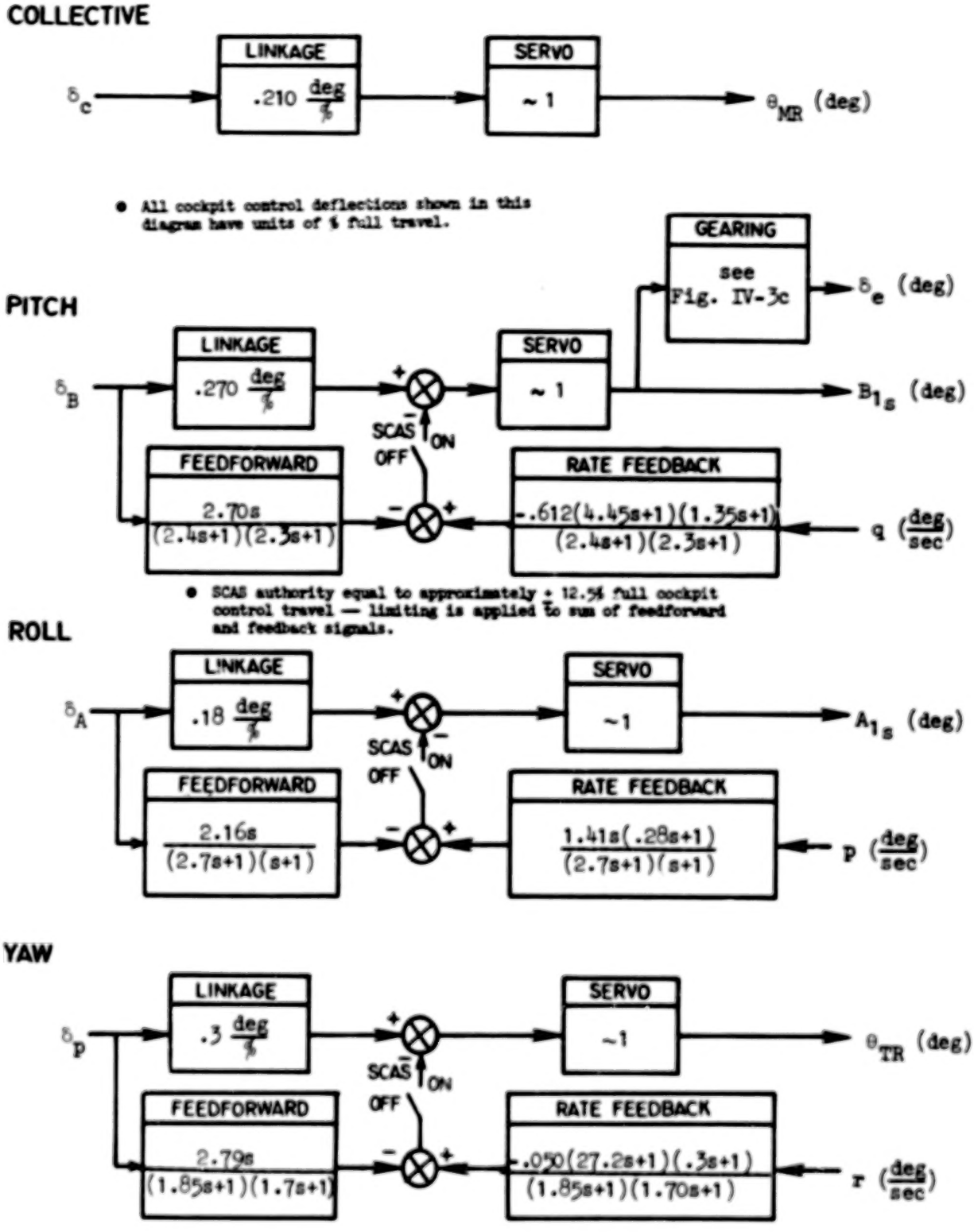

Figure IV-2. AH-1G Control System Description

b. Cockpit Controller Characteristics

CONTROLLER	100% FULL TRAVEL cm (in)	FORCE GRADIENT N/cm (lb/in)
Collective, δ_c	25.4 (10.)	—
Longitudinal Cyclic, δ_B	30.48 (12.)	2.12 (1.21)
Lateral Cyclic, δ_A	30.48 (12.)	1.73 (.99)
Pedal, δ_p	16.51 (6.5)	19.6 (11.2)

c. Swashplate-to-Elevator Gearing

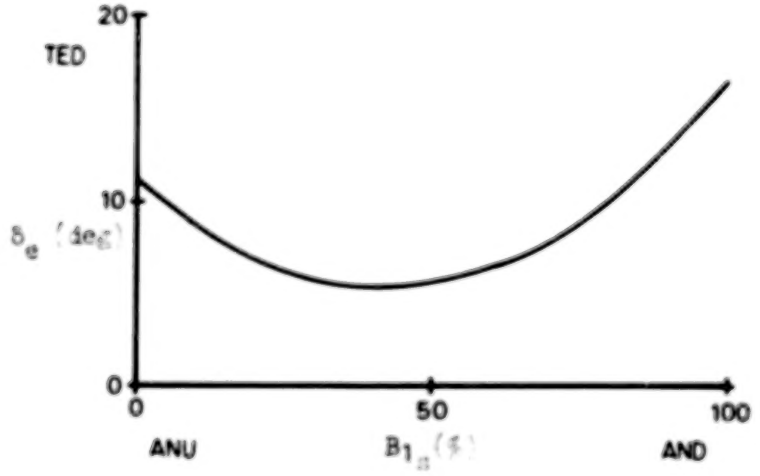

Figure IV-2 (Concluded)

a. Loading Envelope

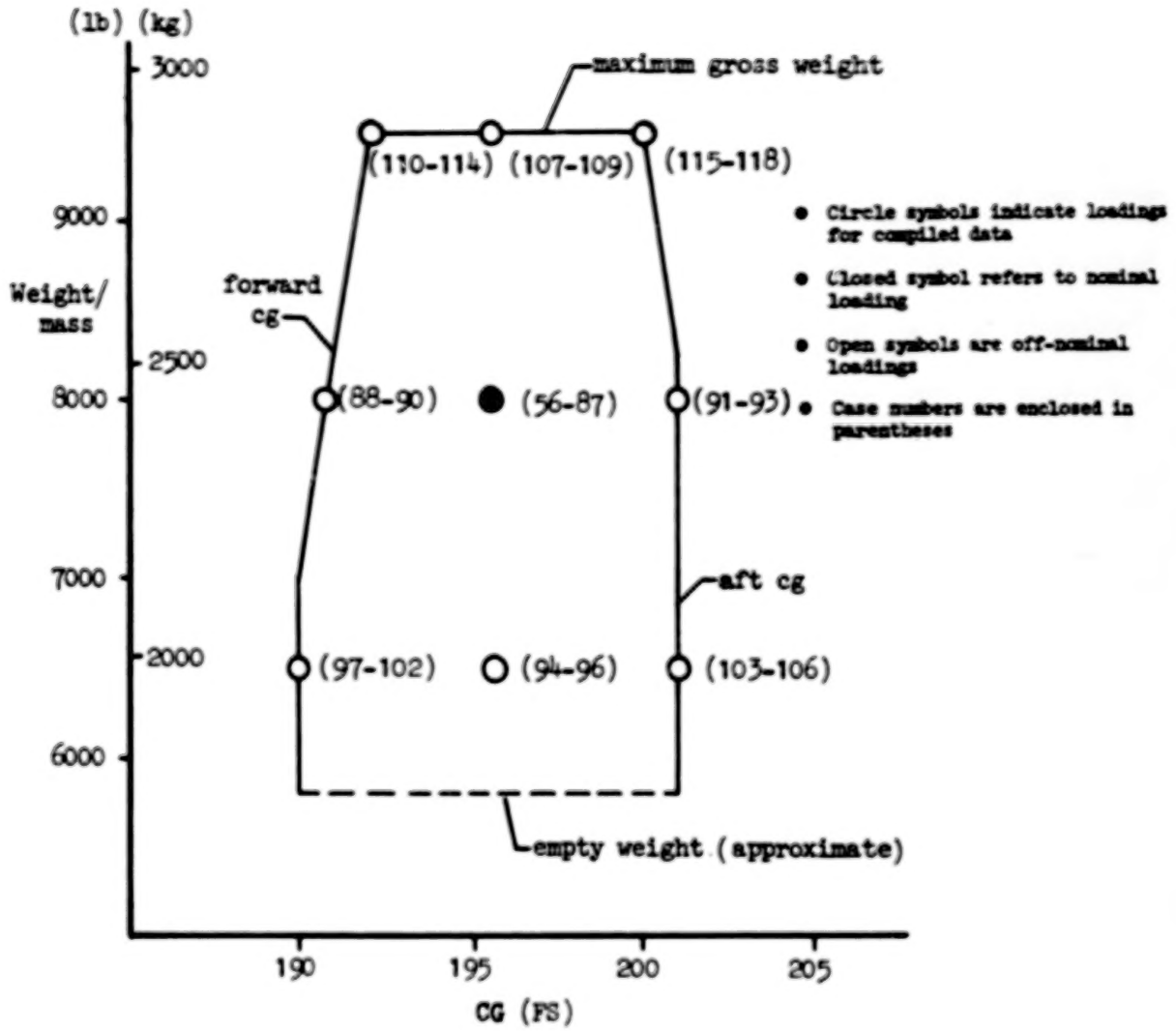

b. Moments of Inertia for Compiled Data

CONDITION	MASS (WEIGHT) kg (lb)	CG FS	CG WL	I_x	I_y	I_z	I_{xz}
				kg-m^2 (slug-ft^2)			
Nominal Weight	3629(8000)	190.8 to 201.0	73.0	3661(2700)	17354(12800)	14643(10800)	1288(950)
Light Weight	2948(6500)	190.0 to 201.0	78.0	2983(2200)	15863(11700)	13151(9700)	1288(950)
Heavy Weight	4309(9500)	192.0 to 200.0	68.0	4271(3150)	18032(13300)	16066(11850)	1288(950)

Figure IV-3. AH-1G Loading Summary

TABLE IV-2

AH-1G INDEX OF FLIGHT CONDITIONS FOR DERIVATIVES AND TRANSFER FUNCTION FACTORS

CASE	CONDITION	AIRSPEED kt	VERTICAL VELOCITY m/sec(ft/sec)	ALTITUDE m(ft)	MASS(WEIGHT) kg(lb)	cg FS	REPORT PAGE NUMBER		
							DERIVATIVES SI(US)	TRANSFER FUNCTION	
								SCAS OFF	SCAS ON
56	Airspeed Variation	-40	Zero	Sea Level	3629(8000)	195.5	122(143)	164	
57		-20						165	166
58		-10							
59		Hover					123(144)	167*	171*
60		10							
61		20						175*	179*
62		40					124(145)	183	184
63		60						185*	189*
64		80						193	194
65		100					125(146)	195	196
66		120						197	198
67		140						199	
68	Maximum Power Climb	Zero†	8.5(28.0)				126(147)		
69		60	11.9(39.0)					200	201
70		100	10.6(34.9)						
71	Autorotation	60	-9.5(-31.1)				127(148)	202	203
72		100	-11.4(-37.5)						
73	Descent	Zero†	-3.0(-10)						
74			-6.1(-20)				128(149)		
75	Climb		3.0(10)						
76			6.1(20)						
77		60	6.1(20)				129(150)	204	
78			3.0(10)						
79	Descent		-3.0(-10)						
80			-6.1(-20)				130(151)		
81	Operation at Altitude	Hover	Zero	3048(10000)				205	
82		60							
83		100					131(152)		
84	Maximum Climb at Altitude	Zero†	6.1(20)						
85		60	8.5(28.0)						
86	Autorotation at Altitude		-8.5(-27.8)				132(153)		
87		100	-9.1(30.0)						
88	Fwd cg, Nominal Weight	Hover	Zero	Sea Level		190.8			
89		60					133(154)		
90		100							
91	Aft cg, Nominal Weight	Hover				201.0		206	
92		60					134(155)		
93		100							
94	Light Weight	Hover			2948(6500)	195.5		207	
95		60					135(156)	208	
96		100							
97	Fwd cg, Light Weight	Hover				190.0			
98		60					136(157)		
99	...and Maximum Climb	Zero†	14.4(47.4)						
100		60	14.6(48.0)					209	
101	...and Autorotation	Zero†	-15.2(-50.0)				137(158)		
102		60	-8.5(-28.0)						
103	Aft cg, Light Weight	Hover	Zero			201.0			
104		60	Zero				138(159)		
105	...and Maximum Climb		15.5(50.9)						
106	...and Autorotation		-8.8(-29.0)						
107	Heavy Weight	Hover	Zero		4309(9500)	195.5	139(160)	210	
108		60						211	
109		100							
110	Fwd cg, Heavy Weight	Hover				192.0	140(161)		
111		60							
112	...and Maximum Climb	Zero†	3.7(12.0)						
113		60	9.6(31.4)				141(162)		
114	...and Autorotation	60	-8.1(-26.5)						
115	Aft cg, Heavy Weight	Hover	Zero			200.0			
116		60	Zero				142(163)		
117	...and Maximum Climb		9.8(32.2)						
118	...and Autorotation		-8.8(-28.8)						

* Extended list of transfer function factors.

† Zero forward velocity, i.e., airspeed is equal to vertical velocity.

TABLE IV-3
AH-IG STABILITY AND CONTROL DERIVATIVES -- SI UNITS
(BODY-FIXED FRL AXIS SYSTEM)

CASE 56 -40 KT LEVEL FLIGHT AT SEA LEVEL 3629 KG MID CG

PHI	THETA	PSI	ALPHA	BETA	GAMMA	OMR	B1S	A1S	OTR
-0.75	-2.43	0.00	177.57	-0.03	180.00	12.72	-4.46	-0.13	3.41

XDOT	ZDOT	UO	VO	WO	VTO
-20.58	0.00	-20.56	-0.01	0.87	20.58

	U	W	Q	V	P	R	DC	DB	DA	DP
X	-0.0136	-0.0438	0.4997	-0.0021	-0.4581	0.0371	-0.0576	0.1401	0.0052	0.0224
Z	0.1286	-0.6508	0.0722	-0.0093	0.3117	0.5465	-1.6164	-0.2235	-0.0120	-0.0105
M	0.0059	0.0087	-0.1329	0.0021	0.1793	-0.0082	-0.0116	-0.0607	-0.0025	-0.0106
Y	-0.0019	-0.0249	-0.4672	-0.0029	-0.5620	0.1722	-0.0585	-0.0123	0.0989	0.1891
L'	0.0062	-0.0567	-0.7887	-0.0187	-1.0348	0.0873	-0.0582	-0.0285	0.1884	0.1216
N'	0.0151	-0.0261	0.3078	0.0218	-0.0419	-0.4312	0.1381	-0.0120	0.0131	-0.3219

CASE 57 -20 KT LEVEL FLIGHT AT SEA LEVEL 3629 KG MID CG

PHI	THETA	PSI	ALPHA	BETA	GAMMA	OMR	B1S	A1S	OTR
-0.97	-2.95	0.00	177.05	-0.05	180.00	13.79	-3.99	-0.53	5.75

XDOT	ZDOT	UO	VO	WO	VTO
-10.29	0.00	-10.28	-0.01	0.53	10.29

	U	W	Q	V	P	R	DC	DB	DA	DP
X	0.0028	-0.0369	0.3838	-0.0032	-0.4651	0.0352	-0.0514	0.1619	0.0151	0.0470
Z	0.2097	-0.4833	-0.3042	-0.0246	0.1667	0.5488	-1.4700	-0.1050	-0.0091	-0.0117
M	0.0112	-0.0013	-0.1475	0.0031	0.1847	-0.0166	-0.0141	-0.0687	-0.0072	-0.0170
Y	0.0009	-0.0151	-0.4697	-0.0007	-0.4032	0.1762	-0.0437	0.0023	0.1074	0.1897
L'	0.0221	-0.0405	-0.8199	-0.0247	-0.7911	0.0787	-0.0156	-0.0022	0.2018	0.1257
N'	0.0251	-0.0179	0.3394	0.0273	-0.1375	-0.3874	0.1873	-0.0045	0.0139	-0.3029

CASE 58 -10 KT LEVEL FLIGHT AT SEA LEVEL 3629 KG MID CG

PHI	THETA	PSI	ALPHA	BETA	GAMMA	OMR	B1S	A1S	OTR
-1.07	-1.92	0.00	178.08	-0.04	180.00	10.41	-2.79	-1.08	7.34

XDOT	ZDOT	UO	VO	WO	VTO
-5.14	0.00	-5.14	-0.00	0.17	5.14

	U	W	Q	V	P	R	DC	DB	DA	DP
X	-0.0208	-0.0211	0.2306	-0.0101	-0.5531	-0.0032	-0.0635	0.1377	-0.0033	-0.0108
Z	0.1777	-0.4042	-0.3625	-0.0405	0.1011	0.6155	-1.4819	-0.0299	0.0016	0.0125
M	0.0251	-0.0121	-0.2054	0.0052	0.2236	0.0162	0.0035	-0.0550	0.0016	0.0110
Y	0.0058	-0.0141	-0.5418	-0.0077	-0.3502	0.2117	-0.0561	-0.0046	0.1011	0.1693
L'	0.0313	-0.0297	-0.9046	-0.0241	-0.7256	0.0249	-0.0211	-0.0142	0.1956	0.1105
N'	0.0228	-0.0076	0.2917	0.0402	-0.2984	-0.4796	0.2129	-0.0058	0.0116	-0.3061

TABLE IV-3 CONTINUED
AH-IG STABILITY AND CONTROL DERIVATIVES -- SI UNITS
(BODY-FIXED FRL AXIS SYSTEM)

CASE 59 1 KT LEVEL FLIGHT AT SEA LEVEL 3629 KG MID CG

PHI	THETA	PSI	ALPHA	BETA	GAMMA	OMR	B1S	A1S	OTR
-1.15	-0.73	0.00	-0.73	0.01	0.00	14.83	-0.76	-1.80	8.40

XDOT	ZDOT	UO	VO	WO	VTO
0.51	0.00	0.51	0.00	-0.01	0.51

	U	W	Q	V	P	R	DC	DB	DA	DP
X	-0.0165	-0.0155	0.1114	-0.0285	-0.5439	-0.0173	-0.0307	0.1491	-0.0016	-0.0178
Z	-0.1208	-0.3726	-0.0034	-0.0932	-0.0410	0.6326	-1.5313	0.0216	-0.0004	-0.0037
M	0.0016	-0.0109	-0.2345	0.0022	0.2305	0.0175	0.0030	-0.0575	0.0014	0.0127
Y	0.0173	-0.0051	-0.4859	-0.0552	-0.3361	0.2189	-0.0662	-0.0142	0.0971	0.1540
L'	0.0280	-0.0198	-1.0559	-0.0285	-0.7662	-0.0403	-0.0364	-0.0270	0.1854	0.0715
N'	-0.0038	-0.0154	-0.1161	0.0518	-0.3945	-0.5366	0.2282	-0.0037	0.0126	-0.3197

CASE 60 10 KT LEVEL FLIGHT AT SEA LEVEL 3629 KG MID CG

PHI	THETA	PSI	ALPHA	BETA	GAMMA	OMR	B1S	A1S	OTR
-1.05	-1.10	0.00	-1.10	0.02	0.00	14.42	-0.69	-2.02	7.52

XDOT	ZDOT	UO	VO	WO	VTO
5.14	0.00	5.14	0.00	-0.10	5.14

	U	W	Q	V	P	R	DC	DB	DA	DP
X	-0.0163	-0.0106	0.2958	-0.0154	-0.5325	-0.0181	-0.0347	0.1578	0.0048	-0.0005
Z	-0.2090	-0.6060	0.2502	-0.0530	-0.0956	0.5975	-1.4829	0.0512	0.0020	-0.0025
M	0.0006	-0.0086	-0.2289	0.0055	0.2141	0.0049	0.0033	-0.0633	-0.0022	0.0014
Y	0.0180	0.0002	-0.4762	-0.0562	-0.3538	0.2458	-0.0389	0.0017	0.1064	0.1787
L'	0.0224	-0.0109	-0.9165	-0.0206	-0.8109	0.0164	0.0078	0.0029	0.2025	0.1235
N'	-0.0133	-0.0145	0.0522	0.0437	-0.4285	-0.5325	0.2140	-0.0003	0.0138	-0.3045

CASE 61 20 KT LEVEL FLIGHT AT SEA LEVEL 3629 KG MID CG

PHI	THETA	PSI	ALPHA	BETA	GAMMA	OMR	B1S	A1S	OTR
-0.91	-1.59	0.00	-1.59	0.03	0.00	13.81	-0.73	-2.12	6.11

XDOT	ZDOT	UO	VO	WO	VTO
10.29	0.00	10.28	0.00	-0.28	10.29

	U	W	Q	V	P	R	DC	DB	DA	DP
X	-0.0283	-0.0194	0.3800	-0.0130	-0.5282	-0.0190	-0.0526	0.1566	0.0032	-0.0062
Z	-0.2485	-0.5922	0.2704	-0.0429	-0.1489	0.5895	-1.4599	0.1017	0.0042	-0.0028
M	0.0015	-0.0059	-0.2289	0.0066	0.2102	0.0058	0.0102	-0.0622	-0.0013	0.0042
Y	0.0182	0.0000	-0.4800	-0.0599	-0.3485	0.2471	-0.0292	0.0004	0.1036	0.1615
L'	0.0117	-0.0069	-0.9171	-0.0209	-0.7980	0.0241	0.0167	0.0024	0.1975	0.1065
N'	-0.0210	-0.0122	0.1957	0.0198	-0.4010	-0.5311	0.1982	0.0028	0.0134	-0.2881

TABLE IV-3 CONTINUED
AH-IG STABILITY AND CONTROL DERIVATIVES -- SI UNITS
(BODY-FIXED FRL AXIS SYSTEM)

CASE 62 40 KT LEVEL FLIGHT AT SEA LEVEL 3629 KG MID CG

PHI	THETA	PSI	ALPHA	BETA	GAMMA	θMR	B1S	A1S	θTR
-0.71	-1.81	0.00	-1.81	0.02	0.00	12.77	-0.10	-1.93	3.49

XDOT	ZDOT	U0	V0	W0	VT0
20.58	0.00	20.57	0.01	-0.65	20.58

	U	W	Q	V	P	R	DC	DB	DA	DP
X	-0.0273	-0.0263	0.4762	-0.0084	-0.5034	-0.0299	-0.0651	0.1582	0.0019	-0.0090
Z	-0.1688	-0.7094	-0.0803	-0.0315	-0.2877	0.5040	-1.5941	0.2178	0.0063	-0.0084
M	0.0055	-0.0075	-0.2805	0.0022	0.1951	0.0149	0.0120	-0.0626	-0.0009	0.0060
Y	0.0081	0.0017	-0.4593	-0.0793	-0.5876	0.3129	-0.0085	0.0045	0.1020	0.1749
L'	0.0016	-0.0045	-0.7411	-0.0197	-1.2312	0.0250	0.0389	0.0129	0.1944	0.1157
N'	-0.0201	-0.0207	0.2837	0.0419	-0.4142	-0.7310	0.1441	0.0108	0.0116	-0.3087

CASE 63 60 KT LEVEL FLIGHT AT SEA LEVEL 3629 KG MID CG

PHI	THETA	PSI	ALPHA	BETA	GAMMA	θMR	B1S	A1S	θTR
-0.69	-2.25	0.00	-2.25	0.03	0.00	12.42	0.70	-1.54	2.39

XDOT	ZDOT	U0	V0	W0	VT0
30.87	0.00	30.84	0.01	-1.21	30.87

	U	W	Q	V	P	R	DC	DB	DA	DP
X	-0.0268	-0.0286	0.5233	-0.0046	-0.4897	-0.0204	-0.0811	0.1571	0.0020	-0.0061
Z	-0.1060	-0.8377	-0.4333	-0.0246	-0.4353	0.5395	-1.8011	0.3542	0.0088	-0.0102
M	0.0064	-0.0097	-0.3244	0.0000	0.1854	0.0199	0.0113	-0.0620	-0.0011	0.0060
Y	0.0006	-0.0003	-0.4302	-0.1019	-0.6232	0.3976	-0.0072	0.0023	0.1010	0.2087
L'	-0.0102	-0.0101	-0.6703	-0.0151	-1.2781	0.0375	0.0305	0.0090	0.1919	0.1342
N'	-0.0159	-0.0286	0.3029	0.0473	-0.3518	-0.8970	0.1156	0.0135	0.0106	-0.3713

CASE 64 80 KT LEVEL FLIGHT AT SEA LEVEL 3629 KG MID CG

PHI	THETA	PSI	ALPHA	BETA	GAMMA	θMR	B1S	A1S	θTR
-0.78	-2.71	0.00	-2.71	0.04	0.00	12.55	1.77	-1.31	2.02

XDOT	ZDOT	U0	V0	W0	VT0
41.16	0.00	41.11	0.03	-1.94	41.16

	U	W	Q	V	P	R	DC	DB	DA	DP
X	-0.0296	-0.0261	0.5384	-0.0027	-0.4727	-0.0304	-0.0822	0.1568	0.0019	-0.0128
Z	-0.0731	-0.9241	-0.7182	-0.0213	-0.6018	0.5313	-1.9722	0.5057	0.0115	-0.0124
M	0.0071	-0.0139	-0.3656	-0.0014	0.1734	0.0251	0.0077	-0.0637	-0.0017	0.0094
Y	0.0022	-0.0051	-0.4331	-0.1236	-0.5974	0.4672	-0.0111	0.0075	0.1022	0.2183
L'	-0.0070	-0.0185	-0.6941	-0.0107	-1.2282	0.0351	0.0168	0.0194	0.1934	0.1326
N'	-0.0138	-0.0306	0.2347	0.0492	-0.3369	-1.0[illegible]	0.1002	0.0181	0.0091	-0.4007

MICROFILMED FROM
BEST AVAILABLE COPY

TABLE IV-3 CONTINUED
AH-1G STABILITY AND CONTROL DERIVATIVES -- SI UNITS
(BODY-FIXED FRL AXIS SYSTEM)

CASE 65 100 KT LEVEL FLIGHT AT SEA LEVEL 3629 KG MID CG

PHI	THETA	PSI	ALPHA	BETA	GAMMA	OMR	B1S	A1S	OTR
-0.99	-3.34	0.00	-3.34	0.06	0.00	13.06	3.06	-1.29	2.03

XDOT	ZDOT	U0	V0	W0	VT0
51.44	0.00	51.36	0.05	-1.00	51.44

	U	W	Q	V	P	R	DC	DB	DA	DP
X	-0.0353	-0.0206	0.5002	-0.0022	-0.4748	-0.0230	-0.0732	0.1509	0.0006	-0.0117
Z	-0.0520	-0.9907	-0.9529	-0.0216	-0.7840	0.5695	-2.1192	0.6647	0.0146	-0.0191
M	0.0084	-0.0191	-0.3849	-0.0022	0.1739	0.0329	0.0025	-0.0647	-0.0008	0.0117
Y	0.0031	-0.0112	-0.4414	-0.1451	-0.5333	0.5279	-0.0234	0.0101	0.1007	0.2309
L'	-0.0049	-0.0265	-0.7296	-0.0083	-1.1043	0.0254	-0.0027	0.0253	0.1912	0.1393
N'	-0.0104	-0.0248	0.1597	0.0498	-0.3083	-1.1848	0.1078	0.0213	0.0103	-0.4220

CASE 66 120 KT LEVEL FLIGHT AT SEA LEVEL 3629 KG MID CG

PHI	THETA	PSI	ALPHA	BETA	GAMMA	OMR	B1S	A1S	OTR
-1.32	-4.24	0.00	-4.24	0.10	0.00	14.03	4.67	-1.52	2.49

XDOT	ZDOT	U0	V0	W0	VT0
61.73	0.00	61.56	0.11	-4.56	61.73

	U	W	Q	V	P	R	DC	DB	DA	DP
X	-0.0416	-0.0105	0.4694	-0.0011	-0.4478	-0.0313	-0.0496	0.1420	0.0001	-0.0161
Z	-0.0337	-1.0451	-1.0807	-0.0266	-0.9703	0.6303	-2.2473	0.8278	0.0184	-0.0192
M	0.0096	-0.0263	-0.4074	-0.0036	0.1566	0.0391	-0.0081	-0.0694	-0.0008	0.0177
Y	0.0044	-0.0204	-0.4495	-0.1659	-0.4162	0.6020	-0.0425	0.0189	0.1021	0.2396
L'	-0.0025	-0.0358	-0.8015	-0.0087	-0.9010	0.0414	-0.0239	0.0382	0.1942	0.1422
N'	-0.0077	-0.0091	-0.0174	0.0476	-0.3474	-1.3367	0.1443	0.0126	0.0113	-0.4407

CASE 67 140 KT LEVEL FLIGHT AT SEA LEVEL 3629 KG MID CG

PHI	THETA	PSI	ALPHA	BETA	GAMMA	OMR	B1S	A1S	OTR
-1.79	-5.54	0.00	-5.54	0.17	0.00	15.57	6.59	-2.02	3.49

XDOT	ZDOT	U0	V0	W0	VT0
72.02	0.00	71.68	0.22	-6.95	72.02

	U	W	Q	V	P	R	DC	DB	DA	DP
X	-0.0514	0.0025	0.4110	0.0001	-0.4207	-0.0456	-0.0139	0.1300	-0.0003	-0.0216
Z	-0.0204	-1.0982	-1.0444	-0.0374	-1.1782	0.7171	-2.3752	1.0107	0.0224	-0.0211
M	0.0110	-0.0155	-0.4162	-0.0055	0.1370	0.0509	-0.0244	-0.0779	-0.0013	0.0273
Y	0.0057	-0.0311	-0.4808	-0.1871	-0.2510	0.6740	-0.0728	0.0332	0.1053	0.2436
L'	0.0001	-0.0419	-0.9541	-0.0114	-0.6099	0.0147	-0.0503	0.0503	0.1989	0.1388
N'	-0.0041	0.0227	-0.2939	0.0448	-0.3939	-1.5129	0.2256	-0.0294	0.0305	-0.4516

TABLE IV-3 CONTINUED
AH-1G STABILITY AND CONTROL DERIVATIVES -- SI UNITS
(BODY-FIXED FRL AXIS SYSTEM)

CASE 68 17 KT 9 M/S SEA LEVEL 3629 KG MID CG

PHI	THETA	PSI	ALPHA	BETA	GAMMA	OMR	B1S	A1S	OTR
-1.77	2.83	0.00	-87.17	1.76	90.00	16.91	2.19	-2.51	11.02

XDOT	ZDOT	UO	VO	WO	VTO
0.00	-8.53	0.82	0.26	-8.52	8.53

	U	W	Q	V	P	R	DC	DB	DA	DP
X	-0.0253	0.0121	0.0677	-0.0176	-0.5267	-0.0662	0.0741	0.1734	0.0047	0.0018
Z	-0.0497	-0.5069	-0.1913	-0.0966	-0.2348	0.7601	-1.5848	0.0157	-0.0003	-0.0050
M	-0.0008	-0.0443	-0.3009	-0.0016	0.2015	-0.0342	-0.0343	-0.0662	-0.0013	0.0226
Y	0.0102	-0.0293	-0.6573	-0.0809	-0.1428	0.3067	-0.0912	-0.0135	0.1058	0.1733
L'	0.0238	-0.0335	-1.3200	-0.0336	-0.4366	0.0156	-0.0552	-0.0325	0.1975	0.0802
N'	0.0056	0.0389	-0.3402	0.0698	-0.4774	-0.6729	0.3150	-0.0036	0.0130	-0.3445

CASE 69 60 KT 12 M/S SEA LEVEL 3629 KG MID CG

PHI	THETA	PSI	ALPHA	BETA	GAMMA	OMR	B1S	A1S	OTR
-1.80	1.13	0.00	-21.51	0.66	22.65	16.95	0.01	-3.09	8.05

XDOT	ZDOT	UO	VO	WO	VTO
28.48	-11.89	28.71	0.36	-11.32	30.87

	U	W	Q	V	P	R	DC	DB	DA	DP
X	-0.0285	0.0153	0.1094	-0.0035	-0.4721	-0.0873	0.0235	0.1670	0.0036	-0.0093
Z	-0.0848	-0.8153	-0.6804	-0.0526	-0.4973	0.8583	-1.8051	0.3436	0.0206	0.0113
M	0.0025	-0.0472	-0.2218	-0.0008	0.1638	0.0348	-0.0205	-0.0721	-0.0030	0.0181
Y	0.0052	-0.0288	-0.4927	-0.1062	-0.1300	0.5218	-0.0502	0.0227	0.1255	0.2317
L'	-0.0076	-0.0216	-0.9553	-0.0490	-0.4110	0.1426	0.0331	0.0349	0.2359	0.1922
N'	-0.0228	0.0418	-0.1438	0.0428	-0.5298	-1.0505	0.3342	-0.0150	0.0121	-0.3549

CASE 70 100 KT 11 M/S SEA LEVEL 3629 KG MID CG

PHI	THETA	PSI	ALPHA	BETA	GAMMA	OMR	B1S	A1S	OTR
-1.92	-1.04	0.00	-12.97	0.83	11.93	17.22	5.82	-2.66	6.21

XDOT	ZDOT	UO	VO	WO	VTO
50.33	-10.64	50.13	0.39	-11.58	51.48

	U	W	Q	V	P	R	DC	DB	DA	DP
X	-0.0401	0.0049	0.0852	0.0002	-0.4583	-0.0860	0.0074	0.1526	0.0019	-0.0262
Z	-0.0186	-0.9691	-0.8215	-0.0509	-0.8488	0.4860	-2.0987	0.6538	0.0226	0.0017
M	0.0112	-0.0304	-0.2291	-0.0053	0.1892	0.0753	-0.0226	-0.0722	-0.0011	0.0431
Y	0.0047	-0.0112	-0.5483	-0.1490	-0.1172	0.4041	-0.0107	0.0208	0.1147	0.2215
L'	-0.0051	-0.0291	-1.0096	-0.0488	-0.1952	0.0705	-0.0179	0.0222	0.2186	0.1136
N'	-0.0188	0.0582	-0.0671	0.0802	-0.4177	-1.1259	0.3521	-0.0342	0.0106	-0.4040

TABLE IV-3 CONTINUED
AH-IG STABILITY AND CONTROL DERIVATIVES -- SI UNITS
(BODY-FIXED FRL AXIS SYSTEM)

CASE 71 60 KT -9 M/S SEA LEVEL 3629 KG MID CG

PHI	THETA	PSI	ALPHA	BETA	GAMMA	θMR	B1S	A1S	θTR
-0.03	-3.88	0.00	14.01	-0.01	-17.89	8.69	-1.59	-0.39	-0.70

XDOT	ZDOT	U0	V0	W0	VT0
29.37	9.48	29.95	-0.00	7.47	30.87

	U	W	Q	V	P	R	DC	DB	DA	DP
X	-0.0213	-0.0798	0.8366	-0.0027	-0.4773	-0.0104	-0.1140	0.1512	0.0021	-0.0019
Z	-0.1501	-0.7429	-0.5698	-0.0104	-0.2885	0.3009	-1.7526	0.3224	0.0094	-0.0077
M	0.0047	-0.0187	-0.4218	-0.0012	0.1925	0.0166	0.0289	-0.0584	-0.0011	0.0013
Y	-0.0010	0.0152	-0.3903	-0.1254	-0.9360	0.3464	0.0347	-0.0030	0.0906	0.2102
L'	-0.0099	0.0052	-0.5360	0.0523	-1.8174	0.0115	0.0555	0.0070	0.1753	0.1235
N'	-0.0123	-0.0693	0.4954	0.0498	-0.1969	-0.8372	-0.0251	0.0351	0.0123	-0.3851

CASE 72 100 KT -11 M/S SEA LEVEL 3629 KG MID CG

PHI	THETA	PSI	ALPHA	BETA	GAMMA	θMR	B1S	A1S	θTR
-0.31	-5.09	0.00	7.75	-0.04	-12.84	8.04	-0.57	0.22	-0.89

XDOT	ZDOT	U0	V0	W0	VT0
50.16	11.43	50.97	-0.04	6.94	51.44

	U	W	Q	V	P	R	DC	DB	DA	DP
X	-0.0309	-0.0982	0.8812	-0.0012	-0.4641	-0.0064	-0.1434	0.1487	-0.0002	0.0015
Z	-0.0968	-0.9793	-1.1576	0.0052	-0.6000	0.1984	-2.0708	0.6436	0.0168	-0.0186
M	0.0039	-0.0099	-0.5269	-0.0025	0.1817	0.0106	0.0264	-0.0539	-0.0002	-0.0040
Y	0.0022	0.0187	-0.3727	-0.1615	-0.9219	0.4592	0.0404	-0.0090	0.0810	0.2319
L'	-0.0028	-0.0018	-0.5511	0.0465	-1.7892	-0.0033	0.0350	0.0114	0.1584	0.1287
N'	-0.0041	-0.0924	0.3339	0.0477	-0.1395	-1.0996	-0.1129	0.0765	0.0125	-0.4380

CASE 73 6 KT -3 M/S SEA LEVEL 3629 KG MID CG

PHI	THETA	PSI	ALPHA	BETA	GAMMA	θMR	B1S	A1S	θTR
-0.95	-1.26	0.00	88.74	-0.95	-90.00	14.23	-1.19	-1.43	7.20

XDOT	ZDOT	U0	V0	W0	VT0
0.00	3.05	0.07	-0.05	3.05	3.05

	U	W	Q	V	P	R	DC	DB	DA	DP
X	-0.0215	-0.0076	0.3198	-0.0258	-0.5359	-0.0528	-0.0300	0.1594	0.0071	0.0090
Z	-0.0979	-0.3400	-0.0978	-0.0945	-0.0136	0.5952	-1.5353	0.0136	-0.0036	-0.0137
M	0.0058	-0.0106	-0.2846	0.0036	0.2190	-0.0012	-0.0012	-0.0642	-0.0017	-0.0086
Y	0.0251	0.0003	-0.4568	-0.0493	-0.3172	0.2471	-0.0360	0.0075	0.1101	0.1891
L'	0.0335	-0.0079	-0.8815	-0.0231	-0.7299	0.0440	0.0124	0.0141	0.2103	0.1489
N'	-0.0097	-0.0196	-0.0011	0.0490	-0.2962	-0.4913	0.2134	0.0005	0.0154	-0.2951

TABLE IV-3 CONTINUED
AH-IG STABILITY AND CONTROL DERIVATIVES -- SI UNITS
(BODY-FIXED FRL AXIS SYSTEM)

CASE 74 12 KT -6 M/S SEA LEVEL 3629 KG MID CG

PHI	THETA	PSI	ALPHA	BETA	GAMMA	OMR	B1S	A1S	OTR
-0.79	-1.72	0.00	88.28	-0.79	-90.00	13.66	-1.65	-1.26	6.02

XDOT	ZDOT	UO	VO	WO	VTO
0.00	6.10	0.18	-0.08	6.09	6.10

	U	W	Q	V	P	R	DC	DB	DA	DP
X	-0.0287	-0.0090	0.3300	-0.0313	-0.5606	-0.0581	-0.0476	0.1528	0.0048	0.0023
Z	-0.1162	-0.3085	-0.0685	-0.0930	0.0194	0.5778	-1.5225	0.0199	-0.0008	-0.0053
M	0.0110	-0.0110	-0.3153	0.0039	0.2247	0.0058	0.0055	-0.0605	-0.0019	-0.0067
Y	0.0249	0.0038	-0.4595	-0.0507	-0.3747	0.2296	-0.0374	-0.0007	0.1027	0.1641
L'	0.0360	-0.0049	-0.8746	-0.0233	-0.7833	0.0058	0.0033	-0.0015	0.1965	0.1123
N'	-0.0068	-0.0238	0.0529	0.0485	-0.2591	-0.4931	0.1955	-0.0010	0.0142	-0.2831

CASE 75 6 KT 3 M/S SEA LEVEL 3629 KG MID CG

PHI	THETA	PSI	ALPHA	BETA	GAMMA	OMR	B1S	A1S	OTR
-1.35	0.11	0.00	-89.89	1.35	90.00	15.51	-0.04	-1.98	9.28

XDOT	ZDOT	UO	VO	WO	VTO
0.00	-3.05	0.01	0.07	-3.05	3.05

	U	W	Q	V	P	R	DC	DB	DA	DP
X	-0.0170	-0.0038	0.1865	-0.0216	-0.5419	-0.0168	0.0007	0.1593	0.0031	-0.0027
Z	-0.0670	-0.4134	-0.1327	-0.0912	-0.0675	0.6778	-1.5373	0.0188	0.0017	0.0042
M	0.0024	-0.0202	-0.2564	0.0024	0.2187	0.0002	-0.0080	-0.0615	-0.0006	0.0128
Y	0.0136	-0.0207	-0.6276	-0.0623	-0.2601	0.2847	-0.0726	-0.0129	0.1002	0.1621
L'	0.0266	-0.0263	-1.1304	-0.0295	-0.6413	-0.0183	-0.0397	-0.0272	0.1894	0.0768
N'	0.0025	0.0166	0.0139	0.0581	-0.4224	-0.5632	0.2572	-0.0031	0.0134	-0.3258

CASE 76 12 KT 6 M/S SEA LEVEL 3629 KG MID CG

PHI	THETA	PSI	ALPHA	BETA	GAMMA	OMR	B1S	A1S	OTR
-1.56	1.40	0.00	-88.60	1.56	90.00	14.26	1.04	-2.23	10.17

XDOT	ZDOT	UO	VO	WO	VTO
0.00	-6.10	0.15	0.17	-6.09	6.10

	U	W	Q	V	P	R	DC	DB	DA	DP
X	-0.0211	-0.0035	0.1207	-0.0231	-0.5387	-0.0408	0.0364	0.1669	0.0045	0.0008
Z	-0.0555	-0.4638	-0.1468	-0.0939	-0.1535	0.7208	-1.5588	0.0172	0.0008	0.0005
M	0.0013	-0.0122	-0.2790	-0.0002	0.1961	-0.0048	-0.0219	-0.0455	-0.0021	0.0142
Y	0.0124	-0.0249	-0.6230	-0.0710	-0.1617	0.3100	-0.0711	-0.0025	0.1100	0.1908
L'	0.0262	-0.0246	-1.1700	-0.0296	-0.6661	0.0514	-0.0214	-0.0043	0.2088	0.1277
N'	0.0047	0.0294	-0.1622	0.0481	-0.4474	-0.6107	0.2919	-0.0031	0.0151	-0.3296

MICROFILMED FROM
BEST AVAILABLE COPY

TABLE IV-3 CONTINUED
AH-1G STABILITY AND CONTROL DERIVATIVES -- SI UNITS
(BODY-FIXED FRL AXIS SYSTEM)

CASE 77 60 KT 6 M/S SEA LEVEL 3629 KG MID CG

PHI	THETA	PSI	ALPHA	BETA	GAMMA	OMP	B1S	A1S	OTP
-1.21	-1.04	0.00	-12.42	0.26	11.39	14.78	2.04	-2.36	5.04

XDOT	ZDOT	UO	VO	WO	VTO
30.26	-6.30	30.14	0.14	-6.64	30.87

	U	W	Q	V	P	R	DC	DB	DA	DP
X	-0.0288	-0.0168	0.2743	-0.0039	-0.4842	-0.0443	-0.0395	0.1617	0.0030	-0.0086
Z	-0.0801	-0.8255	-0.4093	-0.0383	-0.4662	0.6979	-1.8102	0.3566	0.0139	-0.0009
M	0.0078	-0.0176	-0.2821	-0.0005	0.1762	0.0271	0.0005	-0.0658	-0.0015	0.0129
Y	0.0019	-0.0148	-0.4824	-0.1028	-0.3847	0.4821	-0.0346	0.0084	0.1095	0.2053
L'	-0.0097	-0.0172	-0.8093	-0.0365	-0.8628	0.0614	0.0215	0.0148	0.2066	0.1366
N'	-0.0184	0.0072	0.1767	0.0418	-0.4515	-0.9663	0.2267	-0.0012	0.0113	-0.3614

CASE 78 60 KT 3 M/S SEA LEVEL 3629 KG MID CG

PHI	THETA	PSI	ALPHA	BETA	GAMMA	OMP	B1S	A1S	OTP
-0.94	-1.73	0.00	-7.40	0.12	5.67	13.62	1.33	-1.96	3.66

XDOT	ZDOT	UO	VO	WO	VTO
30.72	-3.05	30.61	0.06	-3.98	30.87

	U	W	Q	V	P	R	DC	DB	DA	DP
X	-0.0280	-0.0237	0.4042	-0.0044	-0.4830	-0.0326	-0.0614	0.1604	0.0027	-0.0068
Z	-0.0940	-0.8305	-0.4206	-0.0315	-0.4538	0.6115	-1.8041	0.3590	0.0114	-0.0052
M	0.0073	-0.0124	-0.2838	-0.0001	0.1793	0.0234	0.0060	-0.0641	-0.0014	0.0088
Y	0.0009	-0.0083	-0.4573	-0.1011	-0.5056	0.4172	-0.0207	0.0065	0.1053	0.2067
L'	-0.0104	-0.0159	-0.7398	-0.0267	-1.0780	0.0441	0.0257	0.0142	0.1994	0.1355
N'	-0.0169	-0.0118	0.2835	0.0453	-0.4142	-0.9314	0.1692	0.0070	0.0108	-0.3653

CASE 79 60 KT -3 M/S SEA LEVEL 3629 KG MID CG

PHI	THETA	PSI	ALPHA	BETA	GAMMA	OMP	B1S	A1S	OTP
-0.86	-2.68	0.00	2.98	-0.02	-5.67	11.21	0.87	-1.14	1.24

XDOT	ZDOT	UO	VO	WO	VTO
30.72	3.05	30.83	-0.01	1.61	30.87

	U	W	Q	V	P	R	DC	DB	DA	DP
X	-0.0260	-0.0300	0.6492	-0.0048	-0.4782	-0.0154	-0.0902	0.1569	0.0027	-0.0067
Z	-0.1176	-0.8387	-0.4616	-0.0382	-0.4032	0.4926	-1.7805	0.3553	0.0098	-0.0050
M	0.0055	-0.0096	-0.3684	-0.0003	0.1836	0.0167	0.0133	-0.0608	-0.0014	0.0086
Y	-0.0003	0.0055	-0.4219	-0.1056	-0.7127	0.1734	0.0098	0.0085	0.0948	0.2016
L'	-0.0108	-0.0050	-0.6538	-0.0015	-1.4710	0.0172	0.0434	0.0091	0.1854	0.1181
N'	-0.0161	-0.0422	0.1274	0.0470	-0.3081	-0.8757	0.0674	0.0211	0.0114	-0.3802

TABLE IV-3 CONTINUED
AH-1G STABILITY AND CONTROL DERIVATIVES -- SI UNITS
(BODY-FIXED FRL AXIS SYSTEM)

CASE 80 60 KT -6 M/S SEA LEVEL 3629 KG MID CG

PHI	THETA	PSI	ALPHA	BETA	GAMMA	OMR	B1S	A1S	OTR
-0.25	-3.13	0.00	8.27	-0.04	-11.39	9.96	-0.70	-0.75	0.24

XDOT	ZDOT	UO	VO	WO	VTO
30.26	6.10	30.55	-0.02	4.44	30.87

	U	W	Q	V	P	R	DC	DB	DA	DP
X	-0.0253	-0.0331	0.7384	-0.0041	-0.4851	-0.0124	-0.1078	0.1533	0.0019	-0.0033
Z	-0.1298	-0.8280	-0.5030	-0.0127	-0.3445	0.3536	-1.7612	0.3412	0.0087	-0.0088
M	0.0043	-0.0382	-0.3987	-0.0007	0.1904	0.0161	0.0187	-0.0584	-0.0009	0.0024
Y	-0.0009	0.0115	-0.4009	-0.1127	-0.8263	0.3538	0.0232	-0.0015	0.0931	0.2115
L'	-0.0102	-0.0005	-0.5895	0.0157	-1.6257	0.0040	0.0511	0.0076	0.1790	0.1256
N'	-0.0128	-0.0569	0.3971	0.0468	-0.2420	-0.9574	0.0205	0.0290	0.0115	-0.3866

CASE 81 1 KT LEVEL FLIGHT 3048 M 3629 KG MID CG

PHI	THETA	PSI	ALPHA	BETA	GAMMA	OMR	B1S	A1S	OTR
-1.35	-0.60	0.00	-0.60	0.01	0.00	16.64	-0.63	-2.06	11.76

XDOT	ZDOT	UO	VO	WO	VTO
0.51	0.00	0.51	0.00	-0.01	0.51

	U	W	Q	V	P	R	DC	DB	DA	DP
X	-0.0197	-0.0145	0.2069	-0.0295	-0.5744	-0.0318	-0.0219	0.1526	-0.0015	-0.0167
Z	-0.0843	-0.2994	0.0096	-0.0681	-0.0251	0.6354	-1.2086	0.0179	-0.0020	-0.0083
M	0.0040	-0.0119	-0.2759	0.0045	0.2324	0.0041	0.0016	-0.0591	0.0012	0.0125
Y	0.0199	-0.0038	-0.4806	-0.0521	-0.4206	0.1926	-0.0576	-0.0098	0.1017	0.1328
L'	0.0354	-0.0148	-1.0302	-0.0341	-0.9499	-0.0361	-0.0169	-0.0179	0.1942	0.0745
N'	-0.0004	-0.0101	-0.1093	0.0435	-0.4646	-0.4977	0.2372	-0.0034	0.0130	-0.2611

CASE 82 60 KT LEVEL FLIGHT 3048 M 3629 KG MID CG

PHI	THETA	PSI	ALPHA	BETA	GAMMA	OMR	B1S	A1S	OTR
-0.76	-2.06	0.00	-2.06	0.03	0.00	14.02	1.15	-1.98	4.00

XDOT	ZDOT	UO	VO	WO	VTO
30.87	0.00	30.85	0.01	-1.11	30.87

	U	W	Q	V	P	R	DC	DB	DA	DP
X	-0.0272	-0.0242	0.6272	-0.0054	-0.4571	-0.0247	-0.0744	0.1587	0.0017	-0.0093
Z	-0.0971	-0.6037	-0.5072	-0.0233	-0.3141	0.5297	-1.3198	0.2594	0.0074	-0.0108
M	0.0072	-0.0065	-0.3424	0.0008	0.1722	0.0135	0.0158	-0.0634	-0.0009	0.0078
Y	-0.0010	0.0027	-0.4259	-0.0915	-0.7077	0.3137	-0.0052	0.0009	0.1019	0.1563
L'	-0.0119	0.0001	-0.6111	-0.0228	-1.4781	-0.0261	0.0443	0.0058	0.1941	0.1062
N'	-0.0146	-0.3149	0.4011	0.0335	-0.4491	-0.7143	0.1561	0.0097	0.0114	-0.2715

TABLE IV-3 CONTINUED
AH-1G STABILITY AND CONTROL DERIVATIVES -- SI UNITS
(BODY-FIXED FRL AXIS SYSTEM)

CASE 83 100 KT LEVEL FLIGHT 3048 M 3629 KG MID CG

PHI	THETA	PSI	ALPHA	BETA	GAMMA	OMR	B1S	A1S	OTR
-0.98	-2.95	0.00	-2.95	0.05	0.00	18.36	3.43	-1.59	3.38

XDOT	ZDOT	DD	VD	WD	VTO
51.44	0.00	51.38	0.05	-2.65	51.44

	U	V	Q	V	P	R	DC	DB	DA	DP
X	-0.0319	-0.0206	0.5944	-0.0016	-0.4574	-0.0286	-0.0795	0.1587	0.0013	-0.0147
Z	-0.0480	-0.7030	-1.0552	-0.0186	-0.5019	0.5696	-1.5098	0.4825	0.0158	-0.0078
M	0.0083	-0.0119	-0.3795	-0.0019	0.1658	0.0309	0.0136	-0.0673	-0.0007	0.0167
Y	0.0024	-0.0044	-0.4430	-0.1129	-0.5456	0.3891	-0.0138	0.0064	0.1018	0.1739
L'	-0.0041	-0.0068	-0.7019	-0.0161	-1.2258	-0.0109	0.0366	0.0175	0.1948	0.1101
N'	-0.0082	-0.0025	0.2559	0.0356	-0.3518	-0.9469	0.1660	0.0139	0.0129	-0.3112

CASE 84 12 KT 6 M/S 3048 M 3629 KG MID CG

PHI	THETA	PSI	ALPHA	BETA	GAMMA	OMR	B1S	A1S	OTR
-1.79	1.61	0.00	-88.39	1.79	90.00	18.06	1.23	-2.46	18.25

XDOT	ZDOT	DD	VD	WD	VTO
0.00	-6.10	0.17	0.19	-6.09	6.10

	U	V	Q	V	P	R	DC	DB	DA	DP
X	-0.0200	0.0033	0.2204	-0.0206	-0.5473	-0.0305	0.0338	0.1690	0.0043	0.0105
Z	-0.0381	-0.3540	-0.0896	-0.0720	-0.0865	0.6973	-1.2147	0.0169	0.0005	0.0077
M	0.0049	-0.0304	-0.3198	0.0012	0.2091	-0.0367	-0.0208	-0.0680	-0.0031	0.0172
Y	0.0159	-0.0175	-0.5582	-0.0628	-0.2196	0.2083	-0.0485	0.0128	0.1214	0.1503
L'	0.0338	-0.0185	-1.0833	-0.0340	-0.6154	0.0764	0.0206	0.0210	0.2303	0.1513
N'	0.0066	0.0220	-0.2223	0.0511	-0.5563	-0.4923	0.2968	-0.0017	0.0149	-0.1866

CASE 85 60 KT 9 M/S 3048 M 3629 KG MID CG

PHI	THETA	PSI	ALPHA	BETA	GAMMA	OMR	B1S	A1S	OTR
-1.68	1.20	0.00	-14.84	0.43	16.05	17.31	4.46	-3.14	15.61

XDOT	ZDOT	DD	VD	WD	VTO
29.64	-8.53	29.84	0.23	-7.91	30.87

	U	V	Q	V	P	R	DC	DB	DA	DP
X	-0.0251	0.0049	0.3165	-0.0066	-0.5095	-0.1072	0.0093	0.1610	0.0020	-0.0129
Z	-0.0507	-0.5805	-0.5959	-0.0381	-0.1356	0.7015	-1.2998	0.2545	0.0115	-0.0020
M	0.0075	-0.0738	-0.2683	0.0003	0.2257	0.0584	-0.0124	-0.0675	-0.0011	0.0255
Y	-0.0041	-0.0091	-0.4987	-0.0720	-0.2942	0.2892	-0.0127	0.0094	0.1111	0.1049
L'	-0.0123	-0.0019	-0.9597	-0.0191	-0.8144	0.0507	0.0469	0.0100	0.2125	0.0886
N'	-0.0048	0.0238	-0.1614	0.0013	-0.6588	-0.7096	0.2917	-0.0111	0.0106	-0.1561

TABLE IV-3 CONTINUED
AH-1G STABILITY AND CONTROL DERIVATIVES -- SI UNITS
(BODY-FIXED FRL AXIS SYSTEM)

CASE 86 60 KT -8 M/S 3048 M 3629 KG MID CG

PHI	THETA	PSI	ALPHA	BETA	GAMMA	OMR	B1S	A1S	OTR
-0.12	-3.05	0.00	12.88	-0.03	-15.93	10.67	-0.63	-0.92	-0.17

XDOT	ZDOT	UO	VO	WO	VTO
29.68	8.47	30.09	-0.01	6.98	30.87

	U	W	Q	V	P	R	DC	DB	DA	DP
X	-0.0243	-0.0527	0.8905	-0.0059	-0.4583	-0.0041	-0.0991	0.1540	0.0030	-0.0015
Z	-0.1226	-0.5194	-0.5896	-0.0102	-0.1634	0.3934	-1.2591	0.2298	0.0082	-0.0050
M	0.0048	-0.0079	-0.4325	-0.0000	0.1845	0.0141	0.0214	-0.0597	-0.0013	0.0012
Y	-0.0028	0.0115	-0.3871	-0.0951	-0.9727	0.2487	0.0215	-0.0018	0.0947	0.1639
L'	-0.0123	0.0057	-0.5245	0.0158	-1.9330	-0.0269	0.0590	0.0051	0.1829	0.1047
N'	-0.0117	-0.0426	0.5228	0.0138	-0.3072	-0.6504	0.0516	0.0228	0.0126	-0.2887

CASE 87 100 KT -9 M/S 3048 M 3629 KG MID CG

PHI	THETA	PSI	ALPHA	BETA	GAMMA	OMR	B1S	A1S	OTR
-0.30	-4.19	0.00	6.05	-0.03	-10.24	10.42	0.88	-0.35	-0.43

XDOT	ZDOT	UO	VO	WO	VTO
50.63	9.14	51.16	-0.03	5.42	51.44

	U	W	Q	V	P	R	DC	DB	DA	DP
X	-0.0292	-0.0308	0.9377	-0.0021	-0.4558	0.0129	-0.1211	0.1541	0.0039	-0.0015
Z	-0.0729	-0.7008	-1.1358	-0.0029	-0.4121	0.3629	-1.5115	0.4630	0.0124	-0.0182
M	0.0056	-0.0076	-0.5121	-0.0014	0.1794	0.0070	0.0272	-0.0608	-0.0006	-0.0014
Y	0.0008	0.0096	-0.3993	-0.1208	-0.9338	0.3426	0.0181	-0.0050	0.0894	0.1800
L'	-0.0043	-0.0034	-0.9066	0.0177	-1.8538	-0.0352	0.0329	0.0089	0.1735	0.1102
N'	-0.0040	-0.0533	-0.5208	0.0340	-0.2471	-0.8685	-0.0034	0.0491	0.0128	-0.3262

CASE 88 1 KT LEVEL FLIGHT AT SEA LEVEL 3629 KG FWD CG

PHI	THETA	PSI	ALPHA	BETA	GAMMA	OMR	B1S	A1S	OTR
-1.10	-4.24	0.00	-4.24	0.08	0.00	14.81	-3.95	-1.75	8.35

XDOT	ZDOT	UO	VO	WO	VTO
0.51	0.00	0.51	0.00	-0.04	0.51

	U	W	Q	V	P	R	DC	DB	DA	DP
X	-0.0260	-0.0363	0.1198	-0.0332	-0.5495	0.0407	-0.1194	0.1544	0.0044	0.0003
Z	-0.1587	-0.3712	0.0164	-0.0900	0.0229	0.6286	-1.5300	0.0223	-0.0009	-0.0042
M	0.0010	-0.0121	-0.2371	0.0017	0.2227	-0.0004	-0.0023	-0.0608	-0.0020	0.0026
Y	0.0170	-0.0042	-0.4622	-0.0539	-0.3058	0.2559	-0.0535	-0.0002	0.1061	0.1817
L'	0.0276	-0.0178	-0.7764	-0.0259	-0.7991	0.0209	-0.0096	0.0004	0.2008	0.1209
N'	-0.0042	-0.0168	0.479	0.0532	-0.3026	-0.5378	0.2335	-0.0022	0.0110	-0.3200

MICROFILMED FROM
BEST AVAILABLE COPY

TABLE IV-3 CONTINUED
AH-1G STABILITY AND CONTROL DERIVATIVES -- SI UNITS
(BODY-FIXED FRL AXIS SYSTEM)

CASE 89 60 KT LEVEL FLIGHT AT SEA LEVEL 3629 KG FWD CG

PHI	THETA	PSI	ALPHA	BETA	GAMMA	OMR	B1S	A1S	OTR
-0.65	-5.41	0.00	-5.41	0.06	0.00	12.47	-2.29	-1.50	2.31

XDOT	ZDOT	UO	VO	WO	VTO
30.87	0.00	30.73	0.03	-2.91	30.87

	U	W	Q	V	P	R	DC	DB	DA	DP
X	-0.0361	-0.0733	0.4329	-0.0058	-0.5109	0.0162	-0.1828	0.1761	0.0045	-0.0060
Z	-0.1438	-0.8313	-0.6008	-0.0228	-0.3655	0.5532	-1.7932	0.3469	0.0128	-0.0037
M	0.0064	-0.0134	-0.3108	-0.0000	0.1854	0.0197	0.0077	-0.0582	-0.0017	0.0067
Y	0.0001	-0.0027	-0.4333	-0.1002	-0.6262	0.4114	-0.0047	0.0035	0.1021	0.2052
L'	-0.0115	-0.0087	-0.4516	-0.0191	-1.2817	0.0264	0.0383	0.0141	0.1936	0.1288
N'	-0.0178	-0.0287	0.8603	0.0501	-0.3357	-0.9392	0.1203	0.0170	0.0090	-0.3737

CASE 90 100 KT LEVEL FLIGHT AT SEA LEVEL 3629 KG FWD CG

PHI	THETA	PSI	ALPHA	BETA	GAMMA	OMR	B1S	A1S	OTR
-0.94	-5.94	0.00	-5.94	0.10	0.00	13.15	0.54	-1.22	1.94

XDOT	ZDOT	UO	VO	WO	VTO
51.44	0.00	51.17	0.09	-5.32	51.44

	U	W	Q	V	P	R	DC	DB	DA	DP
X	-0.0399	-0.0657	0.3874	-0.0034	-0.5206	-0.0070	-0.1811	0.1816	0.0015	-0.0174
Z	-0.0873	-0.9866	-1.2603	-0.0203	-0.7307	0.5894	-2.1078	0.6423	0.0191	-0.0278
M	0.0091	-0.0269	-0.3815	-0.0023	0.1741	0.0414	-0.0063	-0.0551	-0.0006	0.0128
Y	0.0028	-0.0102	-0.4328	-0.1426	-0.5301	0.5674	-0.0148	0.0156	0.1077	0.2428
L'	-0.0057	-0.0227	-0.5079	-0.0130	-1.0940	0.0482	0.0190	0.0408	0.2045	0.1628
N'	-0.0122	-0.0257	0.6521	0.0533	-0.2990	-1.2517	0.1145	0.0248	0.0085	-0.4289

CASE 91 1 KT LEVEL FLIGHT AT SEA LEVEL 3629 KG AFT CG

PHI	THETA	PSI	ALPHA	BETA	GAMMA	OMR	B1S	A1S	OTR
-1.19	3.43	0.00	3.43	-0.07	0.00	14.82	3.07	-1.75	8.44

XDOT	ZDOT	UO	VO	WO	VTO
0.51	0.00	0.51	-0.00	0.03	0.51

	U	W	Q	V	P	R	DC	DB	DA	DP
X	-0.0100	0.0107	0.1447	-0.0158	-0.5102	-0.0756	0.0937	0.1625	0.0036	-0.0009
Z	-0.0756	-0.3717	-0.0249	-0.0948	-0.1174	0.6274	-1.5304	0.0215	0.0001	-0.0034
M	0.0013	-0.0102	-0.2542	0.0029	0.2169	0.0091	-0.0016	-0.0645	-0.0016	0.0034
Y	0.0199	-0.0033	-0.4540	-0.0542	-0.1095	0.2412	-0.0501	-0.0099	0.1059	0.1814
L'	0.0328	-0.0166	-1.2631	-0.0267	-0.7122	0.0152	-0.0105	-0.0044	0.2031	0.1245
N'	-0.0029	-0.0151	-0.8258	0.0502	-0.1707	-0.5093	0.2288	-0.0099	0.0178	-0.1008

TABLE IV-3 CONTINUED
AH-1G STABILITY AND CONTROL DERIVATIVES -- SI UNITS
(BODY-FIXED FRL AXIS SYSTEM)

CASE 92 60 KT LEVEL FLIGHT AT SEA LEVEL 3629 KG AFT CG

PHI	THETA	PSI	ALPHA	BETA	GAMMA	ORD	B1S	A1S	OTR
-0.74	1.35	0.00	1.35	-0.02	0.00	12.37	4.20	-1.58	2.47

XDOT	ZDOT	UO	VO	WO	VTO
30.87	0.00	30.86	-0.01	0.72	30.87

	U	W	Q	V	P	R	DC	DB	DA	DP
X	-0.0223	0.0239	0.6044	-0.0029	-0.4534	-0.0659	0.3435	0.1373	0.0018	-0.0066
Z	-0.0612	-0.8430	-0.2223	-0.0264	-0.5024	0.4910	-1.7909	0.3754	0.0111	-0.0065
M	0.0058	-0.0057	-0.3416	-0.0000	0.1846	0.0208	0.0141	-0.0674	-0.0011	0.0062
Y	0.0007	-0.0010	-0.4248	-0.1049	-0.6155	0.3783	-0.0040	0.0049	0.1013	0.2078
L'	-0.0089	-0.0113	-0.9038	-0.0093	-1.2649	0.0400	0.0363	0.0132	0.1969	0.1338
N'	-0.0127	-0.0274	-0.3376	0.0432	-0.3647	-0.0571	0.1188	0.0160	0.0161	-0.1650

CASE 93 100 KT LEVEL FLIGHT AT SEA LEVEL 3629 KG AFT CG

PHI	THETA	PSI	ALPHA	BETA	GAMMA	ORD	B1S	A1S	OTR
-1.07	-0.49	0.00	-0.49	0.01	0.00	13.00	5.99	-1.38	2.16

XDOT	ZDOT	UO	VO	WO	VTO
51.44	0.00	51.44	0.01	-0.44	51.44

	U	W	Q	V	P	R	DC	DB	DA	DP
X	-0.0350	0.0314	0.5830	-0.0004	-0.4126	-0.0612	0.0565	0.1147	0.0018	-0.0122
Z	-0.0103	-0.9939	-0.5691	-0.0232	-0.8249	0.5293	-2.1038	0.7097	0.0197	0.0061
M	0.0067	-0.0102	-0.3890	-0.0021	0.1727	0.0291	0.0133	-0.0763	-0.0011	0.0125
Y	0.0043	-0.0138	-0.4355	-0.1483	-0.5110	0.5113	-0.0242	0.0133	0.0985	0.2305
L'	-0.0023	-0.0299	-0.9355	-0.0012	-1.0696	0.0450	-0.0044	0.0308	0.1903	0.1387
N'	-0.0083	-0.0289	-0.4081	0.0437	-0.3316	-0.1324	0.1095	0.0239	0.0161	-0.4168

CASE 94 1 KT LEVEL FLIGHT AT SEA LEVEL 2948 KG MID CG

PHI	THETA	PSI	ALPHA	BETA	GAMMA	ORD	B1S	A1S	OTR
-1.15	-0.82	0.00	-0.92	0.02	0.00	13.79	-0.83	-1.56	6.85

XDOT	ZDOT	UO	VO	WO	VTO
0.51	0.00	0.51	0.00	-0.01	0.51

	U	W	Q	V	P	R	DC	DB	DA	DP
X	-0.0147	-0.0158	0.0644	-0.0277	-0.6082	-0.0104	-0.0284	0.1561	0.0035	0.0010
Z	-0.1529	-0.4197	0.0021	-0.1140	-0.0605	0.6235	-1.4039	0.0212	-0.0001	-0.0030
M	-0.0004	-0.0104	-0.1985	-0.0005	0.2075	0.0049	-0.0016	-0.0519	-0.0011	0.0027
Y	0.0174	-0.0038	-0.5219	-0.0574	-0.2189	0.2804	-0.0540	-0.0095	0.1048	0.2012
L'	0.0243	-0.0197	-1.0956	-0.0136	-0.5845	-0.0279	0.0031	-0.0014	0.1987	0.0836
N'	-0.0045	-0.0161	-0.1075	0.0541	-0.1711	-0.5206	0.2168	-0.0209	0.0154	-0.1305

TABLE IV-3 CONTINUED
AH-1G STABILITY AND CONTROL DERIVATIVES -- SI UNITS
(BODY-FIXED FRL AXIS SYSTEM)

CASE 95 60 KT LEVEL FLIGHT AT SEA LEVEL 2948 KG MID CG

PHI	THETA	PSI	ALPHA	BETA	GAMMA	ORR	B1S	A1S	QTR
-0.77	-2.52	0.00	-2.52	0.03	0.00	11.59	0.46	-1.12	1.86

XDOT	ZDOT	UO	VO	WO	VTO
30.87	0.00	30.84	0.02	-1.36	30.87

	U	W	Q	V	P	R	DC	DB	DA	DP
X	-0.0288	-0.0302	0.5240	-0.0043	-0.5618	-0.0180	-0.0789	0.1580	0.0027	-0.0056
Z	-0.1126	-1.0366	-0.5619	-0.0261	-0.5089	0.5379	-2.2134	0.8465	0.0126	-0.0064
M	0.0051	-0.0127	-0.2998	-0.0006	0.1779	0.0182	0.0028	-0.0511	-0.0010	0.0057
Y	0.0018	-0.0026	-0.5163	-0.1213	-0.6071	0.5025	-0.0066	0.0043	0.1013	0.2468
L'	-0.0101	-0.0158	-0.7834	0.0066	-1.2169	-0.0371	0.0354	0.0138	0.1841	0.0931
N'	-0.0140	-0.0275	0.2231	0.0553	-0.3595	-1.0001	0.1025	0.0150	0.0137	-0.0171

CASE 96 100 KT LEVEL FLIGHT AT SEA LEVEL 2948 KG MID CG

PHI	THETA	PSI	ALPHA	BETA	GAMMA	ORR	B1S	A1S	QTR
-1.21	-3.85	0.00	-3.85	0.08	0.00	12.50	3.02	-1.24	1.78

XDOT	ZDOT	UO	VO	WO	VTO
51.44	0.00	51.33	0.07	-3.46	51.44

	U	W	Q	V	P	R	DC	DB	DA	DP
X	-0.0396	-0.0112	0.4763	-0.0023	-0.5239	-0.0314	-0.0435	0.1048	0.0002	-0.0159
Z	-0.0496	-1.2222	-1.0935	-0.0256	-0.9322	0.5971	-2.5974	0.8881	0.0179	-0.0016
M	0.0078	-0.0260	-0.3583	-0.0025	0.1610	0.0348	-0.0134	-0.0489	0.0002	0.0143
Y	0.0044	-0.0172	-0.5319	-0.1745	-0.6697	0.6679	-0.0334	0.0172	0.0989	0.2673
L'	-0.0046	-0.0332	-0.9128	0.0200	-0.9891	-0.0824	-0.0038	0.0279	0.1801	0.0801
N'	-0.0088	-0.0166	-0.0462	0.0584	-0.3602	-1.3244	0.1190	0.0172	0.0139	-0.0778

CASE 97 1 KT LEVEL FLIGHT AT SEA LEVEL 2948 KG FWD CG

PHI	THETA	PSI	ALPHA	BETA	GAMMA	ORR	B1S	A1S	QTR
-1.10	-5.18	0.00	-5.18	0.10	0.00	13.76	-4.90	-1.55	6.79

XDOT	ZDOT	UO	VO	WO	VTO
0.51	0.00	0.51	0.00	-0.05	0.51

	U	W	Q	V	P	R	DC	DB	DA	DP
X	-0.0318	-0.0478	0.0481	-0.0358	-0.6148	0.0524	-0.1719	0.1529	0.0039	0.0016
Z	-0.2094	-0.4371	0.0394	-0.1106	0.0296	0.6213	-1.8807	0.0242	0.0000	-0.0016
M	-0.0006	-0.0112	-0.1919	-0.0007	0.2114	0.0085	-0.0014	-0.0505	-0.0014	0.0025
Y	0.0157	-0.0042	-0.5271	-0.0572	-0.7425	0.2649	-0.0557	-0.0002	0.1045	0.2006
L'	0.0213	-0.0199	-0.6922	-0.0128	-0.5956	-0.0299	0.0044	0.0037	0.1886	0.0801
N'	-0.0051	-0.0153	0.7407	0.0556	-0.1759	-0.5348	0.2201	-0.0018	0.0124	-0.1162

TABLE IV-3 CONTINUED
AH-IG STABILITY AND CONTROL DERIVATIVES -- SI UNITS
(BODY-FIXED FRL AXIS SYSTEM)

CASE 98 60 KT LEVEL FLIGHT AT SEA LEVEL 2948 KG FWD CG

PHI	THETA	PSI	ALPHA	BETA	GAMMA	OMR	R1S	A1S	OTR
-0.72	-6.38	0.00	-6.38	0.09	0.00	11.64	-3.26	-1.27	1.78

XDOT	ZDOT	UO	VO	WO	VTO
30.87	0.00	30.68	0.04	-3.43	30.87

	U	W	Q	V	P	R	DC	DB	DA	DP
X	-0.0418	-0.0984	0.3980	-0.0058	-0.5929	0.0290	-0.2374	0.1856	0.0039	-0.0077
Z	-0.1714	-1.0271	-0.8161	-0.0237	-0.4115	0.5619	-2.2096	0.4294	0.0132	-0.0013
M	0.0050	-0.0175	-0.2891	-0.0006	0.1788	0.0181	-0.0011	-0.0462	-0.0012	0.0066
Y	0.0005	-0.0029	-0.5224	-0.1190	-0.6168	0.5214	-0.0073	0.0028	0.1008	0.2396
L'	-0.0125	-0.0137	-0.4275	0.0001	-1.2321	-0.0611	0.0358	0.0127	0.1809	0.0783
N'	-0.0166	-0.0272	0.9923	0.0583	-0.3435	-1.0569	0.1039	0.0151	0.0091	-0.4270

CASE 99 28 KT 14 M/S SEA LEVEL 2948 KG FWD CG

PHI	THETA	PSI	ALPHA	BETA	GAMMA	OMR	R1S	A1S	OTR
-2.30	4.79	0.00	-85.21	2.29	90.00	17.69	3.40	-2.88	10.88

XDOT	ZDOT	UO	VO	WO	VTO
0.00	-14.46	1.21	0.58	-14.40	14.46

	U	W	Q	V	P	R	DC	DB	DA	DP
X	-0.0413	0.0283	-0.2726	-0.0019	-0.5927	-0.0916	0.1385	0.1899	0.0036	-0.0006
Z	-0.0481	-0.7525	-0.3760	-0.1037	-0.2983	0.9863	-1.9898	0.0326	0.0097	0.0140
M	-0.0155	-0.0927	-0.3153	-0.0022	0.1687	0.0058	-0.1026	-0.0599	-0.0013	0.0335
Y	0.0056	-0.0488	-0.7715	-0.1177	0.2163	0.4979	-0.1158	-0.0028	0.1229	0.2362
L'	0.0222	-0.0367	-1.5663	-0.0147	0.1288	0.0435	-0.0201	-0.0099	0.2184	0.0996
N'	0.0104	0.0776	-0.5611	0.0996	-0.5722	-0.8814	0.4043	0.0001	0.0132	-0.3847

CASE 100 60 KT 15 M/S SEA LEVEL 2948 KG FWD CG

PHI	THETA	PSI	ALPHA	BETA	GAMMA	OMR	R1S	A1S	OTR
-2.22	-1.32	0.00	-29.59	1.10	28.29	17.33	2.59	-3.28	8.03

XDOT	ZDOT	UO	VO	WO	VTO
27.19	-14.63	26.84	0.59	-15.24	30.87

	U	W	Q	V	P	R	DC	DB	DA	DP
X	-0.0114	0.0274	-0.1798	-0.0049	-0.5708	-0.0358	-0.0170	0.1811	0.0038	-0.0129
Z	-0.0454	-1.0120	-0.5692	-0.0649	-0.5506	1.0621	-2.2419	0.3954	0.0260	0.0151
M	0.0091	-0.0844	-0.3912	-0.0012	0.1516	0.0575	-0.0677	-0.0487	0.0000	0.0317
Y	0.0057	-0.0399	-0.6656	-0.1255	0.1211	0.4617	-0.1039	0.0047	0.1189	0.2276
L'	-0.0129	-0.0311	-1.1296	-0.0471	-0.0881	-0.0455	0.0059	-0.0059	0.2093	0.0772
N'	-0.0227	0.0742	0.0411	0.0918	-0.6191	-1.2807	0.4084	-0.0267	0.0095	-0.4041

MICROFILMED FROM
BEST AVAILABLE COPY

TABLE IV-3 CONTINUED
AH-1G STABILITY AND CONTROL DERIVATIVES -- SI UNITS
(BODY-FIXED FRL AXIS SYSTEM)

CASE 101 90 KT -15 M/S SEA LEVEL 2948 KG FWD CG

PHI	THETA	PSI	ALPHA	BETA	GAMMA	GRP	B1S	A1S	GTR
-0.05	-6.52	0.00	83.48	-0.05	-90.00	9.39	-6.42	-0.29	0.28

XDOT	ZDOT	UO	VO	WO	VTO
0.00	15.24	1.73	-0.01	15.14	15.24

	U	W	Q	V	P	R	DC	DR	DA	DP
X	-0.0340	-0.0794	0.4964	-0.0024	-0.5631	0.0492	-0.1902	0.1379	0.0035	0.0067
Z	-0.0152	-0.7049	-0.4806	0.0477	0.1248	-0.2666	-1.4979	0.0074	0.0010	-0.0041
M	0.0003	0.0006	-0.2341	-0.0170	0.1966	-0.0270	0.0029	-0.0465	-0.0012	-0.0065
Y	0.0216	0.0017	-0.5648	-0.0914	-0.6676	0.5733	-0.0011	0.0028	0.0935	0.1396
L'	0.0330	-0.0103	-0.4762	0.0021	-1.2141	-0.1852	0.0265	0.0058	0.1711	0.0960
N'	-0.0045	-0.0290	1.1709	0.0933	-0.1035	-1.1199	0.0611	0.0016	0.0118	-0.2311

CASE 102 60 KT -9 M/S SEA LEVEL 2948 KG FWD CG

PHI	THETA	PSI	ALPHA	BETA	GAMMA	GRP	B1S	A1S	GTR
-0.10	-8.02	0.00	8.03	-0.01	-16.05	8.10	-6.06	-0.20	-0.50

XDOT	ZDOT	UO	VO	WO	VTO
29.66	8.53	30.56	-0.01	4.31	30.87

	U	W	Q	V	P	R	DC	DR	DA	DP
X	-0.0469	-0.1221	0.7404	-0.0035	-0.5764	0.0312	-0.3248	0.1799	0.0025	-0.0040
Z	-0.2211	-1.0036	-0.9710	-0.0054	-0.2606	0.2697	-2.1579	0.3887	0.0093	-0.0122
M	0.0023	-0.0079	-0.3930	-0.0015	0.1871	0.0099	0.0240	-0.0425	-0.0007	0.0018
Y	0.0089	0.0187	-0.4699	-0.1335	-0.9925	0.4637	0.0379	-0.0053	0.0879	0.2487
L'	-0.0103	-0.0031	-0.2019	0.0491	-1.8272	-0.0631	0.0416	0.0075	0.1606	0.0785
N'	-0.0178	-0.0755	1.1448	0.0592	-0.1761	-0.9048	-0.0551	0.0376	0.0100	-0.4395

CASE 103 1 KT LEVEL FLIGHT AT SEA LEVEL 2948 KG AFT CG

PHI	THETA	PSI	ALPHA	BETA	GAMMA	GRP	B1S	A1S	GTR
-1.19	3.59	0.00	3.59	-0.07	0.00	11.79	3.27	-1.56	6.88

XDOT	ZDOT	UO	VO	WO	VTO
0.51	0.00	0.51	-0.00	0.03	0.51

	U	W	Q	V	P	R	DC	DR	DA	DP
X	-0.0069	0.0162	0.0836	-0.0142	-0.5935	-0.0798	0.1152	0.1598	0.0020	-0.0030
Z	-0.0957	-0.4385	-0.0279	-0.1161	-0.1488	0.6188	-1.8025	0.0294	0.0035	-0.0019
M	-0.0003	-0.0094	-0.2068	0.0005	0.2055	0.0100	-0.0015	-0.0518	-0.0009	0.0018
Y	0.0192	-0.0032	-0.5127	-0.0572	-0.2357	0.2789	-0.0497	0.0019	0.1043	0.2065
L'	0.0276	-0.0196	-1.4450	-0.0135	-0.5757	-0.0181	0.0087	0.0021	0.1958	0.0985
N'	-0.0018	-0.0142	-0.9536	0.0526	-0.1485	-0.5026	0.2158	0.0002	0.0198	-0.1213

TABLE IV-3 CONTINUED
AH-1G STABILITY AND CONTROL DERIVATIVES -- SI UNITS
(BODY-FIXED FRL AXIS SYSTEM)

CASE 104 60 KT LEVEL FLIGHT AT SEA LEVEL 2948 KG APT CG

PHI	THETA	PSI	ALPHA	BETA	GAMMA	θRR	B1S	A1S	θTR
-0.84	1.18	0.00	1.18	-0.02	0.00	11.55	4.15	-1.38	1.96

XDOT	ZDOT	UO	VO	WO	VTO
30.87	0.00	30.86	-0.01	0.64	30.87

	U	W	Q	V	P	R	DC	DB	DA	DP
X	-0.0281	0.0380	0.6129	-0.0023	-0.5162	-0.0608	0.0793	0.1299	0.0016	-0.0072
Z	-0.0532	-1.0420	-0.2907	-0.0281	-0.5883	0.4851	-2.2069	0.8699	0.0116	-0.0004
M	0.0043	-0.0081	-0.3121	-0.0006	0.1770	0.0172	0.0069	-0.0567	-0.0008	0.0063
Y	0.0028	-0.0036	-0.5076	-0.1250	-0.5940	0.4936	-0.0057	0.0066	0.1003	0.2467
L'	-0.0076	-0.0170	-1.1152	0.0143	-1.1960	-0.0179	0.0361	0.0167	0.1845	0.0945
N'	-0.0113	-0.0255	-0.5378	0.0509	-0.3734	-0.9503	0.1031	0.0157	0.0175	-0.6113

CASE 105 60 KT 16 M/S SEA LEVEL 2948 KG APT CG

PHI	THETA	PSI	ALPHA	BETA	GAMMA	θRR	B1S	A1S	θTR
-2.41	6.33	0.00	-23.83	0.98	30.17	17.28	8.31	-3.32	7.98

XDOT	ZDOT	UO	VO	WO	VTO
26.68	-15.51	28.23	0.53	-12.47	30.87

	U	W	Q	V	P	R	DC	DB	DA	DP
X	-0.0306	0.1052	-0.0983	0.0022	-0.4856	-0.1999	0.2403	0.1817	-0.0019	-0.0171
Z	0.0378	-1.0037	-0.3630	-0.0704	-0.7241	0.9708	-2.2366	0.8154	0.0165	-0.0032
M	-0.0010	-0.0580	-0.1403	-0.0010	0.1543	0.0410	-0.0329	-0.0673	-0.0006	0.0263
Y	0.0103	-0.0383	-0.6107	-0.1256	0.1460	0.6272	-0.0905	0.0187	0.1237	0.2516
L'	-0.0067	-0.0274	-1.6197	-0.0429	0.0268	0.0427	0.0192	0.0111	0.2235	0.1248
N'	-0.0302	0.0710	-1.1914	0.0528	-0.5787	-1.1493	0.4012	-0.0296	0.0174	-0.3936

CASE 106 60 KT -9 M/S SEA LEVEL 2948 KG APT CG

PHI	THETA	PSI	ALPHA	BETA	GAMMA	θRR	B1S	A1S	θTR
-0.21	-1.15	0.00	15.49	-0.06	-16.64	8.20	1.72	-0.36	-0.19

XDOT	ZDOT	UO	VO	WO	VTO
29.57	8.84	29.75	-0.03	8.24	30.87

	U	W	Q	V	P	R	DC	DB	DA	DP
X	-0.0170	-0.0192	1.0002	-0.0006	-0.5132	-0.0262	0.0207	0.1286	0.0021	-0.0021
Z	-0.1011	-0.9997	-0.4602	-0.0123	-0.4295	0.2231	-2.1848	0.8348	0.0105	-0.0026
M	0.0052	-0.0164	-0.4188	-0.0019	0.1810	0.0111	0.0357	-0.0550	-0.0010	0.0017
Y	-0.0001	0.0158	-0.6713	-0.1587	-0.5999	0.4344	0.0172	-0.0010	0.0921	0.2565
L'	-0.0088	0.0018	-0.9117	0.0974	-1.0124	-0.0951	0.0441	0.0138	0.1705	0.0892
N'	-0.0066	-0.0799	-0.2142	0.0761	-0.2487	-0.9194	-0.0442	0.0356	0.0145	-0.4138

TABLE IV-3 CONTINUED
AH-IG STABILITY AND CONTROL DERIVATIVES -- SI UNITS
(BODY-FIXED FRL AXIS SYSTEM)

CASE 107 1 KT LEVEL FLIGHT AT SEA LEVEL 4309 KG MID CG

PHI	THETA	PSI	ALPHA	BETA	GAMMA	ORR	B1S	A1S	OTR
-1.13	-0.61	0.00	-0.61	0.01	0.00	15.83	-0.60	-1.92	10.06

XDOT	ZDOT	UO	VO	WO	VTO
0.51	0.00	0.51	0.00	-0.01	0.51

	U	W	Q	V	P	R	DC	DB	DA	DP
X	-0.0172	-0.0139	0.1639	-0.0282	-0.5081	-0.0159	-0.0166	0.1579	0.0042	-0.0025
Z	-0.0978	-0.3236	-0.0065	-0.0781	-0.0427	0.6394	-1.3340	0.0211	-0.0005	-0.0039
M	0.0033	-0.0128	-0.2970	0.0044	0.2455	0.0057	-0.0021	-0.0751	-0.0021	0.0045
Y	0.0194	-0.0036	-0.4226	-0.0524	-0.3589	0.2199	-0.0525	-0.0034	0.1055	0.1631
L'	0.0360	-0.0156	-0.9894	-0.0386	-0.8298	0.0393	-0.0254	-0.0077	0.2137	0.1459
N'	-0.0026	-0.0139	-0.1273	0.0502	-0.3701	-0.5365	0.2427	-0.0018	0.0132	-0.3016

CASE 108 60 KT LEVEL FLIGHT AT SEA LEVEL 4309 KG MID CG

PHI	THETA	PSI	ALPHA	BETA	GAMMA	ORR	B1S	A1S	OTR
-0.65	-2.03	0.00	-2.03	0.02	0.00	13.28	1.02	-1.78	1.07

XDOT	ZDOT	UO	VO	WO	VTO
30.87	0.00	30.85	0.01	-1.09	30.87

	U	W	Q	V	P	R	DC	DB	DA	DP
X	-0.0267	-0.0255	0.5196	-0.0049	-0.8357	-0.0279	-0.0725	0.1582	0.0033	-0.0070
Z	-0.1007	-0.6992	-0.3395	-0.0237	-0.3777	0.5289	-1.5067	0.2992	0.0110	-0.0073
M	0.0080	-0.0084	-0.3635	0.0006	0.1991	0.0237	0.0160	-0.0759	-0.0019	0.0075
Y	-0.0006	0.0012	-0.3789	-0.0893	-0.6260	0.3202	-0.0834	0.0030	0.1018	0.1606
L'	-0.0113	-0.0050	-0.6337	-0.0318	-1.3681	0.0652	0.0384	0.0110	0.2069	0.1608
N'	-0.0169	-0.0265	0.3310	0.0413	-0.3633	-0.8298	0.1366	0.0157	0.0108	-0.3338

CASE 109 100 KT LEVEL FLIGHT AT SEA LEVEL 4309 KG MID CG

PHI	THETA	PSI	ALPHA	BETA	GAMMA	ORR	B1S	A1S	OTR
-0.86	-2.97	0.00	-2.97	0.04	0.00	13.72	3.27	-1.82	2.43

XDOT	ZDOT	UO	VO	WO	VTO
51.44	0.00	51.38	0.04	-2.66	51.44

	U	W	Q	V	P	R	DC	DB	DA	DP
X	-0.0326	-0.0227	0.5120	-0.0018	-0.8106	-0.0149	-0.0795	0.1562	0.0022	-0.0108
Z	-0.0509	-0.8265	-0.8148	-0.0191	-0.6469	0.5640	-1.7606	0.5585	0.0196	-0.0120
M	0.0101	-0.0154	-0.4252	-0.0022	0.1821	0.0407	0.0138	-0.0801	-0.0016	0.0128
Y	0.0025	-0.0071	-0.1907	-0.1253	-0.5506	0.4394	-0.0158	0.0097	0.1021	0.2036
L'	-0.0084	-0.0186	-0.4749	-0.0296	-1.1904	0.0940	0.0101	0.0267	0.2077	0.1758
N'	-0.0116	-0.0235	0.2342	0.0419	-0.3089	-1.0986	0.1254	0.0245	0.0107	-0.3815

TABLE IV-3 CONTINUED
AH-IG STABILITY AND CONTROL DERIVATIVES -- SI UNITS
(BODY-FIXED FRL AXIS SYSTEM)

CASE 110 1 KT LEVEL FLIGHT AT SEA LEVEL 4309 KG FWD CG

PHI	THETA	PSI	ALPHA	BETA	GAMMA	θHR	B1S	A1S	θTR
-1.10	-3.10	0.00	-3.10	0.06	0.00	15.82	-2.84	-1.94	10.02

XDOT	ZDOT	U0	V0	W0	VT0
0.51	0.00	0.51	0.00	-0.03	0.51

	U	W	Q	V	P	R	DC	DB	DA	DP
X	-0.0225	-0.0269	0.1603	-0.0314	-0.5093	0.0246	-0.0754	0.1562	0.0049	-0.0007
Z	-0.1211	-0.3229	0.0067	-0.0761	0.0007	0.6378	-1.3328	0.0218	-0.0006	-0.0031
M	0.0030	-0.0136	-0.2923	0.0043	0.2461	0.0004	-0.0032	-0.0742	-0.0026	0.0031
Y	0.0186	-0.0038	-0.4211	-0.0521	-0.3539	0.2295	-0.0518	-0.0014	0.1066	0.1668
L'	0.0345	-0.0158	-0.8521	-0.0378	-0.8208	0.0525	-0.0210	-0.0023	0.2153	0.1522
N'	-0.0029	-0.0137	0.2552	0.0513	-0.3714	-0.5421	0.2458	-0.0020	0.0108	-0.3048

CASE 111 60 KT LEVEL FLIGHT AT SEA LEVEL 4309 KG FWD CG

PHI	THETA	PSI	ALPHA	BETA	GAMMA	θHR	B1S	A1S	θTR
-0.62	-4.28	0.00	-4.28	0.05	0.00	13.32	-1.08	-1.75	3.03

XDOT	ZDOT	U0	V0	W0	VT0
30.87	0.00	30.78	0.02	-2.30	30.87

	U	W	Q	V	P	R	DC	DB	DA	DP
X	-0.0324	-0.0520	0.4535	-0.0061	-0.4575	-0.0049	-0.1372	0.1656	0.0032	-0.0118
Z	-0.1228	-0.6954	-0.4539	-0.0229	-0.3465	0.5372	-1.5103	0.2873	0.0096	-0.0141
M	0.0086	-0.0109	-0.3468	0.0007	0.2029	0.0255	0.0151	-0.0717	-0.0016	0.0099
Y	-0.0007	0.0012	-0.3811	-0.0882	-0.6295	0.3303	-0.0039	0.0027	0.1024	0.1801
L'	-0.0118	-0.0043	-0.5116	-0.0343	-1.3536	0.0653	0.0391	0.0119	0.2075	0.1602
N'	-0.0182	-0.0264	0.6846	0.0435	-0.3339	-0.8549	0.1377	0.0158	0.0083	-0.3376

CASE 112 7 KT 4 M/S SEA LEVEL 4309 KG FWD CG

PHI	THETA	PSI	ALPHA	BETA	GAMMA	θHR	B1S	A1S	θTR
-1.33	-2.27	0.00	-92.28	1.33	90.00	16.65	-2.18	-2.21	11.27

XDOT	ZDOT	U0	V0	W0	VT0
0.00	-3.66	-0.15	0.08	-3.65	3.66

	U	W	Q	V	P	R	DC	DB	DA	DP
X	-0.0222	-0.0180	0.1952	-0.0194	-0.5220	-0.0066	-0.0636	0.1517	-0.0002	-0.0157
Z	-0.0663	-0.3644	-0.1318	-0.0761	-0.0286	0.6831	-1.3407	0.0172	0.0004	0.0026
M	0.0127	-0.0213	-0.3061	0.0060	0.2502	0.0021	-0.0063	-0.0701	0.0010	0.0245
Y	0.0141	-0.0202	-0.5809	-0.0606	-0.3097	0.2294	-0.0738	-0.0130	0.1017	0.1494
L'	0.0302	-0.0278	-0.9899	-0.0410	-0.7487	0.0322	-0.0519	-0.0239	0.2061	0.1154
N'	0.0031	0.0181	0.1912	0.0544	-0.4177	-0.5872	0.2779	-0.0032	0.0196	-0.3140

TABLE IV-3 CONTINUED
AH-IG STABILITY AND CONTROL DERIVATIVES -- SI UNITS
(BODY-FIXED FRL AXIS SYSTEM)

CASE 113 61 KT 10 M/S SEA LEVEL 4309 KG FWD CG

PHI	THETA	PSI	ALPHA	BETA	GAMMA	OMR	B1S	A1S	OTR
-1.46	-1.99	0.00	-19.79	0.49	17.81	17.03	1.51	-3.09	8.42

XDOT	ZDOT	UO	VO	WO	VTO
29.79	-9.57	29.44	0.27	-10.59	31.29

	U	W	Q	V	P	R	DC	DB	DA	DP
X	-0.0257	-0.0210	0.2641	-0.0055	-0.4413	-0.0182	-0.0850	0.1864	0.0097	-0.0011
Z	-0.0748	-0.6817	-0.3949	-0.0428	-0.3917	0.8029	-1.5340	0.3057	0.0245	0.0229
M	0.0103	-0.0357	-0.1496	-0.0007	0.1724	0.0475	-0.0425	-0.0690	-0.0037	0.0184
Y	0.0017	-0.0180	-0.4464	-0.0949	-0.3061	0.4185	-0.0451	0.0107	0.1165	0.1876
L'	-0.0103	-0.0187	-0.7384	-0.0619	-0.7443	0.1455	0.0123	0.0186	0.2318	0.1781
N'	-0.0207	0.0268	0.3551	0.0373	-0.4980	-0.9950	0.3075	-0.0061	0.0095	-0.3281

CASE 114 60 KT -8 M/S SEA LEVEL 4309 KG FWD CG

PHI	THETA	PSI	ALPHA	BETA	GAMMA	OMR	B1S	A1S	OTR
-0.08	-5.32	0.00	9.85	-0.01	-15.17	10.07	-2.93	-0.70	-0.37

XDOT	ZDOT	UO	VO	WO	VTO
29.79	8.08	30.41	-0.01	5.28	30.87

	U	W	Q	V	P	R	DC	DB	DA	DP
X	-0.0309	-0.0571	0.6610	-0.0051	-0.4400	0.0081	-0.1685	0.1601	0.0035	-0.0043
Z	-0.1478	-0.6651	-0.5544	-0.0099	-0.2110	0.3590	-1.4475	0.2597	0.0098	-0.0111
M	0.0055	-0.0071	-0.4316	-0.0002	0.2083	0.0177	0.0267	-0.0677	-0.0016	0.0025
Y	-0.0015	0.0123	-0.3407	-0.0994	-0.8377	0.2852	0.0271	-0.0014	0.0941	0.1866
L'	-0.0111	0.0054	-0.4174	0.0002	-1.7378	0.0327	0.0611	0.0065	0.1928	0.1575
N'	-0.0164	-0.0578	0.7914	0.0425	-0.1924	-0.7900	0.0217	0.0291	0.0087	-0.3556

CASE 115 1 KT LEVEL FLIGHT AT SEA LEVEL 4309 KG AFT CG

PHI	THETA	PSI	ALPHA	BETA	GAMMA	OMR	B1S	A1S	OTR
-1.18	2.60	0.00	2.60	-0.05	0.00	15.83	2.27	-1.90	10.11

XDOT	ZDOT	UO	VO	WO	VTO
0.51	0.00	0.51	-0.00	0.02	0.51

	U	W	Q	V	P	R	DC	DB	DA	DP
X	-0.0133	0.0029	0.1784	-0.0201	-0.4954	-0.0623	0.0615	0.1634	0.0048	0.0000
Z	-0.0685	-0.3233	-0.0184	-0.0799	-0.0981	0.6361	-1.3335	0.0215	-0.0002	-0.0039
M	0.0033	-0.0119	-0.3121	0.0050	0.2179	0.0050	-0.0034	-0.0797	-0.0035	0.0000
Y	0.0215	-0.0020	-0.3849	-0.0515	-0.3304	0.2453	-0.0377	0.0108	0.1149	0.1926
L'	0.0474	-0.0124	-1.0693	-0.0366	-0.7636	0.3064	0.0040	0.0221	0.2359	0.2132
N'	-0.0018	-0.0139	-0.6087	0.0449	-0.3610	-0.5155	0.2434	0.0014	0.0184	-0.2906

TABLE IV-3 CONCLUDED
AH-1G STABILITY AND CONTROL DERIVATIVES -- SI UNITS
(BODY-FIXED FRL AXIS SYSTEM)

CASE 116 60 KT LEVEL FLIGHT AT SEA LEVEL 4309 KG AFT CG

PHI	THETA	PSI	ALPHA	BETA	GAMMA	OMR	B1S	A1S	OTR
-0.69	0.82	0.00	0.42	-0.01	0.00	13.24	3.71	-1.81	3.13

XDOT	ZDOT	UO	VO	WO	VTO
30.87	0.00	30.96	-0.01	0.44	30.87

	U	W	Q	V	P	R	DC	DB	DA	DP
X	-0.0223	0.0085	0.5852	-0.0037	-0.4105	-0.0613	0.0075	0.1452	0.0017	-0.0065
Z	-0.0721	-0.7035	-0.2000	-0.0251	-0.4266	0.5055	-1.5046	0.3102	0.0091	-0.0085
M	0.0079	-0.0052	-0.3831	0.0006	0.1979	0.0244	0.0185	-0.0803	-0.0014	0.0070
Y	-0.0003	0.0010	-0.3753	-0.0912	-0.6237	0.3075	-0.0029	0.0033	0.1007	0.1815
L'	-0.0102	-0.0059	-0.7796	-0.0282	-1.3447	0.0661	0.0377	0.0102	0.2059	0.1625
N'	-0.0150	-0.0265	-0.1207	0.0381	-0.3561	-0.7989	0.1355	0.0153	0.0139	-0.3300

CASE 117 60 KT 10 M/S SEA LEVEL 4309 KG AFT CG

PHI	THETA	PSI	ALPHA	BETA	GAMMA	OMR	B1S	A1S	OTR
-1.53	2.74	0.00	-15.79	0.42	18.54	16.98	5.58	-3.16	8.50

XDOT	ZDOT	UO	VO	WO	VTO
29.26	-9.81	29.70	0.22	-8.40	30.87

	U	W	Q	V	P	R	DC	DB	DA	DP
X	-0.0287	0.0198	0.2525	-0.0015	-0.4051	-0.1119	0.0565	0.1515	0.0017	-0.0138
Z	-0.0355	-0.6825	-0.3022	-0.0453	-0.4902	0.7270	-1.5174	0.2968	0.0129	-0.0062
M	0.0107	-0.0173	-0.2737	-0.0003	0.1923	0.0391	0.0036	-0.0870	-0.0019	0.0220
Y	0.0032	-0.0172	-0.4372	-0.0934	-0.3109	0.3823	-0.0442	0.0118	0.1146	0.1882
L'	-0.0075	-0.0184	-0.9856	-0.0598	-0.7520	0.1410	0.0073	0.0171	0.2311	0.1831
N'	-0.0220	0.0260	-0.3513	0.0304	-0.5055	-0.9097	0.2971	-0.0102	0.0130	-0.3241

CASE 118 60 KT -9 M/S SEA LEVEL 4309 KG AFT CG

PHI	THETA	PSI	ALPHA	BETA	GAMMA	OMR	B1S	A1S	OTR
-0.09	-0.60	0.00	15.92	-0.02	-16.52	9.90	1.96	-0.75	-0.36

XDOT	ZDOT	UO	VO	WO	VTO
29.59	8.78	29.68	-0.01	8.47	30.87

	U	W	Q	V	P	R	DC	DB	DA	DP
X	-0.0161	-0.0306	0.8181	-0.0031	-0.4035	-0.0366	-0.0144	0.1401	0.0020	-0.0005
Z	-0.1026	-0.6124	-0.3363	-0.0136	-0.2061	0.3355	-1.4551	0.2786	0.0096	-0.0061
M	0.0068	-0.0161	-0.4657	-0.0005	0.2041	0.0189	0.0143	-0.0764	-0.0016	0.0008
Y	-0.0025	0.0111	-0.3492	-0.1135	-0.8401	0.2615	0.0268	-0.0012	0.0922	0.1846
L'	-0.0118	0.0039	-0.6899	0.0268	-1.7502	0.0245	0.0604	0.0031	0.1912	0.1554
N'	-0.0305	-0.0571	-0.0191	0.0400	-0.2278	-0.7448	0.0220	0.0305	0.0150	-0.3458

MICROFILMED FROM
BEST AVAILABLE COPY

TABLE IV-4

AH-IG STABILITY AND CONTROL DERIVATIVES -- US UNITS

(BODY-FIXED FRL AXIS SYSTEM)

CASE 56 -40 KT LEVEL FLIGHT AT SEA LEVEL 9000 LB MID CG

PHI	THETA	PSI	ALPHA	BETA	GAMMA	OMR	B1S	A1S	OTR
-0.75	-2.41	0.00	177.57	-0.03	180.00	12.72	-4.46	-0.13	3.41

XDOT	ZDOT	U0	V0	W0	VT0
-67.51	0.00	-67.45	-0.06	2.87	67.51

	U	W	Q	V	P	R	DC	DB	DA	DP
X	-0.0136	-0.0434	1.6335	-0.0021	-1.5035	0.1217	-0.4800	1.1679	0.0631	0.1869
Z	0.1286	-0.6508	0.2369	-0.0093	1.0227	1.7311	-13.4701	-1.8621	-0.1006	-0.0877
M	0.0018	0.0027	-0.1329	0.0006	0.1793	-0.0082	-0.0295	-0.1541	-0.0065	-0.0269
Y	-0.0019	-0.0249	-1.5326	-0.0429	-1.8439	0.5650	-0.4878	-0.1026	0.8263	1.5756
L'	0.0019	-0.0173	-0.7887	-0.0057	-1.2348	0.0473	-0.1477	-0.0723	0.4784	0.3088
N'	0.0046	-0.0079	0.3078	0.0065	-0.3416	-0.4112	0.3508	-0.0394	0.0332	-0.8177

CASE 57 -20 KT LEVEL FLIGHT AT SEA LEVEL 9000 LB MID CG

PHI	THETA	PSI	ALPHA	BETA	GAMMA	OMR	B1S	A1S	OTR
-0.97	-2.95	0.00	177.05	-0.05	180.00	13.79	-3.99	-0.53	5.75

XDOT	ZDOT	U0	V0	W0	VT0
-33.76	0.00	-33.71	-0.03	1.74	33.76

	U	W	Q	V	P	R	DC	DB	DA	DP
X	0.0028	-0.0369	1.1267	-0.0032	-1.5259	0.1156	-0.4286	1.3493	0.1261	0.3919
Z	0.2097	-0.4833	-0.9979	-0.0246	0.5470	1.7875	-12.2503	-0.8752	-0.0759	-0.0979
M	0.0034	-0.0004	-0.1475	0.0009	0.1847	-0.0166	-0.0359	-0.1745	-0.0102	-0.0432
Y	0.0009	-0.0151	-1.5411	-0.0407	-1.3228	0.5782	-0.3639	0.0190	0.8954	1.5810
L'	0.0067	-0.0121	-0.8199	-0.0075	-0.7311	0.0787	-0.0397	-0.0055	0.5115	0.3193
N'	0.0076	-0.0054	0.3394	0.0083	-0.1375	-0.3874	0.4750	-0.0118	0.0358	-0.7695

CASE 58 -10 KT LEVEL FLIGHT AT SEA LEVEL 9000 LB MID CG

PHI	THETA	PSI	ALPHA	BETA	GAMMA	OMR	B1S	A1S	OTR
-1.07	-1.92	0.00	178.09	-0.04	180.00	14.41	-2.79	-1.08	7.38

XDOT	ZDOT	U0	V0	W0	VT0
-15.89	0.00	-16.87	-0.01	0.56	16.88

	U	W	Q	V	P	R	DC	DB	DA	DP
X	-0.0208	-0.0233	0.7565	-0.0101	-1.9186	-0.1619	-0.5291	1.1676	-0.0278	-0.0908
Z	0.1777	-0.4042	-1.1236	-0.0605	0.3118	2.0198	-12.1497	-0.2436	0.0112	0.1051
M	0.0077	-0.0037	-0.2056	0.0016	0.2236	0.0162	0.0590	-0.1137	0.0061	0.0240
Y	0.0358	-0.0161	-1.7777	-0.0577	-1.1690	0.6166	-0.4609	-0.0716	0.0692	1.6109
L'	0.0095	-0.0087	[illegible]	-0.0073	-0.7256	0.5749	-0.9536	-0.0360	0.0960	0.2407
N'	0.0068	-0.0031	0.2937	0.0112	[illegible]	[illegible]	0.5600	-0.0148	0.0166	-0.7780

TABLE IV-4 CONTINUED
AH-IG STABILITY AND CONTROL DERIVATIVES -- US UNITS
(BODY-FIXED FRL AXIS SYSTEM)

CASE 59 1 KT LEVEL FLIGHT AT SEA LEVEL 8000 LB MID CG

PHI	THETA	PSI	ALPHA	BETA	GAMMA	QBR	B1S	A1S	QTR
-1.15	-0.71	0.00	-0.71	0.01	0.00	14.81	-0.76	-1.80	8.43

XDOT	ZDOT	U0	V0	W0	VT0
1.69	0.00	1.69	0.00	-0.02	1.69

	U	W	Q	V	P	R	DC	DP	DA	DP
X	-0.0165	-0.0155	0.3655	-0.0265	-1.8499	-0.1221	-0.2560	1.2425	-0.0130	-0.1453
Z	-0.1208	-0.3726	-0.0113	-0.0932	-0.1345	2.0756	-12.7606	0.1799	-0.0035	-0.0305
M	0.0005	-0.0033	-0.2345	0.0007	0.2305	0.0175	0.0076	-0.1462	0.0035	0.0322
Y	0.0173	-0.0051	-1.5941	-0.0552	-1.1026	0.7182	-0.5515	-0.1182	0.8875	1.2837
L'	0.0085	-0.0060	-1.0553	-0.0087	-0.7662	-0.0401	-0.0925	-0.0686	0.4709	0.1816
N'	-0.0012	-0.0047	-0.1161	0.0158	-0.3945	-0.5366	0.5795	-0.0095	0.0319	-0.8120

CASE 60 10 KT LEVEL FLIGHT AT SEA LEVEL 8000 LB MID CG

PHI	THETA	PSI	ALPHA	BETA	GAMMA	QBR	B1S	A1S	QTR
-1.05	-1.10	0.00	-1.10	0.02	0.00	14.42	-0.69	-2.02	7.52

XDOT	ZDOT	U0	V0	W0	VT0
16.88	0.00	16.87	0.01	-0.32	16.88

	U	W	Q	V	P	R	DC	DP	DA	DP
X	-0.0163	-0.0106	0.9706	-0.0154	-1.7470	-0.0595	-0.2890	1.3148	0.0403	-0.0040
Z	-0.2090	-0.4060	0.8210	-0.0530	-0.1136	1.9603	-12.3576	0.4270	0.0170	-0.0210
M	0.0002	-0.0026	-0.2299	0.0017	0.2141	0.0049	0.0085	-0.1607	-0.0056	0.0036
Y	0.0180	0.0002	-1.5623	-0.0562	-1.1609	0.8066	-0.3238	0.0141	0.8870	1.4888
L'	0.0068	-0.0033	-0.9165	-0.0061	-0.8109	0.0164	0.0198	0.0073	0.5144	0.3136
N'	-0.0040	-0.0044	0.0522	0.0133	-0.4245	-0.5325	0.5436	-0.0008	0.0351	-0.7733

CASE 61 20 KT LEVEL FLIGHT AT SEA LEVEL 8000 LB MID CG

PHI	THETA	PSI	ALPHA	BETA	GAMMA	QBR	B1S	A1S	QTR
-0.91	-1.59	0.00	-1.59	0.03	0.00	13.81	-0.73	-2.12	6.11

XDOT	ZDOT	U0	V0	W0	VT0
33.76	0.00	33.74	0.01	-0.91	33.76

	U	W	Q	V	P	R	DC	DP	DA	DP
X	-0.0293	-0.0194	1.2469	-0.0139	-1.7329	-0.0625	-0.4383	1.3050	0.0265	-0.0516
Z	-0.2485	-0.5022	0.8873	-0.0429	-0.4836	1.9929	-12.1662	0.9473	0.0346	-0.0232
M	0.0004	-0.0013	-0.2289	0.0014	0.2102	0.0059	0.0258	-0.1590	-0.0033	0.0106
Y	0.0142	0.0000	-1.5744	-0.0599	-1.4716	0.8115	-0.2437	0.0017	0.8639	1.3622
L'	0.0036	-0.0021	-0.9171	-0.0064	-0.9883	0.0241	0.0425	0.0061	0.5018	0.2706
N'	-0.0064	-0.0017	0.1957	0.0119	-0.4419	-0.5411	0.4781	0.0072	0.0341	-0.7121

TABLE IV-4 CONTINUED
AH-IG STABILITY AND CONTROL DERIVATIVES -- US UNITS
(BODY-FIXED FRL AXIS SYSTEM)

CASE 62 40 KT LEVEL FLIGHT AT SEA LEVEL 8000 LB MID CG

PHI	THETA	PSI	ALPHA	BETA	GAMMA	OMR	B1S	A1S	OTR
-0.71	-1.81	0.00	-1.81	0.02	0.00	12.77	-0.10	-1.93	1.69

XDOT	ZDOT	U0	V0	W0	VT0
67.51	0.00	67.48	0.01	-2.13	67.51

	U	W	Q	V	P	R	DC	DB	DA	DP
X	-0.0273	-0.0761	1.5626	-0.0086	-1.6517	-0.0380	-0.5675	1.3186	0.0156	-0.0750
Z	-0.1688	-0.7394	-0.2631	-0.0315	-0.9439	1.6536	-13.2839	1.8167	0.3528	-0.0696
M	0.0017	-0.0021	-3.2805	0.0007	0.1951	0.0149	0.0304	-0.1590	-0.0023	0.0151
Y	0.0081	0.0017	-1.5067	-0.0793	-1.9277	1.0265	-0.0712	0.0378	0.8501	1.6574
L'	0.0005	-0.0034	-0.7411	-0.0060	-1.2112	0.0250	0.0909	0.0327	0.4930	0.2938
N'	-0.0061	-0.0063	0.2837	0.0128	-0.4142	-3.7310	0.3660	0.0273	0.0295	-0.7881

CASE 63 60 KT LEVEL FLIGHT AT SEA LEVEL 8000 LB MID CG

PHI	THETA	PSI	ALPHA	BETA	GAMMA	OMR	B1S	A1S	OTR
-0.69	-2.25	0.00	-2.25	0.03	0.00	12.42	0.70	-1.56	2.39

XDOT	ZDOT	U0	V0	W0	VT0
101.27	0.00	101.19	0.05	-3.98	101.27

	U	W	Q	V	P	R	DC	DB	DA	DP
X	-0.0268	-0.0285	1.7170	-0.0046	-1.6369	-0.0658	-0.6761	1.3088	0.0163	-0.0506
Z	-0.1060	-0.8377	-1.4216	-0.0285	-1.4263	1.7699	-15.0092	2.9518	0.0733	-0.0869
M	0.0019	-0.0030	-3.3246	0.0000	0.1856	0.0199	0.0287	-0.1578	-0.0029,	0.0152
Y	0.0006	-0.0003	-1.4116	-0.1019	-2.0665	1.3046	-0.0595	0.0196	0.8415	1.7390
L'	-0.0031	-0.0031	-0.6703	-0.0046	-1.2701	0.0375	0.0776	0.0227	0.4875	0.3607
N'	-0.0048	-0.0087	0.3029	0.0166	-0.3519	-0.4970	0.2937	0.0362	0.0268	-0.9630

CASE 64 80 KT LEVEL FLIGHT AT SEA LEVEL 8000 LB MID CG

PHI	THETA	PSI	ALPHA	BETA	GAMMA	OMR	B1S	A1S	OTR
-0.78	-2.71	0.00	-2.71	0.04	0.00	12.55	1.77	-1.11	2.02

XDOT	ZDOT	U0	V0	W0	VT0
135.02	0.00	134.87	0.09	-6.39	135.02

	U	W	Q	V	P	R	DC	DB	DA	DP
X	-0.0296	-0.0261	1.7666	-0.0027	-1.5508	-0.0997	-0.6851	1.3066	0.0158	-0.1066
Z	-0.0731	-0.9261	-2.3562	-0.0711	-1.9744	1.7612	-16.6351	4.2226	0.2956	-0.1017
M	0.0072	-0.0062	-3.3456	-0.0008	0.1736	0.0251	0.0195	-0.1618	-0.0082	0.0239
Y	0.0022	[illegible]	[illegible]	-0.1236	-1.9690	1.5129	-0.0941	0.0627	0.8516	1.8191
L'	-0.0021	[illegible]	[illegible]	[illegible]	[illegible]	[illegible]	0.0626	0.0696	0.4912	0.3369
N'	-0.0062	[illegible]	0.2167	[illegible]	[illegible]	[illegible]	[illegible]	0.0659	0.0232	-1.0179

TABLE IV-4 CONTINUED
AH-IG STABILITY AND CONTROL DERIVATIVES -- US UNITS
(BODY-FIXED FRL AXIS SYSTEM)

CASE 65 100 KT LEVEL FLIGHT AT SEA LEVEL 9000 LB MID CG

PHI	THETA	PSI	ALPHA	BETA	GAMMA	OMR	BIS	AIS	OTR
-0.99	-3.36	0.00	-3.36	0.06	0.00	11.26	3.06	-1.29	2.03

XDOT	ZDOT	UO	VO	WO	VTO
168.76	0.00	168.49	0.17	-9.93	168.78

	U	W	Q	V	P	R	DC	DB	DA	DP
X	-0.0353	-0.0206	1.6610	-0.0022	-1.5577	-0.0756	-0.6101	1.2576	0.0048	-0.0976
Z	-0.0520	-0.9907	-1.1263	-0.0216	-2.5723	1.0685	-17.4603	5.5308	0.1216	-0.1588
M	0.0026	-0.0058	-0.3849	-0.0007	0.1733	0.0129	0.0062	-0.1666	-0.0071	0.0298
Y	0.0031	-0.0112	-1.6643	-0.1051	-1.7698	1.7320	-0.1956	0.0042	0.9395	1.9266
L'	-0.0015	-0.0081	-0.7296	-0.0025	-1.1063	0.0256	-0.0069	0.0641	0.6056	0.3537
N'	-0.0032	-0.0076	0.1597	0.0152	-0.3083	-1.1868	0.2730	0.0542	0.0263	-1.0733

CASE 66 120 KT LEVEL FLIGHT AT SEA LEVEL 9000 LB MID CG

PHI	THETA	PSI	ALPHA	BETA	GAMMA	OMR	BIS	AIS	OTR
-1.32	-4.24	0.00	-4.24	0.10	0.00	16.33	4.67	-1.52	2.49

XDOT	ZDOT	UO	VO	WO	VTO
202.54	0.00	201.98	0.35	-14.97	202.56

	U	W	Q	V	P	R	DC	DB	DA	DP
X	-0.0416	-0.0105	1.5367	-0.0011	-1.4691	-0.1526	-0.6136	1.1830	0.0009	-0.1365
Z	-0.0337	-1.0651	-3.5457	-0.0276	-1.1035	2.0683	-18.7277	6.0985	0.1536	-0.1602
M	0.0029	-0.0080	-0.4076	-0.0011	0.1566	0.0391	-0.0206	-0.1762	-0.0020	0.0650
Y	0.0046	-0.0206	-1.4747	-0.1659	-1.3656	1.9750	-0.3565	0.1576	0.8505	1.9970
L'	-0.0008	-0.0109	-0.8015	-0.0026	-0.9010	0.0616	-0.0608	0.0971	0.6913	0.3611
N'	-0.0023	-0.0028	-0.0176	0.0165	-0.3476	-1.1367	0.3666	0.0320	0.0288	-1.1193

CASE 67 140 KT LEVEL FLIGHT AT SEA LEVEL 9000 LB MID CG

PHI	THETA	PSI	ALPHA	BETA	GAMMA	OMR	BIS	AIS	OTR
-1.79	-5.56	0.00	-5.56	0.17	0.00	15.57	6.59	-2.02	3.49

XDOT	ZDOT	UO	VO	WO	VTO
236.29	0.00	235.19	0.71	-22.92	236.29

	U	W	Q	V	P	R	DC	DB	DA	DP
X	-0.0516	0.0025	1.3643	0.0003	-1.3633	-0.1695	-0.1156	1.0817	-0.0026	-0.1796
Z	-0.0206	-1.0002	-1.6267	-0.0176	-1.0676	2.3527	-19.7911	8.4228	0.1866	-0.1762
M	0.0036	-0.0109	-0.6362	-0.0017	0.1373	0.0509	-0.0621	-0.1978	-0.0033	0.0693
Y	0.0057	-0.0111	-1.5771	-0.1971	-0.4233	2.2116	-0.6966	0.2364	0.8775	2.0303
L'	0.0005	-0.0120	-0.9551	-0.0061	-0.6093	0.0667	-0.1290	0.1278	0.5551	0.3525
N'	-0.0013	0.0061	-0.0516	0.0176	-0.1118	-1.5329	0.5229	-0.0510	0.0268	-1.1673

MICROFILMED FROM
BEST AVAILABLE COPY

TABLE IV-4 CONTINUED

AH-IG STABILITY AND CONTROL DERIVATIVES -- US UNITS

(BODY-FIXED FRL AXIS SYSTEM)

CASE 68   37 KT   3680 FT/MIN   SEA LEVEL   9000 LB   MID CG

PHI	THETA	PSI	ALPHA	BETA	GAMMA	AMP	B1S	A1S	DTR
-1.77	2.01	0.00	-67.17	1.76	90.00	16.91	2.19	-2.51	11.02

XDOT	ZDOT	UO	VO	WO	VTO
0.00	-29.00	1.38	0.06	-27.95	24.30

	U	W	Q	V	P	R	DC	DB	DA	DP
X	-0.0253	0.0123	0.2220	-0.0176	-1.7201	-0.2172	0.6178	1.0651	0.2391	3.0152
Z	-0.0497	-0.5069	-0.6770	-0.0966	-0.6714	2.4938	-13.7066	0.1308	-0.0026	-0.0611
M	-0.0001	-0.0135	-0.3009	-0.0005	0.2015	-0.0062	-0.0871	-0.1681	-0.0012	0.0575
Y	0.0182	-0.0293	-2.1566	-0.0809	-0.8686	1.0063	-0.7602	-0.1126	0.8818	1.6699
L'	0.0071	-0.0102	-1.3200	-0.0103	-0.4366	0.0156	-0.1602	-0.0025	0.5017	3.2037
N'	0.0017	0.0118	-0.3602	0.0211	-0.4776	-0.6729	0.8001	-0.0092	0.0331	-0.8769

CASE 69   60 KT   2340 FT/MIN   SEA LEVEL   9000 LB   MID CG

PHI	THETA	PSI	ALPHA	BETA	GAMMA	AMP	B1S	A1S	DTR
-1.80	1.11	0.00	-21.51	0.66	22.65	16.95	4.01	-1.09	8.05

XDOT	ZDOT	UO	VO	WO	VTO
93.45	-39.00	94.21	1.17	-37.12	101.26

	U	W	Q	V	P	R	DC	DB	DA	DP
X	-0.0265	0.0151	3.3508	-0.0035	-1.5609	-0.2863	0.1958	1.3915	0.0303	-0.0772
Z	-0.0666	-0.8151	-1.5760	-0.0526	-1.6116	2.8159	-15.9626	2.9635	0.1716	0.0963
M	0.0008	-0.0146	-0.2218	-0.0003	0.1638	0.0366	-0.9520	-0.1830	-0.0075	0.0660
Y	0.0052	-0.0266	-1.6166	-0.1082	-0.4266	1.7120	-0.4183	0.1890	1.0458	1.9305
L'	-0.0023	-0.0066	-0.9551	-0.0169	-0.6110	0.1626	0.0960	0.0896	0.5993	0.6082
N'	-0.0069	0.0125	-0.1638	0.0133	-0.5299	-1.0505	0.9490	-0.0380	0.0307	-0.9015

CASE 70   100 KT   -2094 FT/MIN   SEA LEVEL   8000 LB   MID CG

PHI	THETA	PSI	ALPHA	BETA	GAMMA	AMP	B1S	A1S	DTR
-1.97	-1.06	0.00	-12.97	0.43	11.93	17.22	5.02	-2.66	6.21

XDOT	ZDOT	UO	VO	WO	VTO
165.11	-34.99	164.47	1.27	-17.48	168.78

	U	W	Q	V	P	R	DC	DB	DA	DP
X	-0.0401	0.0069	0.2796	0.0002	-1.6905	-0.2921	0.0619	1.2721	0.0161	-0.2181
Z	-0.0166	-0.9601	-2.7011	-0.0506	-2.7867	2.9970	-17.6690	5.6603	0.1880	0.0165
M	0.0036	-0.0105	-0.2291	-0.0016	0.1692	0.0251	-0.0576	-0.1036	-0.0029	0.1101
Y	0.0067	-0.0117	-1.7059	-0.1699	-0.6501	1.1169	-0.6725	0.1736	0.9729	1.0657
L'	-0.0016	-0.0099	-1.0006	-0.0135	-0.1952	0.0205	-1.0055	0.0613	0.5552	0.1109
N'	-0.0074	0.0165	-0.0671	0.0121	-0.4177	-1.1255	0.9962	-0.0930	0.0270	-1.0262

TABLE IV-4 CONTINUED

AH-IG STABILITY AND CONTROL DERIVATIVES -- US UNITS

(BODY-FIXED FRL AXIS SYSTEM)

CASE 71 60 KT -1066 FT/MIN SEA LEVEL 9000 LB MID CG

PHI	THETA	PSI	ALPHA	BETA	GAMMA	ANR	B1S	A1S	OTP
-0.03	-1.09	0.00	16.01	-0.01	-17.09	8.09	-1.59	-0.39	-0.70

XDOT	ZDOT	UO	VO	WO	VTO
96.37	31.10	98.26	-0.01	24.51	101.27

	U	W	Q	V	P	R	DC	DB	DA	DP
X	-0.0213	-0.0739	2.7646	-0.0027	-1.5659	-0.0342	-0.9503	1.2597	0.0178	-0.0162
Z	-0.1501	-0.7629	-1.8695	-0.0106	-0.9664	0.9572	-16.6050	2.6069	0.0780	-0.0638
M	0.0016	-0.0057	-0.4218	-0.0006	0.1925	0.0166	0.0735	-0.1686	-0.0028	0.0033
Y	-0.0010	0.0152	-1.2835	-0.1256	-3.0707	1.1353	0.2808	-0.0250	0.7550	1.7517
L'	-0.0030	0.0016	-0.5363	0.0159	-1.8174	0.0115	0.1610	0.0178	0.6052	0.3138
N'	-0.0038	-0.0211	0.6956	0.0152	-0.1969	-0.4372	-0.0638	0.0091	0.0313	-0.9701

CASE 72 100 KT -2250 FT/MIN SEA LEVEL 9300 LB MID CG

PHI	THETA	PSI	ALPHA	BETA	GAMMA	ANR	B1S	A1S	OTP
-0.31	-5.09	0.00	7.75	-0.06	-12.84	8.04	-0.57	0.22	-0.09

XDOT	ZDOT	UO	VO	WO	VTO
166.56	37.50	167.26	-0.12	22.75	168.78

	U	W	Q	V	P	R	DC	DB	DA	DP
X	-0.0309	-0.0382	2.9912	-0.0012	-1.5228	-0.0211	-1.1951	1.2392	-0.3015	0.0121
Z	-0.0968	-0.9793	-3.7981	0.0052	-1.9698	0.6510	-17.2565	5.3618	0.1800	-0.1552
M	0.0012	-0.0030	-0.5269	-0.0008	0.1817	0.0106	0.0670	-0.1369	-0.3008	-0.0101
Y	0.0022	0.3187	-1.2229	-0.1515	-3.7266	1.5066	0.1363	-0.0767	0.6769	1.9328
L'	-0.0009	-0.0025	-0.5511	0.0162	-1.7692	-0.0013	0.0890	0.0289	0.6023	0.3269
N'	-0.0012	-0.0282	0.3139	0.0165	-0.1195	-1.0996	-0.2866	0.1953	0.0317	-1.1125

CASE 73 6 KT -600 FT/MIN SEA LEVEL 8000 LB MID CG

PHI	THETA	PSI	ALPHA	BETA	GAMMA	ANR	B1S	A1S	OTP
-9.95	-1.26	0.00	89.74	-0.95	-90.00	14.23	-1.19	-1.91	7.23

XDOT	ZDOT	UO	VO	WO	VTO
0.03	10.00	0.22	-0.17	10.00	10.00

	U	W	Q	V	P	R	DC	DB	DA	DP
X	-0.0217	[illegible]	1.0611	[illegible]	[illegible]	-0.1711	-0.2699	1.1292	0.2591	0.0747
Z	-0.0979	-0.1699	-0.1208	[illegible]	[illegible]	1.9529	-13.7968	0.1111	-0.1808	-0.1138
M	0.1918	-0.0712	[illegible]	0.0011	0.2199	-0.0912	-0.0079	-0.1610	-0.3091	-0.0219
Y	[illegible]	[illegible]	[illegible]	[illegible]	[illegible]	[illegible]	[illegible]	[illegible]	[illegible]	1.5912
L'	[illegible]	[illegible]	[illegible]	[illegible]	[illegible]	[illegible]	[illegible]	[illegible]	[illegible]	0.3741
N'	[illegible]	[illegible]	[illegible]	[illegible]	[illegible]	[illegible]	[illegible]	[illegible]	[illegible]	-0.7191

TABLE IV-4 CONTINUED
AH-IG STABILITY AND CONTROL DERIVATIVES -- US UNITS
(BODY-FIXED FRL AXIS SYSTEM)

CASE 74 12 KT -1200 FT/MIN SEA LEVEL 8000 LB MID CG

PHI	THETA	PSI	ALPHA	BETA	GAMMA	θMR	B1S	A1S	θTR
-0.79	-1.72	0.00	88.28	-0.79	-90.00	13.66	-1.65	-1.26	6.02

XDOT	ZDOT	U0	V0	W0	VT0
0.00	20.00	0.62	-0.27	19.99	20.00

	U	W	Q	V	P	R	DC	DB	DA	DP
X	-0.0247	-0.0090	1.0828	-0.0313	-1.4391	-0.1905	-0.3950	1.2733	0.0400	0.0193
Z	-0.1162	-0.3045	-0.2118	-0.0930	0.0638	1.8956	-12.6874	0.1661	-0.0064	-0.0442
M	0.0034	-0.0033	-0.3153	0.0012	0.2247	0.0058	0.0140	-0.1539	-0.0049	-0.0170
Y	0.0249	0.0038	-1.5073	-0.0507	-1.2292	0.7533	-0.3114	-0.0056	0.8562	1.3675
L'	0.0110	-0.0015	-0.8746	-0.0071	-0.7830	0.0058	0.0084	-0.0038	0.4991	0.2854
N'	-0.0020	-0.0071	0.0524	0.0148	-0.2591	-0.4901	0.4966	-0.0025	0.0360	-0.7192

CASE 75 6 KT 600 FT/MIN SEA LEVEL 9000 LB MID CG

PHI	THETA	PSI	ALPHA	BETA	GAMMA	θMR	B1S	A1S	θTR
-1.35	0.11	0.00	-89.99	1.35	90.00	15.51	-0.04	-1.98	9.28

XDOT	ZDOT	U0	V0	W0	VT0
0.00	-10.00	0.02	0.24	-10.00	10.00

	U	W	Q	V	P	R	DC	DB	DA	DP
X	-0.0170	-0.0039	0.6120	-0.0216	-1.7779	-0.0537	0.0056	1.3279	0.0262	-0.0222
Z	-0.0670	-0.4134	-0.4355	-0.0912	-0.2215	2.2223	-12.8109	0.1569	0.0148	0.0348
M	0.0007	-0.0061	-0.2564	0.0007	0.2147	0.0002	-0.0203	-0.1561	-0.0014	0.0325
Y	0.0136	-0.0207	-2.0590	-0.0623	-0.9533	0.8027	-0.6048	-0.1079	0.8346	1.3532
L'	0.0081	-0.0080	-1.1304	-0.0090	-0.6413	-0.0183	-0.1009	-0.0691	0.4811	0.1950
N'	0.0008	0.0051	0.0139	0.0177	-0.4224	-0.5632	0.6532	-0.0078	0.0340	-0.8276

CASE 76 12 KT 1200 FT/MIN SEA LEVEL 8000 LB MID CG

PHI	THETA	PSI	ALPHA	BETA	GAMMA	θMR	B1S	A1S	θTR
-1.56	1.40	0.00	-88.60	1.56	90.00	16.26	1.04	-2.23	10.17

XDOT	ZDOT	U0	V0	W0	VT0
0.00	-20.00	0.49	0.55	-19.99	20.00

	U	W	Q	V	P	R	DC	DB	DA	DP
X	-0.0211	[illegible]	0.3962	-0.0231	-1.7412	-0.1340	0.3031	1.3908	0.0375	0.0069
Z	-0.0555	-0.4638	-0.5471	-0.0939	-0.4939	2.3650	-12.9903	0.1412	0.0071	0.0044
M	0.0004	-0.0098	-0.2799	-0.0001	0.1563	-0.0084	-0.0556	-0.1662	-0.0052	0.0360
Y	0.0124	-0.0240	-2.0341	-0.0710	-0.5372	0.9843	-0.5941	-0.0211	0.9165	1.5993
L'	0.0080	[illegible]	-1.1730	[illegible]	[illegible]	[illegible]	-0.0596	[illegible]	[illegible]	[illegible]
N'	[illegible]	[illegible]	[illegible]	[illegible]	[illegible]	[illegible]	[illegible]	[illegible]	[illegible]	[illegible]

TABLE IV-4 CONTINUED

AH-IG STABILITY AND CONTROL DERIVATIVES -- US UNITS

(BODY-FIXED FRL AXIS SYSTEM)

CASE 77 60 KT 1200 FT/MIN SEA LEVEL 9000 LB MID CG

PHI	THETA	PSI	ALPHA	BETA	GAMMA	QMR	B1S	A1S	OTR
-1.21	-1.04	0.00	-12.42	0.24	11.39	14.78	2.04	-2.36	5.04

XDOT	ZDOT	U0	V0	W0	VTO
99.24	-20.00	98.90	0.46	-21.79	101.27

	U	W	Q	V	P	R	DC	DB	DA	DP
X	-0.0288	-0.0169	0.9001	-0.0030	-1.5885	-0.1453	-0.3293	1.3478	0.0249	-0.0702
Z	-0.0801	-0.9255	-1.3429	-0.0303	-1.5295	2.2996	-15.3852	2.9720	0.1162	-0.0073
M	0.0024	-0.0353	-0.2421	-0.0002	0.1762	0.0271	0.0013	-0.1671	-0.0039	0.0328
Y	0.0019	-0.0144	-1.5829	-0.1028	-1.2620	1.4504	-0.2879	0.0697	0.9123	1.7111
L'	-0.0030	-0.0053	-0.8093	-0.0111	-0.9628	0.0614	0.0547	0.0366	0.5249	0.3470
N'	-0.0056	0.0022	0.1767	0.0127	-0.4515	-0.9663	0.5757	-0.0029	0.0286	-0.9180

CASE 78 60 KT 600 FT/MIN SEA LEVEL 9000 LB MID CG

PHI	THETA	PSI	ALPHA	BETA	GAMMA	QMR	B1S	A1S	OTR
-0.94	-1.73	0.00	-7.40	0.12	5.67	13.62	1.33	-1.96	3.66

XDOT	ZDOT	U0	V0	W0	VTO
100.79	-10.00	100.43	0.21	-13.04	101.27

	U	W	Q	V	P	R	DC	DB	DA	DP
X	-0.0280	-0.0237	1.1262	-0.0044	-1.5059	-0.1068	-0.5114	1.3368	0.0224	-0.0569
Z	-0.0940	-0.8305	-1.3800	-0.0315	-1.4987	2.0062	-15.0341	2.9918	0.0952	-0.0435
M	0.0022	-0.0038	-0.2818	-0.0000	0.1791	0.0238	0.0153	-0.1627	-0.0036	0.0224
Y	0.0009	-0.0083	-1.5005	-0.1011	-1.6597	1.3699	-0.1724	0.0541	0.8776	1.7224
L'	-0.0032	-0.0748	-0.7398	-0.0081	-1.0789	0.0441	0.0652	0.0361	0.5065	0.3442
N'	-0.0051	-0.0036	0.2435	0.0138	-0.4142	-0.9114	0.4299	0.0177	0.0275	-0.9279

CASE 79 60 KT -600 FT/MIN SEA LEVEL 9000 LB MID CG

PHI	THETA	PSI	ALPHA	BETA	GAMMA	QMR	B1S	A1S	OTR
-0.86	-2.69	0.00	2.98	-0.32	-5.67	11.21	0.07	-1.16	1.20

XDOT	ZDOT	U0	V0	W0	VTO
100.74	10.00	101.14	-0.04	5.27	101.27

	U	W	Q	V	P	R	DC	DB	DA	DP
X	-0.0210	-0.0190	2.1233	-0.0044	-1.5698	-0.0506	-0.7518	1.1071	0.0221	-0.0556
Z	-0.1176	-0.9387	-1.4559	-0.0362	-1.3224	1.9522	-14.0379	2.9607	0.1020	-0.0411
M	0.0317	-0.0029	-0.1649	-0.0001	0.1616	0.0157	0.0117	-0.1545	-0.0036	0.0117
Y	-0.0001	[illegible]	[illegible]	-0.1074	-2.0519	1.2219	0.0936	0.0641	0.0070	1.6969
L'	-0.0032	[illegible]	[illegible]	[illegible]	-1.0731	0.0172	0.1101	0.0217	0.0709	0.1006
N'	-0.0061	[illegible]	0.1226	0.0161	[illegible]	[illegible]	0.1232	0.0790	0.0209	-0.9656

TABLE IV-4 CONTINUED
AH-IG STABILITY AND CONTROL DERIVATIVES -- US UNITS
(BODY-FIXED FRL AXIS SYSTEM)

CASE 90 60 KT -1200 FT/MIN SEA LEVEL 8000 LB MID CG

PHI	THETA	PSI	ALPHA	BETA	GAMMA	θMR	B1S	A1S	θTR
-0.25	-3.11	0.00	8.27	-0.04	-11.39	9.96	-0.70	-0.75	0.24

XDOT	ZDOT	U0	V0	W0	VT0
99.29	20.00	100.22	-0.06	14.56	101.27

	U	W	Q	V	P	R	DC	DB	DA	DP
X	-0.0253	-0.0331	2.4224	-0.0041	-1.5915	-0.0407	-0.8992	1.2775	0.0157	-0.0271
Z	-0.1298	-0.8280	-1.6502	-0.0127	-1.1332	1.1500	-14.6770	2.8437	0.0726	-0.0732
M	0.0013	-0.0025	-0.3987	-0.0002	0.1904	0.0161	0.0475	-0.1483	-0.0023	0.0061
Y	-0.0009	0.0115	-1.3154	-0.1127	-2.7111	1.1606	0.1937	-0.0122	0.7756	1.7621
L'	-0.0031	-0.0002	-0.5895	0.0048	-1.6257	0.0040	0.1297	0.0194	0.4546	0.3191
N'	-0.0039	-0.0173	0.3971	0.0143	-0.2420	-0.8574	0.0520	0.0736	0.0293	-0.9819

CASE 81 1 KT LEVEL FLIGHT 10000 FT 8000 LB MID CG

PHI	THETA	PSI	ALPHA	BETA	GAMMA	θMR	B1S	A1S	θTR
-1.35	-0.60	0.00	-0.60	0.01	0.00	16.64	-0.63	-2.06	11.76

XDOT	ZDOT	U0	V0	W0	VT0
1.69	0.00	1.69	0.00	-0.02	1.69

	U	W	Q	V	P	R	DC	DB	DA	DP
X	-0.0197	-0.0145	0.6787	-0.0295	-1.8846	-0.1043	-0.1826	1.2713	-0.0127	-0.1393
Z	-0.0843	-0.2994	0.0314	-0.0681	-0.0823	2.0947	-10.0711	0.1492	-0.0170	-0.0689
M	0.0012	-0.0036	-0.2759	0.0014	0.2124	0.0041	0.0042	-0.1502	0.0029	0.0318
Y	0.0199	-0.0038	-1.5766	-0.0521	-1.3800	0.6119	-0.4797	-0.0817	0.8471	1.1071
L'	0.0108	-0.0045	-1.0303	-0.0104	-0.9499	-0.0361	-0.0429	-0.0455	0.4931	0.1891
N'	-0.0001	-0.0031	-0.1093	0.0132	-0.4646	-0.4977	0.6025	-0.0087	0.0329	-0.6632

CASE 82 60 KT LEVEL FLIGHT 10000 FT 8000 LB MID CG

PHI	THETA	PSI	ALPHA	BETA	GAMMA	θMR	B1S	A1S	θTR
-0.76	-2.06	0.00	-2.06	0.03	0.00	14.02	1.15	-1.98	4.00

XDOT	ZDOT	U0	V0	W0	VT0
101.27	0.00	101.20	0.05	-3.64	101.27

	U	W	Q	V	P	R	DC	DB	DA	DP
X	-0.0272	-0.0242	2.0576	-0.0054	-1.5124	-0.0812	-0.6203	1.3225	0.0145	-0.0779
Z	-0.0971	-0.5037	-1.6640	-0.0233	-1.0312	1.7378	-10.9987	2.1615	0.0620	-0.0899
M	0.0022	-0.0020	-0.3424	0.0002	0.1722	0.0135	0.0401	-0.1611	-0.0021	0.0198
Y	-0.0019	0.0027	-1.3971	-0.0815	-2.3229	1.0292	-0.0436	0.0077	0.4488	1.3026
L'	-0.0036	0.0001	-0.6111	-0.0069	-1.4781	-0.0261	0.1241	0.0148	0.4930	0.2697
N'	-0.0044	-0.0041	0.4011	0.0102	-0.4491	-0.7144	0.3971	0.0247	0.0289	-0.6897

TABLE IV-4 CONTINUED

AH-IG STABILITY AND CONTROL DERIVATIVES -- US UNITS

(BODY-FIXED FRL AXIS SYSTEM)

CASE 83 100 KT LEVEL FLIGHT 12000 FT 4300 LB MID CG

PHI	THETA	PSI	ALPHA	BETA	GAMMA	OMR	B1S	A1S	OTR
-3.98	-2.97	0.00	-2.95	0.35	0.00	14.36	1.41	-1.59	3.38

XDOT	ZDOT	U0	V0	W0	VT0
168.79	0.00	168.56	0.15	-8.70	168.78

	U	W	Q	V	P	R	DC	DB	DA	DP
X	-0.0119	-0.0206	1.9500	-0.0016	-1.5306	-0.0119	-0.6625	1.3728	0.0106	-0.1229
Z	-0.0480	-0.7030	-1.4618	-0.0146	-1.6467	1.0689	-12.5821	4.0208	0.1113	-0.0651
M	0.0025	-0.0036	-0.3795	-0.0036	0.1659	0.0109	0.3385	-0.1710	-0.3018	0.0371
Y	0.0028	-0.0044	-1.6535	-0.1129	-1.9211	1.2764	-0.1156	0.0535	0.9487	1.4898
L'	-0.0011	-0.0021	-0.7019	-0.0049	-1.2256	-0.0139	0.0929	0.0444	0.4949	0.2798
N'	-0.0025	-0.0038	0.2559	0.0108	-0.3519	-0.9469	0.4216	0.0353	0.0328	-0.7906

CASE 84 12 KT 1200 FT/MIN 13000 FT 8000 LB MID CG

PHI	THETA	PSI	ALPHA	BETA	GAMMA	OMR	B1S	A1S	OTR
-1.79	1.61	0.00	-88.39	1.79	90.00	18.06	1.23	-2.46	14.25

XDOT	ZDOT	U0	V0	W0	VT0
0.00	-20.00	0.56	0.62	-19.98	20.00

	U	W	Q	V	P	R	DC	DB	DA	DP
X	-0.0244	0.0011	0.7496	-0.0246	-1.7957	-0.1302	0.2814	1.4084	0.0362	0.1211
Z	-0.0381	-0.3540	-0.2941	-0.0720	-0.2837	2.2877	-10.1228	0.1407	0.3040	0.0638
M	0.0015	-0.0091	-0.3198	0.0004	0.2091	-0.0367	-0.0529	-0.1727	-0.0080	0.0435
Y	0.0159	-0.0175	-1.8311	-0.0628	-0.7204	0.8165	-0.4045	0.1066	1.0116	1.2527
L'	0.0103	-0.0056	-1.0813	-0.0104	-0.6154	0.0764	0.0521	0.0586	0.5850	0.3043
N'	0.0020	0.0067	-0.2223	0.0156	-3.5543	-0.4323	0.7540	-0.0043	0.3379	-0.4739

CASE 85 60 KT 1680 FT/MIN 13000 FT 8000 LB MID CG

PHI	THETA	PSI	ALPHA	BETA	GAMMA	OMR	B1S	A1S	OTR
-1.68	1.23	0.00	-14.84	0.41	16.05	17.31	4.46	-3.18	15.61

XDOT	ZDOT	U0	V0	W0	VT0
97.12	-28.00	97.99	0.76	-25.98	101.27

	U	W	Q	V	P	R	DC	DB	DA	DP
X	-0.0251	0.0069	1.0381	-0.0066	-1.6718	-0.1516	0.0777	1.1621	0.2170	-0.1079
Z	-0.0507	-0.5905	-1.9569	-0.0151	-1.1919	2.1041	-10.9206	2.1297	0.0961	-0.0167
M	0.0021	-0.0071	-0.2681	0.0001	0.2257	0.0508	-0.0115	-0.1711	-0.0028	0.0667
Y	-0.0081	-0.0191	-1.6362	-0.0720	-0.9871	0.5097	-0.1720	0.0796	0.9826	0.8785
L'	-0.0038	-0.0512	-0.9517	-0.1117	-0.1166	0.0307	0.1191	0.0256	0.5196	0.2283
N'	-0.0015	0.0072	-0.1619	0.0009	-0.6144	-0.7036	0.7610	-0.0201	0.0263	-0.1070

MICROFILMED FROM BEST AVAILABLE COPY

TABLE IV-4 CONTINUED

AH-IG STABILITY AND CONTROL DERIVATIVES -- US UNITS

(BODY-FIXED FRL AXIS SYSTEM)

CASE 86 60 KT -1668 FT/MIN 10000 FT 9092 LB MID CG

PHI	THETA	PSI	ALPHA	BETA	GAMMA	OMR	B1S	A1S	OTR
-0.12	-1.05	0.03	12.88	-0.03	-15.91	13.67	-0.63	-0.92	-0.17

XDOT	ZDOT	U0	V0	W0	VT0
97.38	27.80	98.72	-0.05	22.58	101.27

	U	W	Q	V	P	R	DC	DB	DA	DP
X	-0.0243	-0.3527	2.9236	-0.0059	-1.5036	-0.0111	-0.8254	1.2832	0.0247	-0.0127
Z	-0.1226	-0.5194	-1.9342	-0.0102	-0.5360	1.2907	-10.8924	1.9148	0.0686	-0.0813
M	0.0015	-0.0026	-0.4325	-0.0000	0.1865	0.0141	0.9542	-0.1517	-0.0033	0.0030
Y	-0.0028	0.0115	-1.2701	-0.0951	-1.1912	0.8159	0.1791	-0.0167	0.7893	1.3655
L'	-0.0037	0.0017	-0.5245	0.0048	-1.9330	-0.0269	0.1499	0.0129	0.4645	0.2659
N'	-0.0036	-0.0130	0.5228	0.0103	-0.3072	-1.6504	0.1310	0.0579	0.0321	-0.7332

CASE 87 100 KT -1800 FT/MIN 13300 FT 9000 LB MID CG

PHI	THETA	PSI	ALPHA	BETA	GAMMA	OMR	B1S	A1S	OTR
-0.10	-4.19	0.00	6.05	-0.01	-10.24	10.32	0.88	-0.35	-0.43

XDOT	ZDOT	U0	V0	W0	VT0
166.09	30.00	167.84	-0.09	17.79	168.78

	U	W	Q	V	P	R	DC	DB	DA	DP
X	-0.0292	-0.0108	1.9763	-0.0021	-1.4955	0.0421	-1.0091	1.2839	0.0074	-0.0127
Z	-0.0729	-0.7008	-3.7254	-0.0029	-1.3520	1.1905	-12.5961	1.8595	0.1032	-0.1515
M	0.0017	-0.0023	-0.5121	-0.0004	0.1794	0.0070	0.0692	-0.1545	-0.0016	-0.0035
Y	0.0008	0.0096	-1.3100	-0.1208	-1.0636	1.1239	0.1509	-0.0413	0.7447	1.5003
L'	-0.0013	-0.0010	-0.9066	0.0054	-1.8538	-0.0152	0.0836	0.0226	0.4407	0.2798
N'	-0.0012	-0.0162	-1.5298	0.0104	-0.2471	-0.9695	-0.0086	0.1248	0.0326	-0.8285

CASE 88 1 KT LEVEL FLIGHT AT SEA LEVEL 9000 LB FWD CG

PHI	THETA	PSI	ALPHA	BETA	GAMMA	OMR	B1S	A1S	OTR
-1.10	-4.24	0.00	-4.24	0.08	0.00	16.91	-1.95	-1.75	8.35

XDOT	ZDOT	U0	V0	W0	VT0
1.69	0.00	1.68	0.00	-0.12	1.69

	U	W	Q	V	P	R	DC	DB	DA	DP
X	-0.0260	-0.0161	0.3930	-0.0332	-1.4029	0.1136	-0.9953	1.2865	0.0366	0.0027
Z	-0.1567	-0.1712	0.0517	-0.0900	0.0751	2.9626	-12.7502	0.1856	-0.0071	-0.0388
M	0.0001	-0.0037	-0.2171	0.0005	0.2227	-0.0306	-0.0057	-0.1565	-0.0051	0.0065
Y	0.0170	-0.0342	-1.5166	-0.0533	-1.3033	0.0195	-0.0669	-0.0030	0.0069	1.5168
L'	0.0006	-0.0054	-0.7766	-0.0372	-0.7053	0.3299	-0.9266	0.0010	0.5100	0.3071
N'	-0.3013	[illegible]	[illegible]	[illegible]	[illegible]	[illegible]	0.5111	[illegible]	0.0279	-0.9129

TABLE IV-4 CONTINUED
AH-1G STABILITY AND CONTROL DERIVATIVES -- US UNITS
(BODY-FIXED FRL AXIS SYSTEM)

CASE 91 60 KT LEVEL FLIGHT AT SEA LEVEL 8000 LB FWD CG

PHI	THETA	PSI	ALPHA	BETA	GAMMA	RMP	B1S	A1S	RTR
-0.65	-5.41	0.00	-5.41	0.06	0.00	12.47	-2.29	-1.50	2.31

XDOT	ZDOT	UO	VO	WO	VTO
101.27	0.00	100.82	0.11	-9.55	101.27

	U	W	Q	V	P	R	DC	DB	DA	DP
X	-0.0361	-0.0733	1.4232	-0.0058	-1.6761	0.0513	-1.5230	1.4677	0.0378	-0.0501
Z	-0.1438	-0.8313	-1.9710	-0.0228	-1.1990	1.8164	-14.9432	2.8907	0.1070	-0.0312
M	0.0020	-0.0041	-0.3109	-0.0000	0.1054	0.0197	0.0197	-0.1478	-0.0043	0.0170
Y	0.0001	-0.0027	-1.4215	-0.1002	-2.9544	1.3498	-0.0388	0.0293	0.8511	1.7098
L'	-0.0035	-0.0027	-0.4516	-0.0058	-1.2817	0.0264	0.0972	0.0359	0.4917	0.3270
N'	-0.0054	-0.0089	0.8603	0.0153	-0.3357	-0.9392	0.3055	0.0433	0.0229	-0.9493

CASE 93 100 KT LEVEL FLIGHT AT SEA LEVEL 8000 LB FWD CG

PHI	THETA	PSI	ALPHA	BETA	GAMMA	RMP	B1S	A1S	RTR
-0.94	-5.94	0.00	-5.94	0.10	0.00	13.15	0.54	-1.22	1.94

XDOT	ZDOT	UO	VO	WO	VTO
168.78	0.00	167.87	0.29	-17.47	168.78

	U	W	Q	V	P	R	DC	DB	DA	DP
X	-0.0399	-0.0657	1.2710	-0.0034	-1.7079	-0.0229	-1.5095	1.5131	0.0127	-0.1453
Z	-0.0873	-0.9866	-4.1348	-0.0203	-2.3971	1.9136	-17.5650	5.3521	0.1593	-0.2313
M	0.0028	-0.0082	-0.3815	-0.0007	0.1741	0.0414	-0.0160	-0.1400	-0.0015	0.0325
Y	0.0026	-0.0102	-1.4200	-0.1426	-1.7390	1.8614	-0.1232	0.1299	0.0872	2.0237
L'	-0.0017	-0.0069	-0.5079	-0.0040	-1.0940	0.0492	0.0481	0.1037	0.5195	0.4134
N'	-0.0037	-0.0079	0.6521	0.0162	-0.2990	-1.2517	0.2909	0.0630	0.0215	-1.0895

CASE 91 1 KT LEVEL FLIGHT AT SEA LEVEL 8000 LB AFT CG

PHI	THETA	PSI	ALPHA	BETA	GAMMA	RMP	B1S	A1S	RTR
-1.19	1.43	0.00	3.43	-0.07	0.00	14.82	3.07	-1.75	8.44

XDOT	ZDOT	UO	VO	WO	VTO
1.69	0.00	1.68	-0.00	0.10	1.69

	U	W	Q	V	P	R	DC	DB	DA	DP
X	-0.0160	0.0107	0.4749	-0.0158	-1.7394	-0.2481	0.7407	1.3538	0.0298	-0.0073
Z	-0.0756	-0.1717	-0.0817	-0.0348	-0.3952	2.0581	-12.7510	0.1789	0.0005	-0.0281
M	0.0004	-0.0031	-0.2547	0.0009	0.2168	0.0093	-0.0041	-0.1619	-0.0040	0.0086
Y	0.0199	-0.0031	-1.4895	-0.0542	-1.3154	0.7915	-0.4189	-0.0028	0.8923	1.5111
L'	0.0130	-0.0050	-1.2611	-0.0002	-0.2322	0.0152	-0.0266	-0.0112	0.3157	0.3161
N'	-0.0009	-0.0042	-0.0259	0.0151	-0.1707	-0.5031	0.5111	-0.0024	0.0151	-0.7844

TABLE IV-4 CONTINUED
AH-1G STABILITY AND CONTROL DERIVATIVES -- US UNITS
(BODY-FIXED FRL AXIS SYSTEM)

CASE 92 60 KT LEVEL FLIGHT AT SEA LEVEL 8000 LB AFT CG

PHI	THETA	PSI	ALPHA	BETA	GAMMA	QHR	B1S	A1S	QTR
-0.74	1.35	0.00	1.35	-0.02	0.00	17.37	4.20	-1.58	2.47

XDOT	ZDOT	UO	VO	WO	VTO
101.27	0.00	101.24	-0.03	2.38	101.27

	U	W	Q	V	P	R	DC	DB	DA	DP
X	-0.0223	0.0239	1.9836	-0.0229	-1.4976	-0.2163	0.3626	1.1445	0.0153	-0.0547
Z	-0.0612	-0.8430	-0.7293	-0.0264	-1.6483	1.6109	-14.9241	1.1282	0.0926	-0.0544
M	0.0018	-0.0017	-0.3416	-0.0000	0.1846	0.0209	0.0358	-0.1713	-0.0028	0.0159
Y	0.0007	-0.0010	-1.3937	-0.1049	-2.0193	1.2412	-0.0133	0.0406	0.8418	1.7320
L'	-0.0027	-0.0034	-0.9038	-0.0028	-1.2649	0.0400	0.0922	0.0336	0.4952	0.3399
N'	-0.0039	-0.0083	-0.3376	0.0132	-0.3647	-0.8571	0.3017	0.0405	0.0410	-0.9272

CASE 93 100 KT LEVEL FLIGHT AT SEA LEVEL 8000 LB AFT CG

PHI	THETA	PSI	ALPHA	BETA	GAMMA	QHR	B1S	A1S	QTR
-1.07	-0.49	0.00	-0.49	0.01	0.00	13.00	5.99	-1.38	2.16

XDOT	ZDOT	UO	VO	WO	VTO
168.78	0.00	168.77	0.03	-1.43	168.78

	U	W	Q	V	P	R	DC	DB	DA	DP
X	-0.0350	0.0314	1.9127	-0.0004	-1.3536	-0.2008	0.4707	0.9562	0.0152	-0.1015
Z	-0.0103	-0.9939	-1.9670	-0.0232	-2.7365	1.7366	-17.5316	5.9144	0.1638	0.0508
M	0.0020	-0.0031	-0.3890	-0.0007	0.1727	0.0291	0.0337	-0.1937	-0.0028	0.0317
Y	0.0043	-0.0138	-1.4288	-0.1483	-1.6764	1.6775	-0.2020	0.1106	0.8206	1.9210
L'	-0.0007	-0.0091	-0.9355	-0.0004	-1.0694	0.0450	-0.0111	0.0782	0.4933	0.3522
N'	-0.0025	-0.0064	-0.4001	0.0133	-0.3316	-1.1124	0.2782	0.0697	0.0413	-1.0586

CASE 94 1 KT LEVEL FLIGHT AT SEA LEVEL 6500 LB MID CG

PHI	THETA	PSI	ALPHA	BETA	GAMMA	QHR	B1S	A1S	QTR
-1.15	-0.82	0.00	-0.82	0.02	0.00	11.79	-0.83	-1.56	6.85

XDOT	ZDOT	UO	VO	WO	VTO
1.69	0.00	1.69	0.00	-0.02	1.69

	U	W	Q	V	P	R	DC	DB	DA	DP
X	-0.0147	-0.0158	0.2180	-0.0277	-1.9954	-0.0341	-0.2365	1.3021	0.0290	0.0081
Z	-0.1529	-0.4397	0.0070	-0.1140	-0.1984	2.9457	-15.0322	0.1771	-0.0006	-0.0253
M	-0.0001	-0.0012	-0.1985	-0.0002	0.2075	0.0049	-0.0041	-0.1318	-0.0033	0.0061
Y	0.0174	-0.0039	-1.7174	-0.0574	-1.7937	0.9111	-0.4504	-0.0044	0.8735	1.6766
L'	0.0074	-0.0065	-1.0856	-0.0061	-0.5067	-0.0279	0.3079	-0.0036	0.4983	0.2121
N'	-0.0016	-0.0049	-0.1075	0.0166	-0.3711	-0.5296	0.5496	-0.0024	0.0397	-0.8195

TABLE IV-4 CONTINUED

AH-1G STABILITY AND CONTROL DERIVATIVES -- US UNITS

(BODY-FIXED FRL AXIS SYSTEM)

CASE 95 60 KT LEVEL FLIGHT AT SEA LEVEL 6500 LB MID CG

PHI	THETA	PSI	ALPHA	BETA	GAMMA	SHP	B1S	A1S	OTR
-0.77	-2.57	0.00	-2.57	0.01	0.00	11.58	0.66	-1.32	1.86

XDOT	ZDOT	U0	V0	W0	VTO
101.27	0.00	101.17	0.06	-4.46	101.27

	U	W	Q	V	P	R	DC	DB	DA	DP
X	-0.0286	-0.0302	1.7191	-0.0061	-1.4611	-0.0599	-0.6571	1.1166	0.0226	-0.0069
Z	-0.1126	-1.3366	-1.8636	-0.0261	-1.4698	1.7669	-10.6651	1.7210	0.1051	-0.0535
M	0.0016	-0.0039	-0.2996	-0.0022	0.1779	0.0192	0.0070	-0.1298	-0.0026	0.0165
Y	0.0016	-0.0026	-1.6917	-0.1213	-1.9917	1.6696	-0.2553	0.0358	0.8668	2.0533
L'	-0.0031	-0.0064	-0.7836	0.0020	-1.2169	-0.0371	0.0900	0.0350	0.6677	0.2365
N'	-0.0043	-0.0086	0.2211	0.0169	-0.3595	-1.0001	0.2603	0.0380	0.0368	-1.0593

CASE 96 100 KT LEVEL FLIGHT AT SEA LEVEL 6500 LB MID CG

PHI	THETA	PSI	ALPHA	BETA	GAMMA	SHP	B1S	A1S	OTR
-1.21	-3.85	0.00	-3.85	0.08	0.00	12.50	3.02	-1.26	1.76

XDOT	ZDOT	U0	V0	W0	VTO
168.78	0.00	168.40	0.26	-11.36	168.78

	U	W	Q	V	P	R	DC	DB	DA	DP
X	-0.0396	-0.0112	1.5626	-0.0023	-1.7167	-0.1029	-0.3623	1.2067	0.0019	-0.1325
Z	-0.0496	-1.2222	-1.5875	-0.0256	-1.3585	1.9591	-21.6652	7.0679	0.1691	-0.0136
M	0.0022	-0.0079	-0.3583	-0.0008	0.1510	0.0148	-0.0360	-0.1296	0.0006	0.0366
Y	0.0066	-0.0172	-1.7450	-0.1765	-1.5611	2.1913	-0.2782	0.1016	0.8266	2.2276
L'	-0.0016	-0.0101	-0.9128	0.0061	-0.9891	-0.0926	-0.0095	0.0708	0.6576	0.2035
N'	-0.0027	-0.0051	-0.0662	0.0178	-0.3602	-1.1266	0.3026	0.0617	0.0353	-1.2136

CASE 97 1 KT LEVEL FLIGHT AT SEA LEVEL 6500 LB FWD CG

PHI	THETA	PSI	ALPHA	BETA	GAMMA	SHP	B1S	A1S	OTR
-1.10	-5.18	0.00	-5.18	0.10	0.00	13.76	-4.90	-1.55	6.79

XDOT	ZDOT	U0	V0	W0	VTO
1.69	0.00	1.69	0.00	-0.15	1.69

	U	W	Q	V	P	R	DC	DB	DA	DP
X	-0.3110	-0.0670	0.1376	-0.0354	-2.0171	3.1718	-1.8321	1.2739	0.0327	0.0111
Z	-0.2096	-0.4171	0.1292	-0.1106	0.9971	2.0381	-15.0055	0.2016	0.0601	-0.0136
M	-0.0002	-0.0016	-0.1919	-0.0002	0.2116	0.0005	-0.0036	-0.1292	-0.0017	0.0066
Y	0.0157	-0.0062	-1.7251	-0.0172	-0.3917	0.5616	-0.6661	-0.0020	0.1708	1.6717
L'	0.0965	-0.0361	-0.6837	-0.7039	-0.5956	-0.0799	0.3111	0.0019	0.6791	0.2016
N'	-0.0015	-0.0058	0.7617	0.0169	-0.1753	-0.5160	0.5536	-0.0066	0.3116	-0.9560

MICROFILMED FROM
BEST AVAILABLE COPY

TABLE IV-4 CONTINUED

AH-IG STABILITY AND CONTROL DERIVATIVES - - US UNITS

(BODY-FIXED FRL AXIS SYSTEM)

CASE 98   60 FT   LEVEL FLIGHT AT SEA LEVEL   6500 LB   FWD CG

PHI	THETA	PSI	ALPHA	BETA	GAMMA	OMR	B1S	A1S	OTR
-0.72	-6.31	0.03	-6.38	0.38	0.90	11.63	-1.26	-1.27	1.74

XDOT	ZDOT	UO	VO	WO	VTO
101.27	0.00	100.64	0.40	-11.25	101.27

	U	W	Q	V	P	R	DC	DB	DA	DP
X	-0.0418	-0.0346	1.1057	-0.0058	-1.9451	0.0452	-1.9786	1.5844	0.0121	-0.0644
Z	-0.1718	-1.0271	-2.4776	-0.0237	-1.3501	1.9436	-18.4134	3.5782	0.1099	-0.0107
M	0.0315	-0.0051	-0.2891	-0.0002	0.1759	0.1191	-0.0029	-0.1173	-0.0031	0.0169
Y	0.0005	-0.0029	-1.7136	-0.1193	-2.0236	1.7106	-0.0608	0.0233	0.9400	1.9969
L'	-0.0038	-0.0042	-0.4275	0.0003	-1.2121	-0.0611	0.0010	0.0122	0.4595	0.1993
N'	-0.0051	-0.0083	0.9921	0.0179	-0.3435	-1.3569	0.2640	0.0385	0.0232	-1.0846

CASE 99   20 FT   2846 FT/MIN   SEA LEVEL   6500 LB   FWD CG

PHI	THETA	PSI	ALPHA	BETA	GAMMA	OMR	B1S	A1S	OTR
-2.30	4.79	0.00	-85.21	2.29	90.00	17.69	3.40	-2.88	10.88

XDOT	ZDOT	UO	VO	WO	VTO
0.00	-47.44	3.96	1.90	-47.24	47.44

	U	W	Q	V	P	R	DC	DB	DA	DP
X	-0.0413	0.0283	-0.0945	-0.0019	-1.9446	-0.3005	1.1538	1.5821	0.0304	-0.0051
Z	-0.0461	-0.7525	-1.2136	-0.1017	-0.9707	3.2367	-16.5815	0.2719	0.0806	3.1169
M	-0.0047	-0.0282	-3.3153	-0.0007	0.1687	0.0058	-0.2606	-0.1521	-0.0036	0.0852
Y	0.0056	-0.0469	-2.5310	-0.1177	0.7098	1.6335	-0.9651	-0.0230	1.0240	1.9683
L'	0.0068	-0.0112	-1.5663	-0.0045	0.1288	0.0435	-0.0511	-0.0252	0.5546	0.2529
N'	0.0032	0.0237	-0.5611	0.0304	-0.5722	-0.8816	1.0269	0.0002	0.0335	-0.9771

CASE 100   60 FT   2880 FT/MIN   SEA LEVEL   6500 LB   FWD CG

PHI	THETA	PSI	ALPHA	BETA	GAMMA	OMR	B1S	A1S	OTR
-2.22	-1.32	0.03	-29.59	1.15	29.29	17.31	2.59	-1.28	4.01

XDOT	ZDOT	UO	VO	WO	VTO
89.17	-48.30	88.94	1.96	-50.39	101.27

	U	W	Q	V	P	R	DC	DB	DA	DP
X	-0.0116	0.0376	-0.5990	-0.0049	-1.9726	-0.2687	-0.1620	1.5091	0.0286	-0.1071
Z	-0.0456	-1.0129	-2.1977	-0.0469	-1.9361	1.6866	-16.4822	3.2968	0.2167	0.1276
M	0.0028	-0.0257	-0.2912	-0.0006	0.1516	0.0575	-0.1721	-0.1218	0.0000	0.0006
Y	0.0057	-0.0399	-2.1819	-0.1255	0.1972	2.1776	-0.4661	0.0396	0.9308	1.4965
L'	-0.0039	-0.0095	-1.1236	-0.0164	[illegible]	-0.3465	0.0053	-0.0169	0.5117	0.1961
N'	-0.0069	0.0221	1.0611	0.0399	-0.6192	-1.2007	1.3170	-0.0678	0.0260	-1.0115

TABLE IV-4 CONTINUED

AH-IG STABILITY AND CONTROL DERIVATIVES -- US UNITS

(BODY-FIXED FRL AXIS SYSTEM)

CASE 301   35 KT   -3000 FT/MIN   SEA LEVEL   6500 LB   FWD CG

PHI	THETA	PSI	ALPHA	BETA	GAMMA	RPM	B1S	A1S	OTR
-0.05	-8.52	0.00	81.48	-0.05	-90.00	9.39	-6.62	-0.29	0.25

XDOT	ZDOT	U0	V0	W0	VTO
0.00	50.00	5.68	-0.06	49.68	50.00

	U	W	Q	V	P	R	DC	DB	DA	DP
X	-0.0340	-0.0794	1.6295	-0.1026	-1.6640	0.3615	-1.5851	1.1688	0.3298	0.0562
Z	-0.0152	-0.7069	-1.5766	0.0677	0.6095	-0.9747	-12.6925	0.0611	0.0097	-0.0339
M	0.0001	0.0002	-0.2361	-0.0052	0.1966	-0.0270	0.0073	-0.1190	-0.9030	-0.0365
Y	0.0216	0.0017	-1.6531	-0.0916	-2.1902	1.0810	-0.0989	0.0231	0.7790	1.1635
L'	0.0100	-0.0031	-3.4762	0.0006	-1.2141	-0.1852	0.0672	0.0167	0.4366	0.2639
N'	-0.0016	-0.0002	1.1709	0.0784	-0.1035	-1.1199	0.1552	0.0061	0.0300	-0.5861

CASE 302   60 KT   -1680 FT/MIN   SEA LEVEL   6500 LB   FWD CG

PHI	THETA	PSI	ALPHA	BETA	GAMMA	RPM	B1S	A1S	OTR
-0.10	-8.02	0.00	8.01	-0.31	-16.05	9.13	-6.06	-0.20	-0.50

XDOT	ZDOT	U0	V0	W0	VTO
97.32	28.00	100.27	-0.02	14.15	101.27

	U	W	Q	V	P	R	DC	DB	DA	DP
X	-0.0469	-0.1221	2.4292	-0.0035	-1.8112	0.1021	-2.7063	1.4992	0.0205	-0.0337
Z	-0.2211	-1.0036	-3.1057	-0.0056	-0.0550	0.8868	-17.9823	3.2389	0.3776	-0.1017
M	0.0007	-0.0026	-0.3930	-0.0006	0.1871	0.0099	0.0619	-0.1076	-0.0018	0.0065
Y	0.0009	0.0187	-1.5616	-0.1115	-3.2561	1.5216	0.3156	-0.0660	0.7323	2.0726
L'	-0.0031	-0.0099	-3.2019	0.0150	-1.8272	-0.0531	0.1056	0.0190	0.4079	0.1996
N'	-0.0056	-0.0210	1.3668	0.0180	-0.1751	-0.3968	-0.1399	0.0955	0.0255	-1.1163

CASE 303   1 KT   LEVEL FLIGHT AT SEA LEVEL   6500 LB   AFT CG

PHI	THETA	PSI	ALPHA	BETA	GAMMA	RPM	B1S	A1S	OTR
-1.19	3.59	0.00	3.59	-0.37	0.00	11.79	3.27	-1.56	6.88

XDOT	ZDOT	U0	V0	W0	VTO
1.69	0.00	1.68	-0.00	0.11	1.69

	U	W	Q	V	P	R	DC	DB	DA	DP
X	-0.0069	0.0162	0.2761	-0.0162	-1.9671	-0.2618	0.9609	1.3396	0.0165	-0.0251
Z	-0.0957	-0.6195	-0.0317	-0.1161	[illegible]	2.0132	-15.0200	0.1701	0.2061	-0.0161
M	-0.0001	-0.0022	-0.2060	0.0001	[illegible]	0.0190	-0.0039	-0.1357	-0.3022	0.0096
Y	0.0192	-0.0012	-1.6625	-0.0577	-0.771	[illegible]	-0.4166	0.0167	0.0061	1.7206
L'	0.0006	-0.0057	[illegible]	-0.0061	[illegible]	[illegible]	0.0921	0.1053	0.4971	0.2591
N'	[illegible]	-0.0061	[illegible]	[illegible]	[illegible]	[illegible]	[illegible]	[illegible]	0.0696	[illegible]

TABLE IV-4 CONTINUED

AH-IG STABILITY AND CONTROL DERIVATIVES -- US UNITS

(BODY-FIXED FRL AXIS SYSTEM)

CASE 104 60 KT LEVEL FLIGHT AT SEA LEVEL 6500 LB AFT CG

PHI	THETA	PSI	ALPHA	BETA	GAMMA	RHP	B1S	A1S	OTR
-0.84	1.18	0.00	1.16	-0.07	0.00	11.55	4.35	-1.39	1.94

XDOT	ZDOT	U0	V0	W0	VT0
101.27	0.03	101.25	-0.01	2.09	101.27

	U	W	Q	V	P	R	DC	DB	DA	DP
X	-0.0261	0.0190	2.0150	-0.0023	-1.6335	-0.1195	0.6608	1.0823	0.0136	-0.0598
Z	-0.0532	-1.0420	-0.9536	-0.0281	-1.9103	1.5917	-10.3907	3.9356	0.0966	-0.0036
M	0.0013	-0.0025	-0.3121	-0.0002	0.1770	0.0172	0.9176	-0.1440	-0.0020	0.0159
Y	0.0024	-0.0036	-1.6652	-0.1250	-1.9687	1.5966	-0.0676	0.0549	0.8360	2.0556
L'	-0.0023	-0.0052	-1.1152	0.0044	-1.1960	-0.0179	0.0916	0.0424	0.6696	0.2601
N'	-0.0035	-0.0078	-0.5178	0.0155	-5.1736	-0.9503	0.2619	0.0399	0.0444	-1.0487

CASE 105 60 KT 3056 FT/MIN SEA LEVEL 6500 LB AFT CG

PHI	THETA	PSI	ALPHA	BETA	GAMMA	RHP	B1S	A1S	OTR
-2.41	6.33	0.00	-23.53	0.98	30.17	17.29	8.31	-3.32	7.98

XDOT	ZDOT	U0	V0	W0	VT0
87.55	-50.90	92.62	1.72	-40.91	101.27

	U	W	Q	V	P	R	DC	DB	DA	DP
X	-0.0306	0.1052	-0.3226	0.0022	-1.5932	-0.6559	2.0027	1.1011	-0.0156	-3.1625
Z	0.0376	-1.0037	-1.1911	-0.0704	-2.3755	1.1869	-10.6387	3.4621	0.1372	-0.0268
M	-0.0003	-0.0177	-0.1603	-0.0003	0.1561	0.0610	-0.0836	-0.1710	-0.0016	0.0669
Y	0.0103	-0.0383	-2.0036	-0.1256	0.4791	2.0579	-0.7566	0.1557	1.3306	2.0968
L'	-0.0020	-0.0066	-1.6197	-0.0131	0.0268	0.0627	0.0689	0.0283	0.5676	0.3171
N'	-0.0092	0.0216	-1.1916	0.0161	-0.5787	-1.1693	1.0191	-0.0752	0.0661	-0.9998

CASE 106 60 KT -1760 FT/MIN SEA LEVEL 6500 LB AFT CG

PHI	THETA	PSI	ALPHA	BETA	GAMMA	RHP	B1S	A1S	OTR
-0.21	-1.15	0.00	15.69	-0.06	-16.64	8.20	1.72	-0.36	-1.19

XDOT	ZDOT	U0	V0	W0	VT0
97.01	29.03	97.59	-0.10	27.04	101.27

	U	W	Q	V	P	R	DC	DB	DA	DP
X	-0.0170	-0.0192	1.2816	-0.0006	-1.6138	-0.0059	0.1721	1.0717	0.0171	-0.0171
Z	-0.1031	-0.9997	-1.5097	-0.0123	-1.6392	0.7120	-10.2065	1.6235	0.0873	-0.0236
M	0.0036	-0.0058	-0.4198	-0.0006	0.1835	0.0113	0.0907	-0.1196	-0.0025	0.0062
Y	-0.0903	0.0158	-1.5529	-0.1507	-1.1022	1.6251	0.1100	-0.0067	0.7678	2.1177
L'	-0.0027	0.0005	-0.3117	0.0298	-1.3121	-0.0651	0.1171	0.0161	0.6110	0.2265
N'	-0.0020	-0.0216	-0.2162	0.1171	-3.2617	-0.9166	-0.1121	0.0029	0.0619	-1.1001

TABLE IV-4 CONTINUED

AH-IG STABILITY AND CONTROL DERIVATIVES - - US UNITS

(BODY-FIXED FRL AXIS SYSTEM)

CASE 107 1 KT LEVEL FLIGHT AT SEA LEVEL 9500 LB MID CG

PHI	THETA	PSI	ALPHA	BETA	GAMMA	RPM	B1S	A1S	BTP
-1.11	-0.61	0.00	-0.61	1.11	0.00	15.41	-0.40	-1.92	10.04

XDOT	ZDOT	UB	VB	WB	VTP
1.69	0.00	1.69	0.00	-0.02	1.69

	U	W	Q	V	P	R	DC	DB	DA	DP
X	-0.0172	-0.0199	0.5536	-0.0242	-1.6769	-0.1599	-0.1345	1.1160	0.0366	-0.0295
Z	-0.0978	-0.1296	-3.0214	-0.0701	-0.1607	2.0979	-11.1163	0.1763	-0.0062	-0.0326
M	0.0010	-0.0139	-0.2979	0.0011	0.2455	0.0257	-0.0053	-0.1907	-0.0052	0.0115
Y	0.0196	-0.0036	-1.9068	-0.0526	-1.1775	0.7295	-2.4376	-0.0279	0.0788	1.3595
L'	0.0110	-0.0067	-0.9896	-0.0118	-1.8796	0.0393	-0.0685	-0.0195	0.5420	0.3706
N'	-0.0010	-0.0062	-0.1273	0.0161	-0.3701	-3.5965	0.4166	-0.0066	0.0136	-0.7660

CASE 108 60 KT LEVEL FLIGHT AT SEA LEVEL 9500 LB MID CG

PHI	THETA	PSI	ALPHA	BETA	GAMMA	RPM	B1S	A1S	BTP
-0.45	-2.03	0.00	-2.11	0.02	0.00	13.20	1.02	-1.70	1.07

XDOT	ZDOT	UB	VB	WB	VTP
101.27	0.00	101.20	0.04	-3.59	101.27

	U	W	Q	V	P	R	DC	DB	DA	DP
X	-0.0267	-0.0255	1.7046	-0.0069	-1.0296	-0.0915	-0.6066	1.1196	0.0277	-0.0562
Z	-0.1007	-0.6992	-1.1139	-0.0217	-1.2191	1.7352	-12.5557	2.4035	0.0913	-0.0611
M	0.0026	-0.0026	-0.3695	0.1002	0.1191	0.0237	0.0607	-0.1929	-0.0068	0.0191
Y	-0.0006	0.0012	-1.2611	-0.0001	-2.0539	1.0505	-0.0265	0.0267	0.0600	1.5053
L'	-0.0036	-0.0015	-0.6317	-0.0097	-1.1681	0.0652	0.3975	0.0290	0.5255	0.6006
N'	-0.0051	-0.0001	0.1119	0.0126	-0.1611	-0.8799	0.3671	0.0396	0.0276	-0.8670

CASE 109 100 KT LEVEL FLIGHT AT SEA LEVEL 9500 LB MID CG

PHI	THETA	PSI	ALPHA	BETA	GAMMA	RPM	B1S	A1S	BTP
-0.46	-2.97	0.00	-2.97	0.06	0.00	13.72	1.27	-1.42	2.41

XDOT	ZDOT	UB	VB	WB	VTP
168.78	0.00	168.55	0.11	-8.74	168.78

	U	W	Q	V	P	R	DC	DB	DA	DP
X	-0.0326	-0.0292	1.6797	-0.0378	-1.1670	-0.1167	-0.6671	1.1011	0.0195	-0.0002
Z	-0.1559	-0.8265	-2.6710	-0.0101	-2.1196	1.9505	-16.6720	6.4401	0.1615	-0.1001
M	0.0011	-0.0160	-0.6252	-0.0007	0.1021	0.0607	0.0151	-0.2035	-0.0361	0.5126
Y	0.0095	[illegible]	[illegible]	[illegible]	[illegible]	1.1116	-0.1119	[illegible]	[illegible]	1.6960
L'	[illegible]	[illegible]	[illegible]	[illegible]	[illegible]	[illegible]	[illegible]	[illegible]	[illegible]	[illegible]
N'	[illegible]	[illegible]	[illegible]	[illegible]	[illegible]	[illegible]	[illegible]	[illegible]	[illegible]	[illegible]

MICROFILMED FROM
BEST AVAILABLE COPY

TABLE IV-4 CONTINUED
AH-1G STABILITY AND CONTROL DERIVATIVES -- US UNITS
(BODY-FIXED FRL AXIS SYSTEM)

CASE 110 1 FT LEVEL FLIGHT AT SEA LEVEL 9500 LB FWD CG

PHI	THETA	PSI	ALPHA	BETA	GAMMA	RHO	B1S	A1S	RTP
-1.10	-1.10	0.00	-1.10	0.06	0.00	15.82	-2.84	-1.94	10.02

XDOT	ZDOT	UO	VO	WO	VTO
1.69	0.00	1.69	0.00	-0.09	1.69

	U	W	Q	V	P	R	DC	DB	DA	DP
X	-0.0225	-0.0169	0.5260	-0.0116	-1.6709	0.0915	-0.6288	1.3016	0.0411	-0.0056
Z	-0.1211	-0.3229	0.0220	-0.0761	0.0324	0.0924	-11.1085	0.1813	-0.0048	-0.0256
M	0.0309	-0.0041	-0.2921	0.0013	0.2461	0.0004	-0.0082	-0.1846	-0.0066	0.0079
Y	0.0186	-0.0039	-1.3916	-0.0521	-1.1611	0.7511	-0.4318	-0.0113	0.8884	1.3901
L'	0.0105	-0.0048	-0.4521	-0.0115	-0.6208	0.0525	-0.0531	-0.0058	0.5467	0.3865
N'	-0.0099	-0.0042	0.2552	0.0156	-0.3714	-0.5421	0.6241	-0.0051	0.0275	-0.7743

CASE 111 60 FT LEVEL FLIGHT AT SEA LEVEL 9500 LB FWD CG

PHI	THETA	PSI	ALPHA	BETA	GAMMA	RHO	B1S	A1S	RTP
-0.62	-4.29	0.00	-4.28	0.05	0.00	11.32	-1.09	-1.75	3.83

XDOT	ZDOT	UO	VO	WO	VTO
101.27	0.00	100.99	0.08	-7.56	101.27

	U	W	Q	V	P	R	DC	DB	DA	DP
X	-0.0124	-0.0520	1.4880	-0.0061	-1.5311	-0.0160	-1.1411	1.3797	0.0266	-0.0981
Z	-0.1220	-0.6954	-1.4891	-0.0229	-1.1369	1.7624	-12.5861	2.3938	0.0802	-0.1178
M	0.0026	-0.0033	-0.1460	0.0002	0.2029	0.0255	0.0194	-0.1821	-0.0041	0.0253
Y	-0.0007	0.0012	-1.2504	-0.0882	-2.0652	1.0936	-0.0328	0.0221	0.8514	1.5006
L'	-0.0036	-0.0013	-0.5116	-0.0105	-1.1536	0.0651	0.0994	0.0392	0.5272	0.4069
N'	-0.0055	-0.0080	0.6846	0.0131	-0.1119	-0.0549	0.3497	0.0402	0.0211	-0.8574

CASE 112 7 FT 720 FT/MIN SEA LEVEL 9500 LB FWD CG

PHI	THETA	PSI	ALPHA	BETA	GAMMA	RHO	B1S	A1S	RTP
-1.31	-2.27	0.00	-92.24	1.31	90.00	16.65	-2.19	-2.21	11.27

XDOT	ZDOT	UO	VO	WO	VTO
0.00	-12.00	-0.40	0.29	-11.99	12.00

	U	W	Q	V	P	R	DC	DB	DA	DP
X	-0.0222	-0.0180	0.6411	-0.0154	-1.7127	-0.0216	-0.5298	1.2614	-0.0020	-0.1310
Z	-0.0663	-0.0646	-0.0324	-0.0701	-0.0119	2.2611	-11.1729	0.1435	0.0012	0.0214
M	0.0039	-0.0065	-0.1061	0.0010	0.2502	0.0121	-0.0160	-0.1782	0.0024	0.0622
Y	0.0147	-0.0212	-1.9050	-0.0004	-1.0161	0.7526	-0.0167	-0.1004	0.8476	1.2447
L'	[illegible]	[illegible]	[illegible]	[illegible]	[illegible]	[illegible]	[illegible]	[illegible]	0.5249	0.2112
N'	[illegible]	[illegible]	[illegible]	[illegible]	[illegible]	[illegible]	[illegible]	[illegible]	0.1270	-0.7974

TABLE IV-4 CONTINUED

AH-1G STABILITY AND CONTROL DERIVATIVES -- US UNITS

(BODY-FIXED FRL AXIS SYSTEM)

CASE 113 [illegible] KT [illegible] FT/MIN SEA LEVEL 9500 LB FWD CG

PHI	THETA	PSI	ALPHA	BETA	GAMMA	A0R	B1S	A1S	θTP
-1.66	-1.9[illegible]	0.00	-19.79	0.69	17.[illegible]1	17.03	1.51	-1.09	8.62

XDOT	ZDOT	U0	V0	W0	VTO
97.74	-33.60	96.56	0.49	-34.76	102.66

	U	W	Q	V	P	R	DC	DB	DA	DP
X	-0.0257	-0.0280	0.9665	-0.0055	-1.4679	-2.0596	-0.7085	1.5510	0.0807	-0.0095
Z	-0.0768	-0.6937	-1.2957	-0.0428	-1.2951	2.6142	-12.7832	2.5671	0.2040	0.1905
M	0.0031	-0.0109	-3.1646	-0.0022	0.1724	0.0475	-0.1089	-0.1752	-0.0095	0.0667
Y	0.0017	-0.0180	-1.6645	-0.0969	-1.3342	1.1729	-0.1756	3.0996	0.9706	1.5631
L'	-0.0031	-0.3957	-0.7286	-0.0189	-0.7641	0.1655	0.0312	0.0672	0.5087	0.4524
N'	-0.0063	0.3082	0.3551	0.0116	-0.4090	-0.9650	0.7819	-0.0155	0.0242	-0.0333

CASE [illegible]4 60 KT -1590 FT/MIN SEA LEVEL 9500 LB FWD CG

PHI	THETA	PSI	ALPHA	BETA	GAMMA	A0R	B1S	A1S	θTP
-0.08	-5.32	0.00	9.95	-0.01	-15.17	10.07	-2.93	-0.70	-0.37

XDOT	ZDOT	U0	V0	W0	VTO
97.76	26.50	99.77	-0.03	17.33	101.27

	U	W	Q	V	P	R	DC	DB	DA	DP
X	-0.0309	-0.0571	2.1668	-0.0251	-1.6635	0.0215	-1.4038	1.3360	0.0290	-0.0360
Z	-0.1478	-0.6651	-1.8188	-0.0999	-3.6926	1.1779	-12.9629	2.1663	0.0816	-0.0922
M	0.0017	-0.0022	-0.4316	-0.0001	0.2083	0.0177	0.1678	-0.1720	-0.0082	0.0065
Y	-0.0015	0.0123	-1.1178	-0.0996	-2.7693	0.9357	0.2261	-0.0116	0.7840	1.5566
L'	-0.0076	0.0017	-0.4176	0.0001	-1.7378	0.0327	0.1553	0.0165	0.6897	0.6003
N'	-0.0050	-0.0176	0.7916	0.0130	-0.1926	-0.7900	0.3550	0.0739	0.0220	-0.9032

CASE 115 1 KT LEVEL FLIGHT AT SEA LEVEL 9500 LB AFT CG

PHI	THETA	PSI	ALPHA	BETA	GAMMA	A0R	B1S	A1S	θTP
-1.18	2.65	0.00	2.60	-0.05	0.00	15.01	2.77	-1.90	10.11

XDOT	ZDOT	U0	V0	W0	VTO
1.65	0.00	1.69	-0.00	0.08	1.69

	U	W	Q	V	P	R	DC	DB	DA	DP
X	-0.0111	0.0029	0.5455	-0.0201	-1.4256	-0.2966	0.5129	1.3613	0.0401	0.0000
Z	-0.0685	-0.3233	[illegible]	-0.0299	-0.3237	2.9964	-11.1129	3.1792	-0.0016	-0.0328
M	0.0010	[illegible]	-0.3121	0.0015	0.2179	0.0050	-0.0387	-0.2021	-0.0098	0.0001
Y	0.0295	[illegible]	-1.2620	[illegible]	-1.0061	0.0969	-0.1166	0.0698	0.9576	1.6067
L'	0.0123	-0.0030	-1.0611	-0.0112	-0.7616	0.1968	1.1100	0.0761	0.5992	0.5615
N'	-0.0006	-0.1962	-0.6917	0.0169	-0.3619	-0.5155	0.4191	0.0036	0.9468	-0.7380

TABLE IV-4 CONCLUDED
AH-IG STABILITY AND CONTROL DERIVATIVES -- US UNITS
(BODY-FIXED FRL AXIS SYSTEM)

CASE 116 60 KT LEVEL FLIGHT AT SEA LEVEL 9500 LB AFT CG

PHI	THETA	PSI	ALPHA	BETA	GAMMA	ΘMR	B1S	A1S	ΘTR
-0.69	0.82	0.00	0.82	-0.01	[illegible]	11.24	3.71	-1.81	3.13

XDOT	ZDOT	U0	V0	W0	VT0
101.27	0.00	101.26	-0.02	1.44	101.27

	U	W	Q	V	P	R	DC	DB	DA	DP
X	-0.0223	0.0285	1.9199	-0.0037	-1.3469	-0.2310	0.0622	1.2101	0.0145	-0.0585
Z	-0.0721	-0.7035	-0.6562	-0.0251	-1.1097	1.6565	-12.5387	2.5866	0.0760	-0.0708
M	0.0024	-0.0016	-0.1611	0.0002	0.1979	0.0244	0.3470	-0.2040	-0.0036	0.0177
Y	-0.0003	0.0010	-1.2315	-0.0912	-2.0461	1.0089	-0.0240	0.0275	0.8390	1.5121
L'	-0.0031	-0.0019	-0.7796	-0.0086	-1.3447	0.0661	0.0958	0.0259	0.5210	0.4127
N'	-0.0046	-0.0081	-0.1207	0.0116	-0.3561	-0.7989	0.3442	0.0389	0.0352	-0.8382

CASE 117 60 KT 1932 FT/MIN SEA LEVEL 9500 LB AFT CG

PHI	THETA	PSI	ALPHA	BETA	GAMMA	ΘMR	B1S	A1S	ΘTR
-1.53	2.74	0.00	-15.79	0.42	18.54	16.98	5.58	-3.16	8.50

XDOT	ZDOT	U0	V0	W0	VT0
96.01	-32.20	97.44	0.74	-27.56	101.27

	U	W	Q	V	P	R	DC	DB	DA	DP
X	-0.0287	0.0198	0.8285	-0.0015	-1.1289	-3.3572	0.4708	1.2623	0.0139	-0.1152
Z	-0.0355	-0.6925	-0.9914	-0.0453	-1.6084	2.3950	-12.6454	2.4730	0.1072	-0.0513
M	0.0033	-0.0053	-0.2737	-0.0001	0.1921	0.0391	0.0091	-0.2211	-0.0049	0.0558
Y	0.0032	-0.0172	-1.4341	-0.0934	-1.0199	1.2542	-0.1681	0.0979	0.9550	1.5679
L'	-0.0023	-0.0056	-0.9956	-0.0182	-0.7520	0.1910	0.0185	0.0434	0.5871	0.4652
N'	-0.0067	0.0079	-0.3513	0.0093	-0.5055	-0.9097	0.7545	-0.0260	0.0329	-0.8231

CASE 118 60 KT -1728 FT/MIN SEA LEVEL 9500 LB AFT CG

PHI	THETA	PSI	ALPHA	BETA	GAMMA	ΘMR	B1S	A1S	ΘTR
-0.09	-0.63	0.00	15.92	-0.02	-16.52	9.90	1.96	-0.75	-0.36

XDOT	ZDOT	U0	V0	W0	VT0
97.03	29.80	97.38	-0.04	27.78	101.27

	U	W	Q	V	P	R	DC	DB	DA	DP
X	-0.0161	-0.1196	2.6942	-0.0011	-1.1238	-6.1200	-0.1197	1.1672	0.0166	-0.0038
Z	-0.1026	-0.6179	-1.1911	-0.0116	-0.9189	1.1967	-12.1262	2.1215	0.0802	-0.0507
M	0.0321	-0.0059	-0.4657	-0.0002	0.2341	0.0199	0.0971	-0.1961	-0.0060	0.0029
Y	-0.0025	0.0111	-1.1456	-0.1115	-2.7561	0.0636	0.2211	-0.0263	0.2687	1.5181
L'	-0.0316	0.0027	[illegible]	[illegible]	[illegible]	0.0265	0.1534	0.0079	0.4456	0.1967
N'	[illegible]	-0.0176	-0.0101	0.0122	-0.2279	[illegible]	0.0551	0.0275	0.0101	-0.0702

TABLE IV-5

AH-IG TRANSFER FUNCTION FACTORS

CASE 56 -40 KT SCAS OFF

DENOMINATOR: (0) (.343) (1.11)[-.812;.281][-.380;.358][.816;.971]<.00363>

CONTROL NUMERATORS:

PHI/DA .477 (0) (-.484) (.953)[-.304;.334][.812;.622]<-.00956>
THE/DB -.154 (0) (.00490) (1.30)[-.818;.282][.981;.727]<-.415E-4>
PSI/DP -.819 (.386)[-.0141;.283][-.371;.362][.863;1.03]<-.00352>

PHI/DB -.0711 (0) (.0498) (-.271) (-.866) (1.03)[-.394;1.09]<-.00100>
THE/DA .0795 (0) (.0134)[-.822;.254][.992;.799]<.442E-4>

PHI/DA ;THE/DB -.0741 (0) (.00521) (-.475)[.999;.814]<.000121>
PHI/DA ;PSI/DP -.402 (.0243)[-.285;.352][.835;.612]<-.000455>
THE/DB ;PSI/DP .125 (.00461) (.600) (1.28)[-.0345;.292]<.378E-4>

PHI/DB ;PSI/DP .0679 (.0234)[-.438;.129][-.311;1.33]<.965E-4>
PHI/DP ;THE/DP -.0558 (0) (.00459) (.498)[.279;.795]<-.8[illegible]2E-4>
PHI/DC ;THE/DB .0234 (0) (.00475) (.890)[-.622;1.21]<.0[illegible]144>

THE/DA ;PSI/DP -.0663 (.0248) (.643)[.0743;.254]<-.680E-4>
THE/DP ;PHI/DA -.0159 (0) (.0248) (.450)[.305;.897]<-.000143>
THE/DC ;PHI/DA -.0128 (0) (.0135) (-.697) (.892) (2.19)<.000237>

PSI/DA ;THE/DB -.00532 (.00518) (.734) (1.40)[-.417;1.44]<-.590E-4>
PSI/DB ;PHI/DA -.0112 (.0237) (.239) (-.368)[.564;2.27]<.000120>
XD/DB ;PSI/DA .598 (0) (-.476) (.751) (.868)[-.0174;2.01]<-.747>

YD/DA ;THE/DB -.128 (.00518) (-.496)[.999;.810][-.00188;4.30]<.0039R>
ZD/DB ;PHI/DA -.871 (0) (-.0973) (-.477) (.961)[.0483;1.99]<-.154>
XD/DC ;PHI/DA .0519 (0) (-.687) (.899) (2.31)[.000225;2.76]<-.563>

YD/DP ;THE/DB -.248 (.00461) (.486)[.338;.777][.0896;2.76]<-.00255>
ZD/DC ;PHI/DA -6.44 (0) (.0484) (-.527) (.957)[.0893;.579]<.0529>

PHI/DA ;THE/DB ;PSI/DP .0620 (.00387) (.0241) (.682)<.399E-5>
PHI/DC ;THE/DB ;PSI/DP .0359 (.00428) (.0224)<.345E-5>
THE/DC ;PHI/DA ;PSI/DP .0166 (.00893) (.0244) (1.53)<.551E-5>

PSI/DC ;PHI/DA ;THE/DB -.0272 (.00274) (.0279) (.929)<-.193E-5>
XD/DB ;PHI/DA ;PSI/DP -.502 (.0244) (.673)[-.0166;2.01]<-.0331>
YD/DA ;THE/DB ;PSI/DP .112 (.00384) (.682)[-.00314;4.21]<.00521>

ZD/DC ;PHI/DA ;THE/DB .978 (0) (.0116) (-.456) (.871)<-.00448>
ZD/DC ;PHI/DA ;PSI/DP 5.43 (.0264) (.922)[.0410;.556]<.00542>
XD/DC ;PHI/DA ;THE/DB .00603 (0) (-.818) (.914) (1.89)<-.0114>

XD/DC ;PHI/DA ;PSI/DP -.0708 (.0234) (1.62)[.000932;2.67]<-.0190>
YD/DP ;PHI/DA ;THE/DB -.0728 (.00387) (.664)[.0451;1.29]<-.000269>
ZD/DB ;PHI/DA ;PSI/DP .733 (.0244) (-.0917)[.0429;1.98]<-.00642>

ZD/DC ;PHI/DA ;THE/DB ;PSI/DP -.608 (.00609) (.0254)<-.000125>
XD/DC ;PHI/DA ;THE/DB ;PSI/DP -.00976 (.0210) (1.14)<-.000234>

TABLE IV-5 CONTINUED
AH-1G TRANSFER FUNCTION FACTORS

CASE 57 -20KT SCAS OFF

DENOMINATOR: (0; (.295) (.892)[-.508;.338]X[-.434;.495]X[.887;.807]<.00479>

CONTROL NUMERATORS:

PHI/DA .510 (0) (-.352) (.881) (.566) (.808)[-.432;.436]<-.006E8>
THE/DB -.175 (0) (-.0125) (1.10)[-.525;.375]X[.956;.518]<.904E-4>
PSI/DP -.770 (.279)[-.0720;.329]X[-.413;.471]X[.904;.926]<-.00442>

PHI/DB .161 (0) (.171) (-.447) (.840)[-.113;.662]<-.00454>
THE/DA -.0176 (0) (.00267) (.498) (.712) (-4.57)[-.497;.276]<.580E-5>

PHI/DA ;THE/DB -.0891 (0) (-.00994) (-.368) (.502) (.757)<-.000124>
PHI/DA ;PSI/DP -.405 (.0160) (.402) (.629)[-.408;.437]<-.000312>
THE/DB ;PSI/DP .134 (-.0228) (.381) (1.03)[-.0770;.351]<-.000148>

PHI/DB ;PSI/DP -.105 (.0172) (.156)[-.234;.697]<-.000137>
PHI/DP ;THE/DB -.0630 (0) (-.0221) (.304)[.339;.608]<.000157>
PHI/DC ;THE/DB .0111 (0) (-.0111) (.628)[-.837;1.58]<-.000193>

THE/DA ;PSI/DP .0156 (.0487) (.476) (-4.19)[-.0756;.263]<-.000105>
THE/DP ;PHI/DA -.0223 (0) (.0542) (.521)[.165;.413]<-.000107>
THE/DC ;PHI/DA -.0153 (0) (-.00456) (.485) (-.698) (.958)<-.227E-4>

PSI/DA ;THE/DB -.00639 (-.0100) (.487) (1.24)[-.657;1.77]<.000122>
PSI/DB ;PHI/DA -.00413 (.0139) (.276) (-.641) (1.56) (6.27)<.992E-4>
XD/DB ;PHI/DA .710 (0) (-.366) (.514) (.760)[.000196;1.99]<-.805>

YD/DA ;THE/DB -.156 (-.0100) (-.382) (.504) (.748)[.00647;4.27]<-.00411>
ZD/DB ;PHI/DA -.411 (0) (-.411) (-.428) (.807)[.00905;1.90]<-.210>
XD/DC ;PHI/DA .112 (0) (.496) (-.652) (.956)[.0945;2.13]<-.157>

YD/DP ;THE/DB -.276 (-.0224) (.299)[.355;.608]X[.0653;2.71]<.00499>
ZD/DC ;PHI/DA -6.25 (0) (.285) (-.308) (.809)[-.341;.371]<.0611>

PHI/DA ;THE/DB ;PSI/DP .0707 (-.0138) (.0158) (.466)<-.718E-5>
PHI/DC ;THE/DB ;PSI/DP .021[illegible] (-.0101) (.0129) (1.50)<-.424E-5>
THE/DC ;PHI/DA ;PSI/DP .0229 (.0173) (-.0394) (.387)<-.604E-5>

PSI/DC ;PHI/DA ;THE/DB -.0410 (-.0109) (.0206) (.567)<.548E-5>
XD/DB ;PHI/DA ;PSI/DP -.563 (.0161) (.480)[.000128;1.99]<-.0173>
YD/DA ;THE/DB ;PSI/DP .130 (-.0141) (.465)[-.00247;4.18]<-.0148>

ZD/DC ;PHI/DA ;THE/DB 1.08 (0) (-.00687) (-.350) (.692)<.00180>
ZD/DC ;PHI/DA ;PSI/DP 4.98 (.0179) (.439)[-.313;.405]<.00643>
XD/DC ;PHI/DA ;THE/DB .00180 (0) (.158) (.993) (-5.30)<-.00150>

XD/DC ;PHI/DA ;PSI/DP -.164 (.0137) (.382)[.0981;2.09]<-.00172>
YD/DP ;PHI/DA ;THE/DB -.0843 (-.0136) (.445)[.0404;.689]<.000242>
ZD/DB ;PHI/DA ;PSI/DP .326 (.0163) (-.456)[.00633;1.86]<-.00836>

ZD/DC ;PHI/DA ;THE/DB ;PSI/DP -.850 (.0177) (-.0207)<.000310>
XD/DC ;PHI/DA ;THE/DB ;PSI/DP -.00330 (.0222) (-3.41)<.000249>

MICROFILMED FROM
BEST AVAILABLE COPY

TABLE IV-5 CONTINUED

AH-1G TRANSFER FUNCTION FACTORS

CASE 57 -20KT SCAS ON

DENOMINATOR: (0) (.0420) (.174) (.253) (.465) (.763) (2.93)[-.0690;.162][-.511;.185][.644;2.22][.727;3.42]<.000186>

CONTROL NUMERATORS:

PHI/DA .590 (0) (.0644) (-.122) (.167) (.253) (.466) (.761) (3.04) (5.75)[-.125;.179][.641;2.20]<-.000142>
THE/DB -.175 (0) (-.0169) (.0551) (.0699) (.174) (.464) (2.59)[-.495;.171][.646;2.22][.731;3.36]<.390E-5>
PSI/DP -.770 (.0374) (.135) (.253) (.465) (.762) (2.93) (4.01)[-.319;.366][-.0405;.179][.761;3.52]<-.942E-4>

PHI/DP .155 (0) (.0699) (-.155) (.368) (1.00) (2.59)[.972;.160][-.191;.636][.641;2.14]<-.950E-4>
THE/DA -.0176 (0) (.0644) (.0644) (.137) (.476) (-4.52) (5.75)[-.164;.312][.999;.428][.830;2.28]<.834E-6>

PHI/DA ;THE/DB -.0991 (0) (-.00977) (.0644) (.0699) (-.132) (.167) (.465) (2.59) (5.75)[.642;2.20]<-.256E-5>
PHI/DA ;PSI/DP -.495 (.0163) (.0644) (.0794) (.253) (.466) (.761) (3.04) (4.01) (5.75)[-.109;.179]<-.665E-5>
THE/DB ;PSI/DP .134 (-.0224) (.0699) (.0794) (.134) (.465) (2.59) (4.01)[-.281;.156][.747;3.45]<-.316E-5>

PHI/DB ;PSI/DP -.105 (.0172) (.0699) (.0794) (.156) (.370) (1.00) (2.59) (4.01)[-.234;.697]<-.293E-5>
PHI/DP ;THE/DB -.0610 (0) (-.0220) (.0699) (.0794) (.465) (2.59) (4.01)[.599;.223][.630;3.32]<.334E-5>
PHI/DC ;THE/DB .0111 (0) (-.0111) (.0699) (.163) (-.225) (.366) (.939) (2.59) (-5.46)[.845;1.63]<-.406E-5>

THE/DA ;PSI/DP .0156 (.0487) (.0644) (.0794) (.417) (.435) (.476) (4.01) (-4.19) (5.75)[-.0756;.263]<-.224E-5>
THE/DP ;PHI/DA -.0223 (0) (.0644) (.0743) (.0794) (.466) (4.01) (5.75)[.757;.174][.922;.925]<-.225E-5>
THE/DC ;PHI/DA -.0151 (0) (-.00347) (.0644) (.152) (-.259) (.353) (5.75)[.949;.436][.591;2.72]<-.435E-6>

PSI/DA ;THE/DP -.00639 (-.0100) (.0644) (.0699) (.487) (.561) (.596) (1.28) (2.59) (5.75)[-.657;1.77]<.260E-5>
PSI/DB ;PHI/DA -.00613 (.0139) (.0644) (.0699) (.253) (.500) (-.671) (.852) (1.29) (2.59) (5.75) (5.97)<.212E-5>
ZD/DB ;PHI/DA .710 (0) (.0644) (.0699) (-.129) (.148) (.483) (2.59) (5.75)[.000731;1.99][.642;2.20]<-.00041>

ZD/DA ;THE/DP -.156 (-.03993) (.0644) (.0699) (.142) (-.144) (.455) (2.59) (5.75)[.635;2.21][.0150;4.26]<-.476E-4>
ZD/DB ;PHI/DA -.411 (0) (.0644) (.0699) (-.134) (.150) (-.454) (2.59) (5.75)[.0203;1.47][.635;2.19]<-.00036>
ZD/DC ;PHI/DA .112 (0) (.0644) (.171) (-.269) (.623) (5.75)[.942;.291][.0172;2.52][.607;2.62]<-.00340>

ZD/DP ;THE/DP -.276 (-.0223) (.0699) (.0794) (.469) (2.59) (4.01)[.540;.197][.328;1.21][.423;3.34]<.000107>
ZD/DC ;PHI/DA -6.25 (0) (.0644) (-.0764) (.121) (.246) (.783) (2.96) (5.75)[-.179;.140][.629;2.18]<.00116>

PHI/DA ;THE/DB ;PSI/DP .0707 (-.0139) (.0158) (.0644) (.0699) (.0794) (.466) (2.59) (4.01) (5.75)<-.153E-6>
PHI/DC ;THE/DB ;PSI/DP .0216 (-.0101) (.0129) (.0699) (.0794) (.370) (1.00) (1.59) (2.59) (4.01)<-.905E-7>
THE/DC ;PHI/DA ;PSI/DP .0229 (.0173) (-.0394) (.0644) (.0794) (.387) (.417) (.435) (4.01) (5.75)<-.129E-6>

PSI/DC ;PHI/DA ;THE/DB -.0430 (-.0109) (.0206) (.0644) (.0699) (.541) (.567) (.588) (2.59) (5.75)<.117E-6>
ZD/DB ;PHI/DA ;PSI/DP -.561 (.0161) (.0644) (.0699) (.0794) (.440) (2.59) (4.01) (5.75)[.000127;1.99]<-.000369>
ZD/DA ;THE/DB ;PSI/DP .130 (-.0141) (.0644) (.0699) (.0794) (.465) (2.59) (4.01) (5.75)[-.00287;4.18]<-.000116>

ZD/DC ;PHI/DA ;THE/DB 1.09 (0) (-.00606) (.0644) (.0699) (-.123) (.133) (2.59) (5.75)[.627;2.18]<.342E-4>
ZD/DC ;PHI/DA ;PSI/DP 4.48 (.0179) (.0644) (.0794) (.244) (.763) (2.93) (4.01) (5.75)[-.0799;.153]<.000137>
ZD/DC ;PHI/DA ;THE/DB .00180 (0) (.0644) (.0699) (2.59) (-4.51) (5.75)[.682;.0841][.715;3.03]<-.356E-4>

ZD/DC ;PHI/DA ;PSI/DP -.164 (.0136) (.0644) (.0794) (.620) (4.01) (5.75)[.945;.295][.0262;2.37]<-.794E-4>
ZD/DP ;PHI/DA ;THE/DB -.0843 (-.0136) (.0644) (.0699) (.0794) (.445) (2.59) (4.01) (5.75)[.0404;.649]<.517E-5>
ZD/DB ;PHI/DA ;PSI/DP .326 (.0163) (.0644) (.0699) (.0794) (-.456) (2.59) (4.01) (5.75)[.00633;1.86]<-.000178>

ZD/DC ;PHI/DA ;THE/DB ;PSI/DP -.850 (.0177) (-.0237) (.0644) (.0699) (.0794) (2.59) (4.01) (5.75)<.662E-5>
ZD/DC ;PHI/DA ;THE/DB ;PSI/DP -.00336 (.0222) (.0644) (.0699) (.0794) (2.59) (-3.41) (4.01) (5.75)<.532E-5>

TABLE IV-5 CONTINUED
AH-1G TRANSFER FUNCTION FACTORS

CASE 59 HOVER SCAS OFF

DENOMINATOR. (0) (.440) (.821)[-.291;.359][-.243;.542][.837;.712]<.00694>
HD P PL

CONTROL NUMERATORS:

PHI/DA .471 (0) (.0735) (.516)[-.430;.283][.881;.482]<.000331>
THE/DB -.146 (0) (.0155) (1.13)[.980;.471][-.212;.525]<-.000157>
PSI/DP -.813 (.720)[-.0458;.402][-.460;.424][.848;.720]<-.00883>

PHI/DB -.0685 (0) (.0721) (-2.29)[.988;.468][.103;.513]<.000651>
PHI/DP .192 (0) (-.187) (.319)[-.194;.267][.817;.693]<-.000392>
PHI/DC -.0999 (0) (.0260) (.459)[-.360;.614][.505;.710]<-.000227>

THE/DA .109 (0) (-.0153) (.358) (.647)[-.0525;.485]<-.908E-4>
THE/DP .0160 (0) (.0126) (2.78)[-.0811;.475][.806;.658]<.548E-4>
THE/DC .0192 (0) (.0443) (.477)[-.218;.549][.852;1.74]<.000370>

PSI/DA .0319 (1.13) (-1.55) (-4.32)[-.412;.287][.930;.492]<.00481>
PSI/DP -.00654 (.488) (1.14) (-1.37)[.111;.498][-.942;2.77]<.00945>
PSI/DC .579 (.245)[.500;.110][-.285;.558][.938;.830]<.000367>

XD/DB 1.24 (0) (1.15)[.977;.464][-.209;.520][.0469;1.96]<.320>
YD/DA .809 (.0588) (.504)[-.429;.283][.876;.477][.0172;4.31]<.00813>
ZD/DC -12.7 (0) (.489)[-.147;.268][-.250;.551][.918;.747]<-.0757>

XD/DC -.0934 (0) (.477)[-.213;.547][.803;1.17][-.473;3.26]<-.267>
YD/DP 1.28 (-.196) (.341)[-.213;.274][.815;.697][.0185;2.18]<-.0149>
ZD/DB .198 (0) (.416) (1.47) (-1.57)[-.101;.522][.211;1.57]<-.127>

PHI/DA ;THE/DB -.0686 (0) (-.00100) (.0726)[.987;.458]<.103E-5>
PHI/DA ;PSI/DP -.388 (.0217)[-.427;.281][.904;.474]<-.000149>
THE/DB ;PSI/DP .119 (.0180) (.331) (1.13)[-.132;.395]<.000125>

PHI/DB ;PSI/DP .0569 (.0209) (.429) (-2.29)[.0912;.503]<-.000295>
PHI/DP ;THE/DB -.0270 (0) (.0183) (-.0260)[.979;.539]<.374E-5>
PHI/DC ;THE/DB .0159 (0) (.0368) (-.274)[.957;.429]<-.296E-4>

THE/DA ;PSI/DP -.0877 (-.00744) (.507)[-.101;.485]<.776E-4>
THE/DP ;PHI/DA .00673 (0) (-.00421) (.191)[.0124;.682]<-.252E-5>
THE/DC ;PHI/DA .00945 (0) (.431) (3.01)[.821;.0346]<.147E-4>

PSI/DA ;THE/DB -.00464 (0) (.422) (1.14) (-1.55) (-4.36)<-.0150>
PSI/DB ;PHI/DA -.000893 (.00215) (.101) (1.38)[-.695;1.78]<-.846E-6>
PSI/DC ;THE/DB -.0846 (.0436) (.563) (1.13)[-.288;.467]<-.000513>

PSI/DC ;PHI/DA .276 (.0273)[-.421;.295][.926;.517]<.000175>
XD/DB ;PHI/DA .583 (0) (.0728)[988;.447][.0469;1.95]<.0321>
XD/DB ;PSI/DP -1.01 (.306) (1.16)[-.117;.391][.0471;1.96]<-.210>

YD/DA ;THE/DB -.118 (0) (.0586)[.984;.444][.0173;8.30]<-.0252>
YD/DA ;PSI/DP -.698 [-.426;.281][.902;.473][-.0128;4.23]<-.222>
ZD/DC ;PHI/DA -6.00 (0) (.499)[-.380;.116][.560;.236]<-.00224>

ZD/DC ;THE/DB 1.86 (0) (.0327) (.472) (1.11)[-.235;.516]<.00851>
ZD/DC ;PSI/DP 10.4 [-.0881;.282][-.251;.443][.912;.774]<.0971>
XD/DC ;PHI/DA -.0452 (0) (.0479) (.427) (2.01)[-.291;3.17]<-.0186>

XD/DC ;THE/DB -.0102 (0) (.475) (1.01) (7.37)[-.110;.552]<-.0110>
XD/DC ;PSI/DP .160 [-.134;.409][.919;1.37][-.233;2.64]<.348>
YD/DP ;PHI/DA .448 (.125) (-.263)[-.437;.283][.903;.462]<-.000252>

YD/DP ;THE/DB -.186 (.0168) (-.0490)[1.00;.556][.00876;2.12]<.000212>
ZD/DB ;PHI/DA .0918 (0) (.0730) (.528) (-1.51)[.348;1.37]<-.0100>
ZD/DB ;PSI/DP -.161 (-1.57) (1.58)[-.0522;.465][.171;1.46]<.183>

PHI/DA ;THE/DB ;PSI/DP .0566 (-.00102) (.0209) (.391)<-.470E-6>
PHI/DC ;THE/DB ;PSI/DP .00265 (.0213) (.0612) (3.30)<.114E-4>
THE/DC ;PHI/DA ;PSI/DP -.0117 (.00838) (.0294) (1.83)<-.510E-5>

TABLE iV-5 CONTINUED
AH-IG TRANSFER FUNCTION FACTORS

CASE 59 HOVER SCAS OFF

CONTROL NUMERATORS CONCLUDED:

```
PSI/DC ;PHI/DA ;THE/DB  -.0402 (-.00111) (.0270) (.484) <.580E-6>

XD/DB ;PHI/DA ;PSI/DP  -.481 (.0211) (.378)[.0469;1.95]<-.0145>
YD/DA ;THE/DB ;PSI/DP   .102 (-.00114) (.389)[-.0128;4.23]<-.000808>
ZD/DC ;PHI/DA ;THE/DB   .873 (0) (.0221) (.0548) (.414) <.000438>

ZD/DC ;THE/DB ;PSI/DP  -1.52 (.0379) (1.12)[-.190;.417]<-.0112>
ZD/DC ;PHI/DA ;PSI/DP   4.97 (.00679) (.268)[-.0428;.129]<.000151>
XD/DC ;PHI/DA ;THE/DB  -.00512 (0) (.105) (.404) (6.85) <-.00148>

XD/DC ;PHI/DA ;PSI/DP   .0757 (.0252) (1.35)[-.275;2.61]<.0174>
XD/DC ;THE/DB ;PSI/DP   .00749 (1.08) (8.33)[-.141;.306]<.00631>
YD/DP ;PHI/DA ;THE/DB  -.0653 (0) (.121) (-.269) (.368) <.000784>

ZD/DB ;PHI/DA ;PSI/DP  -.0759 (.0215) (-1.50)[.365;1.36]<.00452>

ZD/DC ;PHI/DA ;THE/DB ;PSI/DP  -.722 (.00845) (.0262) <-.000160>
XD/DC ;PHI/DA ;THE/DB ;PSI/DP   .00351 (.0194) (8.41) <.000571>
```

GUST NUMERATORS:

```
PHI/UG  -.00861 (0) (0) (0) (.0376) (.106)[.979;.543]<-.101E-4>
THE/UG  -.000511 (0) (0) (.500) (.656) (5.22)[-.114;.497]<-.000216>
PSI/UG   .00110 (0) (0) (.0610) (.617) (-.911) (1.68) (2.42) <-.000154>

PHI/VG   .00901 (0) (0) (.419)[-.344;.365][.841;.656]<.000216>
THE/VG  -.000904 (0) (0) (0) (.0708) (-.833)[.813;.518]<.143E-4>
PSI/VG  -.0157 (0) (0) (.598)[-.367;.385][.838;.790]<-.000866>

PHI/WG   .00569 (0) (0) (.0628) (.527) (-.702)[.323;.472]<-.295E-4>
THE/WG   .00342 (0) (0) (.0401) (.567) (1.35)[-.182;.523]<.288E-4>
PSI/WG   .00494 (0) (-.360) (.997)[.477;.437][-.251;.983]<-.000326>

PHI/PG   .761 (0) (.0809) (.730)[-.301;.394][.942;.505]<.00178>
THE/PG  -.222 (0) (.0840) (.790)[.740;.352][-.441;.502]<-.000461>
PSI/PG   .392 (.905)[-.303;.389][.958;.654][-.523;1.10]<.0278>

PHI/QG   1.05 (0) (.0510) (.239) (-.118) (.493)[.675;.370]<-.000276>
THE/QG   .237 (0) (.0145) (.391) (.582) (1.90)[-.138;.515]<.000394>
PSI/QG   .122 (-.276) (.328) (1.11)[.720;.292][-.884;2.05]<-.00439>

PHI/RG   .0220 (0) (.328) (1.95)[-.412;.329][.286;.488]<.000364>
THE/RG  -.0143 (0) (0) (.0585) (-.555) (1.03)[-.124;.498]<.000119>
PSI/RG   .540 (.741)[-.289;.349][-.272;.565][.893;.668]<.00694>

XD/UG    .0148 (0) (.517) (.627) (2.41)[-.104;.482][-.154;1.61]<.00694>
ZD/UG    .117 (0) (0) (.0472) (1.05)[.887;.374][-.0948;.670]<.000364>
YD/VG    .0573 (0) (.421)[-.342;.365][.836;.654][.0636;2.25]<.00694>

XD/WG    .0104 (0) (0) (.569) (-3.62)[-.180;.517][.950;2.01]<-.0232>
ZD/WG    .372 (0) (.519)[-.161;.391][-.316;.553][.904;.877]<.00694>

PHI/UG ;THE/DB    .00121 (0) (0) (.0720)[.989;.479]<.202E-4>
PHI/UG ;PSI/DP    .00679 (0) (0) (.0136) (.0796) (.574) <.422E-5>
THE/UG ;PHI/DA   -.000205 (0) (0) (.0736) (.617) (1.11) <-.103E-4>

THE/UG ;PSI/DP    .000198 (0) (.629) (5.27)[-.112;.457]<.000274>
PSI/UG ;PHI/DA    .000792 (-.00766)[.0890;.00136][.785;.220]<-.544E-12>
PSI/UG ;THE/DB   -.000164 (0) (.572) (-.945) (1.15) (2.88) <.000294>

PHI/VG ;THE/DB   -.00138 (0) (0) (.0155)[.976;.479]<-.488E-5>
PHI/VG ;PSI/DP   -.00431 (0)[-.317;.412][.860;.612]<-.000274>
THE/VG ;PHI/DA   -.000462 (0) (0) (-.0154) (.338) (1.17) <.282E-5>

THE/VG ;PSI/DP    .000985 (0) (0) (-.0364)[.549;.564]<-.114E-4>
PSI/VG ;PHI/DA   -.00766 (0)[-.417;.290][.917;.492]<-.000150>
PSI/VG ;THE/DB    .00229 (0) (0) (0) (.399) (1.13) <.00103>
```

TABLE IV-5 CONTINUED
AH-IG TRANSFER FUNCTION FACTORS

CASE 59 HOVER SCAS OFF

GUST NUMERATORS CONTINUED:

```
PHI/WG ;THE/DB  -.000598 (0) (0) (.0538) (.145) (.437)<-.204E-5>
PHI/WG ;PSI/DP  -.00557 (0) (.0281) (-.622)[.362;.443]<.191E-4>
THE/WG ;PHI/DA   .00159 (0) (0) (.0178) (.0659) (.532)<.989E-6>

THE/WG ;PSI/DP  -.00286 (0) (.0483) (1.40)[-.146;.420]<-.341E-4>
PSI/WG ;PHI/DA   .00214 (0) (.0423) (.455)[-.363;.344]<.490E-5>
PSI/WG ;THE/DB  -.000701 (0) (.0620) (1.14)[-.370;.803]<-.319E-4>

PHI/PG ;THE/DB  -.127 (0) (-.00147) (.0808)[.990;.444]<.297E-5>
PHI/PG ;PSI/DP  -.694 (.0197)[-.309;.382][.975;.591]<-.000695>
THE/PG ;PHI/DA  -.108 (0) (0) (.0810)[.958;.452]<-.00178>

THE/PG ;PSI/DP   .174 (-.0391) (-.377) (.649)[.188;.469]<.000367>
PSI/PG ;PHI/DA   .160 (.0368)[-.547;.235][.839;.530]<.911E-4>
PSI/PG ;THE/DB  -.0588 (0) (.408) (1.14)[-.482;1.10]<-.0332>

PHI/QG ;THE/DB  -.138 (0) (.0143) (.0763)[.987;.451]<-.307E-4>
PHI/QG ;PSI/DP  -.881 (.0127) (.251) (-.314)[.669;.342]<.000104>
THE/QG ;PHI/DA   .107 (0) (.0103) (.0685)[.994;.448]<.152E-4>

THE/QG ;PSI/DP  -.194 (.0146) (.436) (1.93)[-.140;.442]<-.000467>
PSI/QG ;PHI/DA   .0238 (-.0165) (.170) (.762)[-.464;.591]<-.177E-4>
PSI/QG ;THE/DB  -.0163 (.0143) (.414) (1.14)[-.890;2.00]<-.000438>

PHI/RG ;THE/DB  -.00420 (0) (.0153) (.565)[.450;.476]<-.825E-5>
PHI/RG ;PSI/DP  -.121 (.0580) (.269) (.635)[-.370;.243]<-.712E-4>
THE/RG ;PHI/DA  -.00681 (0) (-.0157) (.254)[-.285;.419]<.477E-5>

THE/RG ;PSI/DP  -.0302 (.0123) (.671)[-.0860;.469]<-.548E-4>
PSI/RG ;PHI/DA   .253 (.0167)[-.428;.282][.906;.483]<.785E-4>
PSI/RG ;THE/DB  -.0790 (.0153) (.394) (1.13)[-.241;.539]<-.000157>

 XD/UG ;PHI/DA   .00685 (0) (.0736)[.999;.696][-.172;1.16]<.000331>
 XD/UG ;THE/DB  -.00153 (0) (.307) (.401) (1.31)[-.390;.798]<-.000157>
 XD/UG ;PSI/DP  -.0119 (.619) (2.41)[-.109;.445][-.152;1.58]<-.00883>

 ZD/UG ;PHI/DA   .0547 (0) (0) (.195) (.532)[.994;.0553]<.174E-4>
 ZD/UG ;THE/DB  -.0170 (0) (0) (.461) (1.24)[-.167;.640]<-.00397>
 ZD/UG ;PSI/DP  -.0947 (0) (.0467) (.292) (.986)[-.149;.603]<-.000463>

 YD/VG ;PHI/DA   .0197 (0) (.253)[-.436;.280][.911;.448]<.785E-4>
 YD/VG ;THE/DB  -.00848 (0) (.0155)[.978;.485][.0894;2.25]<-.000157>
 YD/VG ;PSI/DP  -.0264 [-.321;.414][.856;.607][.0963;2.30]<-.00883>

 XD/WG ;PHI/DA   .00496 (0) (0) (.0691) (.533) (-3.09) (3.32)<-.00187>
 XD/WG ;THE/DB  -.00576 (0) (0) (.553) (1.08)[-.187;.482]<-.000803>
 XD/WG ;PSI/DP  -.00772 (0) (-3.92)[-.132;.411][.938;2.11]<.0227>

 ZD/WG ;PHI/DA   .175 (0) (.0741) (.461) (.532)[-.346;.321]<.000331>
 ZD/WG ;THE/DB  -.0551 (0) (.0160) (.609) (1.10)[-.230;.515]<-.000157>
 ZD/WG ;PSI/DP  -.302 [.0352;.399][-.481;.479][.875;.894]<-.00883>

 XD/UG ; ZD/DC  -.178 (0) (.473) (2.62)[-.00342;.392][-.129;1.50]<-.0757>
 YD/VG ; ZD/DC  -.649 (0)[-.211;.289][.954;.517][.0675;2.29]<-.0757>

PHI/UG ;THE/DB ;PSI/DP  -.000966 (0) (.0209) (.454)<-.916E-5>
THE/UG ;PHI/DA ;PSI/DP   .000158 (0) (.0217) (1.35)<.464E-5>
PSI/UG ;PHI/DA ;THE/DB  -.000116 (0) (.00215) (.106)<-.263E-7>

PHI/VG ;THE/DB ;PSI/DP   .000700 (0) (.0180) (.309)<.390E-5>
THE/VG ;PHI/DA ;PSI/DP   .000491 (0) (-.00744) (.660)<-.241E-5>
PSI/VG ;PHI/DA ;THE/DB   .00112 (0) (0) (.418)<.000467>

PHI/WG ;THE/DB ;PSI/DP   .000616 (0) (.0213) (.0662)<.867E-6>
THE/WG ;PHI/DA ;PSI/DP  -.00134 (0) (.00983) (.0310)<-.409E-6>
PSI/WG ;PHI/DA ;THE/DB  -.000309 (0) (-.00128) (.0448)<.177E-7>
```

TABLE IV-5 CONTINUED
AH-IG TRANSFER FUNCTION FACTORS

CASE 59 HOVER SCAS OFF

GUST NUMERATORS CONCLUDED:

```
 PHI/PG ;THE/DB ;PSI/DP    .114 (-.00259) (.0208) (.391)<-.240E-5>
 THE/PG ;PHI/DA ;PSI/DP    .0867 (0) (.0182) (.389)<.000614>
 PSI/PG ;PHI/DA ;THE/DB   -.0236 (0) (.0311) (.392)<-.000288>

 PHI/QG ;THE/DB ;PSI/DP    .115 (.0148) (.0214) (.387)<.141E-4>
 THE/QG ;PHI/DA ;PSI/DP   -.0887 (.180)[.973;.0144]<-.699E-5>
 PSI/QG ;PHI/DA ;THE/DB   -.00327 (0) (-.0720) (.340)<.800E-4>

 PHI/RG ;THE/DB ;PSI/DP    .0180 (.0151) (.0230) (.454)<.284E-5>
 THE/RG ;PHI/DA ;PSI/DP    .00200 (-.972)[.439;.0282]<-.155E-5>
 PSI/RG ;PHI/DA ;THE/DB   -.0369 (-.00107) (.0160) (.407)<.256E-6>

  XD/UG ;PHI/DA ;THE/DB   -.000744 (0) (-.0399) (.0690) (.502)<.103E-5>
  XD/UG ;PHI/DA ;PSI/DP   -.00554 (.0217) (.918)[-.176;1.16]<-.000149>
  XD/UG ;THE/DB ;PSI/DP    .00124 (.142) (1.31)[-.362;.736]<.000125>

  ZD/UG ;PHI/DA ;THE/DB   -.00793 (0) (0) (.0730) (.537)<-.010311>
  ZD/UG ;PHI/DA ;PSI/DP   -.0451 (0) (.0231) (.0404) (.186)<-.784E-5>
  ZD/UG ;THE/DB ;PSI/DP    .0138 (0) (1.24)[-.220;.577]<.00570>

  YD/VG ;PHI/DA ;THE/DB   -.00286 (0) (-.00105) (.221) (.385)<.256E-6>
  YD/VG ;PHI/DA ;PSI/DP   -.00893 (-.449;.280)(.891;.462)<-.000149>
  YD/VG ;THE/DB ;PSI/DP    .00399 (.0181) (.306)[.135;2.38]<.000125>

  XD/WG ;PHI/DA ;THE/DB   -.00269 (0) (0) (.0764) (.496)<-.000102>
  XD/WG ;PHI/DA ;PSI/DP   -.00379 (0) (.0254) (-3.21) (3.54)<.00110>
  XD/WG ;THE/DB ;PSI/DP    .00468 (0) (1.06)[-.120;.313]<.000487>

  ZD/WG ;PHI/DA ;THE/DB   -.0258 (0) (-.00103) (.0724) (.532)<.103E-5>
  ZD/WG ;PHI/DA ;PSI/DP   -.145 (.0216) (.461)[-.348;.322]<-.000149>
  ZD/WG ;THE/DB ;PSI/DP    .0448 (.0193) (1.09)[-.168;.365]<.000125>

  XD/UG ; ZD/DC ;PHI/DA   -.0820 (0)[-.0257;.197](.372;.838]<-.00224>
  XD/UG ; ZD/DC ;THE/DB    .0206 (0) (.471) (1.35)[-.298;.806]<.008511>
  XD/UG ; ZD/DC ;PSI/DP    .133 (2.62)[.0410;.372](-.137;1.42]<.09711>

  YD/VG ; ZD/DC ;PHI/DA   -.221 (0) (-.105) (.437)[.251;.249]<.000629>
  YD/VG ; ZD/DC ;THE/DB    .0960 (0) (.0327) (.520)[.0939;2.28]<.008511>
  YD/VG ; ZD/DC ;PSI/DP    .347 (.574)[-.182;.298](.0880;2.34]<.09711>

  XD/UG ;PHI/DA ;THE/DB ;PSI/DP    .000612 (.0190) (-.0403)<-.470E-6>
  ZD/UG ;PHI/DA ;THE/DB ;PSI/DP    .00655 (0) (.0215)<.000140>
  YD/VG ;PHI/DA ;THE/DB ;PSI/DP    .00130 (-.00101) (.358)<-.470E-6>

  XD/WG ;PHI/DA ;THE/DB ;PSI/DP    .00221 (0) (.0196)<.433E-4>
  ZD/WG ;PHI/DA ;THE/DB ;PSI/DP    .0211 (-.00105) (.0211)<-.470E-6>
  XD/UG ; ZD/DC ;PHI/DA ;THE/DB    .0101 (0) (.131) (.331)<.000438>

  YD/VG ; ZD/DC ;PHI/DA ;THE/DB    .0321 (0) (.00432) (.227)<.115E-4>
  YD/VG ; ZD/DC ;PHI/DA ;PSI/DP    .116 (.212)[.117;.0785]<.000151>
  XD/WG ; ZD/DC ;PHI/DA ;THE/DB    .0361 (0) (.119) (.345)<.00148>

  XD/UG ; ZD/DC ;PHI/DA ;THE/DB ;PSI/DP  -.00921 (.0195)<-.000160>
  YD/VG ; ZD/DC ;PHI/DA ;THE/DB ;PSI/DP  -.0169 (.00951)<-.000160>
  XD/WG ; ZD/DC ;PHI/DA ;THE/DB ;PSI/DP  -.0295 (.0193)<-.000571>
```

MICROFILMED FROM
BEST AVAILABLE COPY

TABLE IV-5 CONTINUED
AH-IG TRANSFER FUNCTION FACTORS

CASE 59 HOVER SCAS ON

DENOMINATOR: (0) (.0781) (.207) (.247) (.399) (.802) (2.39)[.126;.195]X[-.508;.218]X[.647;2.32]X[.717;3.35]<.000329>
HD P PL

CONTROL NUMERATORS:

PHI/DA .471 (0) (.0644) (.262) (.399) (.803) (2.52) (5.75)[.838;.3555]X[-.166;.124]X[.642;2.30]<.905E-5>
THE/DB -.186 (0) (.0362) (.0699) (.0795) (.134) (.995) (2.59)[-.272;.204]X[.647;2.33]X[.719;3.79]<-.5022-5>
PSI/DP -.813 (.0794) (.237) (.247) (.389) (.802) (2.40) (4.01)[.166;.192]X[-.535;.210]X[.718;3.42]<-.000188>

PHI/DB -.0685 (0) (.0699) (.369) (.439) (.988) (-2.28) (2.59)[.842;.0541]X[.0984;.505]X[.641;2.31]<.1787-4>
PHI/DP .182 (0) (-.0457) (.0794) (.237) (.265) (.391) (.796) (1.97) (4.01)[-.101;.181]X[.494;1.18]<-.6408-5>
PHI/DC -.0999 (0) (.0263) (.0799) (.369) (-.512) (-.711) (2.22)[.891;.285]X[.996;.974]X[.814;1.52]<-.1128-4>

THE/DA .112 (0) (-.00835) (.3644) (.0747) (.417) (.436) (.507) (5.75)[-.183;.513]X[.636;2.21]<-.3078-5>
THE/DP .0160 (0) (.00738) (.0794) (.207) (-.384) (.393) (.796) (1.96) (4.01)[.537;.152]X[.861;3.71]<.3338-6>
THE/DC .0192 (0) (.0442) (.0775) (.167) (.419) (.433) (3.01)[-.296;.224]X[.843;1.75]X[.682;4.37]<.1769-4>

PSI/DA .0319 (.0644) (.258) (.422) (.536) (.621) (.719) (1.21) (-1.53) (2.59) (-4.36) (5.75)[-.148;.727]<.000103>
PSI/DB -.00656 (.0699) (.291) (1.66) (2.59) (-4.69)[.399;.401]X[.969;.414]X[-.754;1.04]X[.320;1.59]<.0002202>
PSI/DC .579 (.132) (.261) (.479) (.821) (2.38)[.655;.0417]X[-.317;.257]X[.998;.559]X[.732;3.41]<.7848-5>

ID/DB 1.24 (0) (.0699) (.0958) (.136) (.377) (2.59)[-.245;.200]X[.0466;1.95]X[.647;2.33]X[.738;3.24]<.009619>
YD/DA .809 (.0644) (.262) (.388) (.803) (2.52) (5.75)[.829;.0426]X[-.167;.125]X[.631;2.34]X[.0239;4.25]<.0001733>
ID/DC -12.7 (0) (.0769) (.795) (2.39)[.163;.129]X[.997;.209]X[-.394;.209]X[.833;2.30]X[.717;3.36]<-.0035%>

ID/DC -.0934 (0) (.0777) (.176) (.329) (.805) (2.82)[-.240;.218]X[.795,1.97]X[-.638;2.41]X[.601;4.17]<-.0129>
YD/DP 1.28 (-.0677) (.0794) (.237) (.282) (.378) (.796) (2.25) (4.01)[-.0963;.196]X[.248;.843]X[.555;3.27]<-.0003118>
ID/DB .198 (0) (.0631) (.0699) (.201) (-1.53) (2.59)[-.191;.258]X[.369;1.44]X[.686;2.30]X[.698;3.19]<-.005169>

PHI/DA ;THE/DB -.3686 (0) (-.00100) (.0644) (.0699) (.398) (2.59) (5.75)[.883;.0544]X[.643;2.30]<.2827-7>
PHI/DA ;PSI/DP -.164 (.0217) (.0644) (.0794) (.262) (.390) (.803) (2.52) (4.01) (5.75)[-.164;.125]<-.3198-5>
THE/DB ;PSI/DP .119 (.0180) (.0699) (.0794) (.146) (.398) (2.59) (4.01)[-.276;.187]X[.748;3.31]<.2688-5>

PHI/DB ;PSI/DP .3569 (.0209) (.0699) (.0794) (.370) (.429) (1.00) (-2.29) (2.59) (4.01)[.0912;.503]<-.6298-5>
PHI/DP ;THE/DB -.0278 (0) (.0183) (-.0249) (.0699) (.0794) (.197) (.393) (2.59) (4.01)[.823;1.20]<.7948-7>
PHI/DC ;THE/DB .0159 (0) (.0371) (.0699) (.368) (.959) (-1.12) (2.59)[.679;.0852]X[.823;1.60]<-.7848-6>

THE/DA ;PSI/DP -.0877 (-.00744) (.0644) (.0794) (.417) (.435) (.507) (4.01) (5.75)[-.181;.485]<.1668-5>
THE/DP ;PHI/DA .00673 (0) (-.00561) (.0644) (-.0709) (.0794) (.214) (.393) (.642) (-2.98) (4.01) (5.75)<-.5068-7>
THE/DC ;PHI/DA .00945 (0) (.0644) (.0699) (.419) (.433) (4.99) (5.75)[.844;.0236]X[.650;1.75]<.3808-6>

PSI/DA ;THE/DB -.00560 (0) (.0644) (.0699) (.422) (.541) (.588) (1.14) (-1.55) (2.59) (-4.35) (5.75)<-.000387>
PSI/DB ;PHI/DA -.000891 (.00215) (.0644) (.0699) (.102) (-.738) (2.02) (2.59) (-4.45) (5.75)[.965;.436]<-.1808-7>
PSI/DC ;THE/DB -.0846 (.0437) (.0699) (.177) (.886) (.541) (.588) (2.59)[-.305;.234]X[.709;3.30]<-.1058-4>

PSI/DC ;PHI/DA .276 (.0273) (.0644) (.256) (.478) (.824) (2.52) (5.75)[-.146;.130]X[.996;.559]<.3738-5>
ID/DB ;PHI/DA .581 (0) (.0644) (.0699) (.378) (2.59) (5.75)[.840;.0545]X[.0869;1.95]X[.643;2.30]<.0008880>
ID/DB ;PSI/DP -1.01 (.0699) (.0794) (.148) (.378) (2.59) (4.01)[-.241;.182]X[.0486;1.95]X[.709;3.31]<-.004497>

YD/DA ;THE/DB -.119 (0) (.0644) (.0699) (.189) (2.59) (5.75)[.832;.0421]X[.632;2.38]X[.0234;4.25]<-.0005359>
YD/DA ;PSI/DP -.698 (.0644) (.0794) (.262) (.388) (.803) (2.52) (4.01) (5.75)[-.163;.125]X[-.0125;4.23]<-.004739>
ID/DC ;PHI/DA -6.00 (0) (.0644) (.227) (.796) (2.53) (5.75)[-.656;.0195]X[.718;.0857]X[.629;2.28]<-.1468-4>

ID/DC ;THE/DB 1.95 (0) (.0333) (.0699) (.0730) (.158) (2.59)[-.292;.213]X[.632;2.31]X[.736;3.24]<.0003331>
ID/DC ;PSI/DP 10.9 (.0794) (.795) (2.39) (4.01)[.196;.126]X[-.601;.201]X[.996;.210]X[.734;3.42]<.06207>
ID/DC ;PHI/DA -.0452 (0) (.0644) (.321) (.606) (4.54) (5.75)[.990;.0485]X[.805;2.01]X[-.619;2.30]<-.0007842>

ID/DC ;THE/DB -.0102 (0) (.0699) (.0890) (.136) (2.59) (7.46)[-.258;.181]X[.618;2.38]X[.745;3.17]<-.0003119>
ID/DC ;PSI/DP .169 (.0794) (.177) (.119) (.695) (1.97) (4.01)[-.219;.209]X[-.688;2.07]X[.753;3.40]<.007842>
YD/DP ;PHI/DA .448 (.0644) (.0794) (.128) (.249) (-.271) (.356) (.909) (2.53) (4.01) (5.75)[-.176;.121]<-.5382-5>

YD/DP ;THE/DB -.186 (.0369) (-.0648) (.0699) (.0794) (.193) (.341) (2.59) (4.01)[.271;.861]X[.557;3.12]<.4528-5>
ID/DB ;PHI/DA .7918 (0) (.0688) (.0699) (-1.50) (2.59) (5.75)[.841;.0549]X[.335;1.38]X[.434;2.28]<-.0002749>
ID/DB ;PSI/DP -.161 (.0699) (.0794) (.206) (-1.53) (2.59) (4.01)[-.206;.254]X[.369;1.44]X[.753;3.21]<.001911>

PHI/DA ;THE/DB ;PSI/DP .0566 (-.00102) (.0209) (.0644) (.0699) (.0794) (.391) (2.59) (4.01) (5.75)<-.900E-7>
PHI/DC ;THE/DB ;PSI/DP .00265 (.0213) (.0617) (.0699) (.0794) (.170) (1.90) (2.59) (3.10) (4.01)<.2049-4>
THE/DC ;PHI/DA ;PSI/DP -.0117 (.00838) (.0294) (.0644) (.0794) (.417) (.435) (1.81) (4.01) (5.75)<-.113E-6>

TABLE IV-5 CONTINUED
AH-1G TRANSFER FUNCTION FACTORS

CASE 59 HOVER SCAS ON

CONTROL NUMERATORS CONCLUDED:

```
 PSI/DC ;PHI/DA ;THE/DP  -.0482 (-.0811) (.7278) (.0644) (.0699) (.0794) (.541) (.588) (2.59) (5.75)<.126E-7>

  ID/DP ;PHI/DA ;PSI/DP  -.491 (.0781) (.0644) (.0699) (.0794) (.474) (2.59) (4.01) (5.75)[ .0869;1.95 ]<-.000118>
  YD/DA ;THE/DB ;PSI/DP   .182 (-.00134) (.0644) (.0699) (.0794) (.541) (2.59) (4.01) (5.75)[ -.0129;4.23 ]<-.1722-4>
  ID/DC ;PHI/DA ;THE/DB   .473 (0) (.0224) (.0644) (.0699) (2.59) (5.75)[ .980;.0425 ][ .629;2.28 ]<.1357-4>

  ID/DC ;THE/DB ;PSI/DP  -1.52 (.0879) (.0699) (.0794) (.541) (2.59) (4.01)[ -.389;.283 ][ .748;3.31 ]<-.0982-3>
  ID/DC ;PHI/DA ;PSI/DP   .97 (.0767) (.0644) (.0794) (.223) (.794) (2.52) (4.01) (5.75)[ .882;.0424 ]<.3222-5>
  YD/DC ;PHI/DA ;THE/DB  -.00512 (0) (.0644) (.0699) (2.59) (5.75) (8.66)[ .767;.0561 ][ .630;2.34 ]<-.393E-4>

  ID/DC ;PHI/DA ;PSI/DP   .3754 (.0751) (.0644) (.0794) (.323) (.648) (2.01) (4.01) (5.75)[ -.719;2.06 ]<.0003772>
  ID/DC ;THE/DB ;PSI/DP   .30769 (.0699) (.0794) (.541) (2.59) (4.01) (5.75)[ -.268;.959 ][ .767;3.31 ]<.0001955>
  YD/DP ;PHI/DA ;THE/DB  -.0537 (0) (.0644) (.0699) (.0794) (.323) (-.259) (.368) (2.59) (4.01) (5.75)<.137E-4>

  ID/DB ;PHI/DA ;PSI/DP  -.0759 (.0225) (.0644) (.0699) (.0794) (-1.52) (2.59) (4.01) (5.75)[ .985;1.38 ]<.9645-4>

  ID/DC ;PHI/DA ;THE/DP ;PSI/DP  -.722 (.00845) (.0243) (.0644) (.0699) (.0794) (2.59) (4.01) (5.75)<-.381E-5>
  ID/DC ;PHI/DA ;THE/DB ;PSI/DP   .00351 (.0194) (.0644) (.0699) (.0794) (2.59) (4.01) (5.75) (8.41)<.122E-4>
```

GUST NUMERATORS:

```
 PHI/DG  -.00461 (0) (0) (0) (.217) (.369) (.459) (.784) (.997) (2.44)[ .845;.0538 ][ .639;2.27 ]<-.890E-5>
 THE/DG  -.000511 (0) (0) (.0775) (.212) (.421) (.431) (1.25)[ -.153;.303 ][ .988;1.59 ][ .589;2.15 ]<-.102E-4>
 PSI/DG   .00110 (0) (0) (.217) (.286) (.575) (.639) (-.654) (.769) (2.36)[ .844;.411 ][ .972;4.68 ]<-.000101>

 PHI/DC   .00901 (0) (0) (.0779) (.365) (.795) (.988) (2.47)[ -.151;.209 ][ .987;.329 ][ .629;2.02 ]<.102E-4>
 THE/DC  -.000904 (0) (0) (0) (-.0256) (.0264) (.0774) (.417) (.436) (.667)[ .625;2.22 ][ .656;3.99 ]<.457E-6>
 PSI/DC  -.0157 (0) (0) (.0699) (.257) (.498) (.548) (.582) (.798) (2.38)[ -.230;.146 ][ .784;3.56 ]<-.185E-4>

 PHI/DC   .00569 (0) (0) (-.243) (.369) (.986)[ .987;.0563 ][ .891;.273 ][ .937;1.16 ][ .623;2.44 ]<-.948E-6>
 THE/DC   .00342 (0) (0) (.0644) (.0853) (.167) (.421) (.432)[ -.276;.233 ][ .660;2.38 ][ .769;3.2e ]<.126E-5>
 PSI/DC   .00498 (0) (-.146) (.270) (.519) (2.27)[ .675;.200 ][ -.180;.391 ][ .992;.687 ][ .651;3.26 ]<-.698E-5>

 PHI/DC   .761 (0) (.281) (.373) (.393) (.757) (1.00) (3.27)[ .800;.0556 ][ -.132;.187 ][ .649;2.35 ]<.660E-6>
 THE/DC  -.222 (0) (.0671) (-.0704) (-.116) (.387) (.419) (.417)[ .5851;.188 ][ .612;2.29 ][ .636;3.11 ]<-.147E-6>
 PSI/DC   .392 (.391) (.882) (2.58)[ -.189;.196 ][ .997;.277 ][ -.194;.491 ][ .958;.547 ][ .655;2.82 ]<.000593>

 PHI/QC   1.05 (0) (-.100) (.115) (.219) (.371) (.386) (.879) (1.00) (1.96)[ .948;.0857 ][ .643;2.31 ]<-.704E-5>
 THE/QC   .237 (0) (.0145) (.0784) (.212) (.360) (.418) (.434)[ -.249;.271 ][ .639;2.32 ][ .836;3.16 ]<.175E-6>
 PSI/QC   .122 (-.0897) (.102) (.220) (.503) (2.14)[ .998;.347 ][ .953;.628 ][ .719;1.48 ][ -.615;1.85 ]<-.936E-6>

 PHI/RC   .0220 (0) (.228) (.367) (.953) (.765) (1.83) (9.82)[ -.512;.0921 ][ .660;.136 ][ .871;3.76 ]<.768E-5>
 THE/RC  -.0183 (0) (.0136) (.0654) (.220) (.415) (.438) (-2.72)[ -.134;.305 ][ .681;1.11 ][ .751;1.16 ]<.178E-5>
 PSI/RC   .540 (.213) (.251) (.407) (.550) (.574) (.608) (2.43)[ -.00397;.175 ][ -.370;.244 ][ .723;3.36 ]<.000148>

  ID/DG   .0148 (0) (.0773) (.212) (.327) (.667) (3.29)[ -.0940;.302 ][ .172;.776 ][ .596;2.39 ][ .871;2.67 ]<.000129>
  ID/UG   .117 (0) (0) (.00688) (.0635) (.203) (.220) (.797) (2.43)[ -.219;.271 ][ .657;2.33 ][ .715;1.33 ]<.172E-6>
  YD/DG   .0573 (0) (.0779) (.305) (.747) (.804) (2.52)[ -.174;.213 ][ .811;.649 ][ .529;1.89 ][ .526;3.22 ]<.000329>

  ID/UG   .0104 (0) (0) (.0820) (.176) (.319) (.598) (-1.06) (8.62)[ -.210;.226 ][ .667;2.36 ][ .759;1.91 ]<-.000904>
  ID/UG   .372 (0) (.0789) (.212) (.225) (.782) (2.44)[ .206;.196 ][ -.510;.229 ][ .651;2.33 ][ .718;1.36 ]<.000329>

 PHI/UG ;THE/DB   .00121 (0) (0) (.0699) (.363) (.454) (.997) (2.59)[ .881;.0541 ][ .641;2.25 ]<.556E-6>
 PHI/UG ;PSI/DP   .00679 (0) (0) (.0206) (.0794) (.217) (.370) (.454) (.794) (1.00) (2.44) (8.01)<.113E-5>
 THE/UG ;PHI/DA  -.000265 (0) (3) (.0644) (.421) (.431) (1.13) (5.75)[ .836;.0555 ][ .574;2.26 ]<-.281E-6>

 THE/UG ;PSI/DP   .000198 (0) (.0794) (.212) (.417) (.434) (8.01) (8.10)[ -.161;.285 ][ .963;1.58 ]<.586E-5>
 PSI/UG ;PHI/DA   .000792 (0) (0) (0) (.0644) (.118) (.228) (.522) (.619) (.768) (2.59) (5.75)<.698E-5>
 PSI/UG ;THE/DB  -.000168 (0) (.0699) (.204) (.541) (.588) (-.667) (2.59)[ .450;.421 ][ .986;4.86 ]<.627E-5>

 PHI/UG ;THE/DB  -.00118 (0) (0) (.0162) (.0699) (.0879) (.122) (.305) (.981) (2.59)[ .852;1.95 ]<-.154E-6>
 PHI/UG ;PSI/DP  -.00411 (0) (.0794) (.376) (.749) (1.00) (1.04) (8.01)[ -.160;.214 ][ .965;.124 ]<-.586E-5>
 THE/UG ;PHI/DA  -.000462 (0) (0) (-.0849) (.0644) (.0751) (.417) (.434) (.660) (5.75)[ .816;2.72 ]<.954E-7>

 THE/UG ;PSI/DP   .000995 (0) (0) (-.0213) (.0206) (.0794) (.417) (.435) (.667) (8.01)[ .629;1.24 ]<-.281E-6>
 PSI/UG ;PHI/DA  -.00766 (0) (.0644) (.259) (.418) (.586) (.583) (.794) (2.52) (5.75)[ -.186;.127 ]<-.1192-5>
 PSI/UG ;THE/DB   .00229 (0) (0) (0) (.0161) (.0699) (.0781) (.541) (.589) (2.59)[ .765;3.38 ]<.215E-6>
```

TABLE IV-5 CONTINUED
AH-1G TRANSFER FUNCTION FACTORS

CASE 59 HOVER SCAS ON

GUST NUMERATORS CONTINUED:

```
PRI/BG ;TRP/DB  -.0[illegible] (0) (0) (.[illegible]) (.[illegible]) (.[illegible]) (.[illegible]) (2.59) [ .[illegible] ; .[illegible] ][illegible] .[illegible] ; 2.[illegible] ]<-.[illegible]>
PRI/BG ;PSI/DP  -.00557 (0) (.02[illegible] (.0794) (-.[illegible]) (.[illegible]) ([illegible]) (.[illegible]) [ .[illegible] ; .[illegible] ][illegible] .[illegible] ; [illegible] ]<-.[illegible]>
TRI/BG ;PRI/DA   .03959 (0) (0) (.0[illegible]) (.0[illegible]) (.[illegible]) (.[illegible]) (5.75) [ .[illegible] ; .[illegible] ][illegible] .[illegible] ; 2.[illegible] ]<-.[illegible]>

TRP/BG ;PSI/DP  -.00[illegible] (0) (.[illegible]) (.0794) (.[illegible]) (.[illegible]) (.[illegible]) (6.01) [ -.[illegible] ; .[illegible] ][illegible] .[illegible] ; [illegible] ]<-.[illegible]>
PSI/BG ;PRI/DA   .0[illegible] (0) (.[illegible]) (.0[illegible]) (.[illegible]) (.[illegible]) (.[illegible]) (5.75) [ -.[illegible] ; .[illegible] ][illegible] .[illegible] ; [illegible] ]<-.[illegible]>
PSI/BG ;TRI/DB  -.0[illegible] (0) (.[illegible]) (.[illegible]) (.[illegible]) (.[illegible]) (.[illegible]) (2.59) [ -.[illegible] ; .[illegible] ][illegible] .[illegible] ; [illegible] ]<-.[illegible]>

PRI/PG ;TRI/DP  -.127 (0) (-.[illegible]) (.[illegible]) (.[illegible]) (.[illegible]) (1.[illegible]) (2.59) [ .[illegible] ; .[illegible] ][illegible] .[illegible] ; 2.[illegible] ]<-.[illegible]>
PRI/PG ;PSI/DP  -.[illegible] (.[illegible]) (.[illegible]) (.[illegible]) (.[illegible]) (.[illegible]) (.[illegible]) (1.[illegible]) (6.01) [ -.[illegible] ; .[illegible] ]<-.[illegible]>
TRI/PG ;PRI/DA  -.108 (0) (0) (.[illegible]) (.[illegible]) (.[illegible]) (.[illegible]) (5.75) [ .[illegible] ; .[illegible] ][illegible] .[illegible] ; 2.[illegible] ]<-.[illegible]>

TRI/PG ;PSI/DP   .174 (-.[illegible]) (.[illegible]) (-.[illegible]) (.[illegible]) (.[illegible]) (.[illegible]) (6.01) [ .[illegible] ; .[illegible] ][illegible] .[illegible] ; 2.[illegible] ]<-.[illegible]>
PSI/PG ;PRI/DA   .[illegible] (.[illegible]) (.[illegible]) (.[illegible]) (.[illegible]) (.[illegible]) (5.75) [ -.[illegible] ; .[illegible] ][illegible] .[illegible] ; [illegible] ]<-.[illegible]>
PSI/PG ;TRI/DB  -.[illegible] (0) (.[illegible]) (.[illegible]) (.[illegible]) (.[illegible]) (2.59) [ -.[illegible] ; .[illegible] ][illegible] .[illegible] ; 2.[illegible] ]<-.[illegible]>

PRI/QG ;TRI/DB  -.139 (0) (.0[illegible]) (.[illegible]) (.[illegible]) (.[illegible]) (2.59) [ .[illegible] ; .[illegible] ][illegible] .[illegible] ; 2.[illegible] ]<-.[illegible]>
PRI/QG ;PSI/DP  -.[illegible] (.[illegible]) (.[illegible]) (-.[illegible]) (.[illegible]) (.[illegible]) (.[illegible]) (.[illegible]) (1.[illegible]) (6.01) <-.[illegible]>
TRI/QG ;PSI/DA   .127 (0) (.[illegible]) (.[illegible]) (.[illegible]) (.[illegible]) (.[illegible]) (5.75) [ .[illegible] ; .[illegible] ][illegible] .[illegible] ; 2.[illegible] ]<-.[illegible]>

TRI/QG ;PSI/DP  -.[illegible] (.[illegible]) (.[illegible]) (.[illegible]) (.[illegible]) (.[illegible]) (.[illegible]) (6.01) [ -.[illegible] ; .[illegible] ][illegible] .[illegible] ; 1.[illegible] ]<-.[illegible]>
PSI/QG ;PRI/DA   .[illegible] (-.[illegible]) (.[illegible]) (.[illegible]) (.[illegible]) (.[illegible]) (2.59) (5.75) [ -.[illegible] ; .[illegible] ][illegible] .[illegible] ; [illegible] ]<-.[illegible]>
PSI/QG ;TRI/DB  -.[illegible] (.[illegible]) (.[illegible]) (.[illegible]) (.[illegible]) (2.59) [ .[illegible] ; .[illegible] ][illegible] .[illegible] ; 1.[illegible] ]<-.[illegible]>

PRI/RG ;TRP/DB  -.[illegible] (0) (.[illegible]) (.[illegible]) (.[illegible]) (.[illegible]) (1.[illegible]) (2.59) [ .[illegible] ; .[illegible] ][illegible] .[illegible] ; 1.[illegible] ]<-.[illegible]>
PRI/RG ;PSI/DP  -.121 (.[illegible]) (.[illegible]) (.[illegible]) (.[illegible]) (.[illegible]) (.[illegible]) (6.01) [ -.[illegible] ; .[illegible] ]<-.[illegible]>
TRI/RG ;PRI/DA  -.[illegible] (0) (.[illegible]) (.[illegible]) (.[illegible]) (.[illegible]) (-1.[illegible]) (5.75) [ -.[illegible] ; .[illegible] ][illegible] .[illegible] ; 1.[illegible] ]<-.[illegible]>

TRI/RG ;PSI/DP   .[illegible] (.[illegible]) (.[illegible]) (.[illegible]) (.[illegible]) (.[illegible]) (-6.[illegible]) [ -.[illegible] ; .[illegible] ][illegible] .[illegible] ; 1.[illegible] ]<-.[illegible]>
PSI/RG ;PRI/DA   .253 (.[illegible]) (.[illegible]) (.[illegible]) (.[illegible]) (.[illegible]) (.[illegible]) (2.[illegible]) (5.75) [ -.[illegible] ; .[illegible] ]<-.[illegible]>
PSI/RG ;TRI/DB  -.[illegible] (.[illegible]) (.[illegible]) (.[illegible]) (.[illegible]) (.[illegible]) (.[illegible]) (2.59) [ -.[illegible] ; .[illegible] ][illegible] .[illegible] ; 1.[illegible] ]<-.[illegible]>

YD/QG ;PRI/DA   .[illegible] (0) (.[illegible]) (.[illegible]) (.[illegible]) (1.[illegible]) (5.75) [ .[illegible] ; .[illegible] ][illegible] .[illegible] ; 2.[illegible] ]<-.[illegible]>
YD/QG ;TRI/DB  -.[illegible] (0) (.[illegible]) (.[illegible]) (2.59) [ .[illegible] ; .[illegible] ][illegible] .[illegible] ; 2.[illegible] ]<-.[illegible]>
YD/QG ;PSI/DP  -.[illegible] (.[illegible]) (.[illegible]) (.[illegible]) (.[illegible]) (3.[illegible]) (6.01) [ -.[illegible] ; .[illegible] ][illegible] .[illegible] ; 2.[illegible] ]<-.[illegible]>

YD/QG ;PRI/DA   .0[illegible] (0) (0) (.[illegible]) (.[illegible]) (.[illegible]) (.[illegible]) (5.75) [ .[illegible] ; .[illegible] ][illegible] .[illegible] ; 2.[illegible] ]<-.[illegible]>
YD/QG ;TRI/DB  -.[illegible] (0) (0) (.[illegible]) (.[illegible]) (.[illegible]) (.[illegible]) (2.59) [ -.[illegible] ; .[illegible] ][illegible] .[illegible] ; 2.[illegible] ]<-.[illegible]>
YD/QG ;PSI/DP  -.[illegible] (0) (.[illegible]) (.[illegible]) (.[illegible]) (.[illegible]) (-1.[illegible]) (6.01) (6.[illegible]) [ -.[illegible] ; .[illegible] ][illegible] .[illegible] ; 1.[illegible] ]<-.[illegible]>

YD/QG ;PRI/DA   .[illegible] (0) (.[illegible]) (.[illegible]) (.[illegible]) (.[illegible]) (2.52) (5.75) [ -.[illegible] ; .[illegible] ][illegible] .[illegible] ; 1.[illegible] ]<-.[illegible]>
YD/QG ;TRI/DB  -.[illegible] (0) (.[illegible]) (.[illegible]) (.[illegible]) (.[illegible]) (2.59) [ .[illegible] ; .[illegible] ][illegible] .[illegible] ; 1.[illegible] ]<-.[illegible]>
YD/QG ;PSI/DP  -.[illegible] (.[illegible]) (.[illegible]) (.[illegible]) (.[illegible]) (.[illegible]) (6.01) [ -.[illegible] ; .[illegible] ][illegible] .[illegible] ; 2.[illegible] ]<-.[illegible]>

YD/QG ;PRI/DA   .[illegible] (0) (0) (.[illegible]) (.[illegible]) (.[illegible]) (-.[illegible]) (5.75) [ .[illegible] ; .[illegible] ][illegible] .[illegible] ; 2.[illegible] ]<-.[illegible]>
YD/QG ;TRI/DB  -.[illegible] (0) (0) (.[illegible]) (.[illegible]) (.[illegible]) (.[illegible]) (2.59) [ -.[illegible] ; .[illegible] ][illegible] .[illegible] ; 2.[illegible] ]<-.[illegible]>
YD/QG ;PSI/DP  -.[illegible] (0) (.[illegible]) (.[illegible]) (.[illegible]) (.[illegible]) (-1.[illegible]) (6.01) (6.[illegible]) [ -.[illegible] ; .[illegible] ][illegible] .[illegible] ; 1.[illegible] ]<-.[illegible]>

YD/QG ;PRI/DA   .[illegible] (0) (.[illegible]) (.[illegible]) (.[illegible]) (.[illegible]) (2.59) (5.75) [ .[illegible] ; .[illegible] ][illegible] .[illegible] ; 2.[illegible] ]<-.[illegible]>
YD/QG ;TRI/DB  -.[illegible] (0) (.[illegible]) (.[illegible]) (.[illegible]) (.[illegible]) (2.59) [ -.[illegible] ; .[illegible] ][illegible] .[illegible] ; 2.[illegible] ]<-.[illegible]>
YD/QG ;PSI/DP  -.[illegible] (.[illegible]) (.[illegible]) (.[illegible]) (.[illegible]) (.[illegible]) (6.01) [ -.[illegible] ; .[illegible] ][illegible] .[illegible] ; 1.[illegible] ]<-.[illegible]>

YD/QG ; ZD/DC   -.[illegible] (0) (.[illegible]) (.[illegible]) (.[illegible]) (3.[illegible]) [ .[illegible] ; .[illegible] ][illegible] .[illegible] ; 2.[illegible] ][illegible] .[illegible] ; 2.[illegible] ]<-.[illegible]>
YD/VG ; ZD/DC   -.[illegible] (0) (.[illegible]) (.[illegible]) (.[illegible]) (2.[illegible]) [ .[illegible] ; .[illegible] ][illegible] .[illegible] ; 2.[illegible] ][illegible] .[illegible] ; 2.[illegible] ]<-.[illegible]>

PRI/QG ;TRP/DB ;PSI/DP  -.[illegible] (0) (.[illegible]) (.[illegible]) (.[illegible]) (.[illegible]) (.[illegible]) (1.[illegible]) (2.59) (6.01) <-.[illegible]>
TRI/QG ;PRI/DA ;PSI/DP   .[illegible] (0) (.[illegible]) (.[illegible]) (.[illegible]) (.[illegible]) (.[illegible]) (6.[illegible]) (5.75) <-.[illegible]>
PSI/QG ;PRI/DA ;TRI/DB  -.[illegible] (0) (.[illegible]) (.[illegible]) (.[illegible]) (.[illegible]) (.[illegible]) (2.59) (5.75) <-.[illegible]>

PRI/VG ;TRP/DB ;PSI/DP   .[illegible] (0) (.[illegible]) (.[illegible]) (.[illegible]) (.[illegible]) (.[illegible]) (1.[illegible]) (2.59) (6.01) <-.[illegible]>
TRP/VG ;PRI/DA ;PSI/DP   .[illegible] (0) (-.[illegible]) (.[illegible]) (.[illegible]) (.[illegible]) (.[illegible]) (6.[illegible]) (6.[illegible]) <-.[illegible]>
PSI/VG ;PRI/DA ;TRI/DB   .[illegible] (0) (0) (.[illegible]) (.[illegible]) (.[illegible]) (.[illegible]) (2.59) (5.75) <-.[illegible]>

PRI/VG ;TRP/DB ;PSI/DP   .[illegible] (0) (.[illegible]) (.[illegible]) (.[illegible]) (.[illegible]) (.[illegible]) (1.[illegible]) (2.59) (6.01) <-.[illegible]>
TRI/VG ;PRI/DA ;PSI/DP  -.[illegible] (0) (.[illegible]) (.[illegible]) (.[illegible]) (.[illegible]) (.[illegible]) (6.[illegible]) (6.[illegible]) <-.[illegible]>
PSI/VG ;PRI/DA ;TRP/DB  -.[illegible] (0) (-.[illegible]) (.[illegible]) (.[illegible]) (.[illegible]) (.[illegible]) (2.59) (5.75) <-.[illegible]>
```

TABLE IV-5 CONTINUED

AH-1G TRANSFER FUNCTION FACTORS

CASE 59 HOVER SCAS ON

GUST NUMERATORS CONCLUDED:

```
PHI/UG ;THE/DB ;PSI/DP    .114 (-.00259) (.0270) (.0699) (.0794) (.370) (.391) (1.03) (2.59) (4.01)<-.512E-7>
THE/UG ;PHI/DA ;PSI/DP    .0047 (0) (.0142) (.0644) (.0794) (.[illegible]) (.417) (.475) (4.01) (5.75)<.111E-6>
PSI/UG ;PHI/DA ;THE/DB   -.0294 (0) (.0311) (.0644) (.0699) (.442) (.569) (.599) (2.59) (5.75)<-.616E-5>

PSI/VG ;THE/DB ;PSI/DP    .115 (.0148) (.0214) (.0699) (.0794) (.372) (.387) (1.00) (2.59) (4.01)<.301E-6>
THE/VG ;PHI/DA ;PSI/DP   -.0047 (.0644) (.0794) (.149) (.417) (.475) (4.03) (5.75)[.973;.0144]<-.164E-6>
PSI/VG ;PHI/DA ;THE/DB   -.00327 (0) (.0644) (.0699) (-.3720) (.3609) (.569) (.599) (2.59) (5.75)<.171E-5>

PHI/WG ;THE/DB ;PSI/DP    .0306 (.0149) (.0232) (.0699) (.0794) (.372) (.454) (1.30) (2.59) (4.01)<.606E-7>
THE/WG ;PHI/DA ;PSI/DP    .00229 (0) (.0644) (.0794) (.417) (.475) (4.01) (5.75)[.419;.0702]<.376E-7>
PSI/WG ;PHI/DA ;THE/DB   -.0369 (-.00107) (.0163) (.0644) (.0699) (.407) (.561) (.588) (2.59) (5.75)<.565E-8>

ID/UG ;PHI/DA ;THE/DB   -.000744 (0) (-.0621) (.0644) (.0699) (2.59) (5.75)[.847;.0517][.662;2.29]<.202E-7>
ID/UG ;PHI/DA ;PSI/DP   -.00554 (.0217) (.0644) (.0794) (.325) (.464) (2.76) (4.01) (5.75)[.120;.711]<-.319E-5>
ID/UG ;THE/DB ;PSI/DP    .00124 (.0699) (.0794) (2.79) (4.31)[.959;.150][-.373;.166][.752;3.34]<.260E-5>

ID/UG ;PHI/DA ;THE/DB   -.00793 (0) (0) (.0644) (.0699) (2.59) (5.75)[.901;.0569][.660;2.30]<-.651E-5>
ID/UG ;PHI/DA ;PSI/DP   -.0051 (0) (.00329) (.0219) (.0644) (.0794) (.224) (.790) (2.51) (4.01) (5.75)<-.167E-6>
ID/UG ;THE/DB ;PSI/DP    .0118 (0) (.0699) (.0794) (.197) (2.59) (4.01)[-.230;.207][.749;3.30]<.000122>

YD/VG ;PHI/DA ;THE/DB   -.00266 (0) (-.00123) (.0369) (.0644) (.0699) (.350) (2.59) (5.75)[.590;1.72]<.117E-7>
YD/VG ;PHI/DA ;PSI/DP   -.00603 (.0644) (.0794) (.270) (.353) (.904) (2.51) (4.01) (5.75)[-.100;.125]<-.318E-5>
YD/VG ;THE/DB ;PSI/DP    .00399 (.0182) (.0699) (.0794) (.354) (2.59) (4.01)[.705;.406][.672;3.30]<.260E-5>

ID/WG ;PHI/DA ;THE/DB   -.00269 (0) (0) (.0644) (.0699) (2.59) (5.75)[.826;.0530][.662;2.29]<-.275E-5>
ID/WG ;PHI/DA ;PSI/DP   -.0422 (0) (.0253) (.0644) (.0794) (.319) (.595) (-.979) (4.01) (5.75)<.236E-6>
ID/WG ;THE/DB ;PSI/DP    .00468 (0) (.0699) (.0794) (.143) (2.59) (4.01)[-.270;.157][.740;3.31]<.104E-6>

ID/WG ;PHI/DA ;THE/DB   -.0248 (0) (0) (.0644) (.0699) (2.59) (5.75)[.902;.0566][.667;2.30]<-.316E-6>
ID/WG ;PHI/DA ;PSI/DP   -.165 (.0216) (.0644) (.0794) (.265) (.790) (2.58) (4.01) (5.75)[-.0718;.132]<-.319E-5>
ID/WG ;THE/DB ;PSI/DP    .0448 (.0173) (.0699) (.0794) (.1[illegible]) (2.59) (4.01)[-.309;.101][.748;3.31]<.260E-5>

ID/UG ; ID/DC ;PHI/DA   -.0029 (0) (.0644) (.990) (1.62) (5.75)[-.950;.0333][.929;.221][.572;2.45]<-.146E-6>
ID/UG ; ID/DC ;THE/DB    .0206 (0) (.0659) (.0699) (.216) (2.59)[-.201;.132][.677;2.30][.742;3.27]<.000331>
ID/UG ; ID/DC ;PSI/DP    .133 (.0794) (.263) (.913) (4.01) (4.02)[.753;.266][-.161;.352][.767;2.66]<.00207>

YD/VG ; ID/DC ;PHI/DA   -.221 (0) (-.0562) (.0644) (.225) (.798) (2.53) (5.75)[.707;.0817][.589;1.82]<.466E-6>
YD/VG ; ID/DC ;THE/DB    .0940 (0) (.0133) (.0699) (.0717) (2.59)[.759;.469][.554;1.98][.510;3.17]<.000111>
YD/VG ; ID/DC ;PSI/DP    .367 (.0794) (.242) (.806) (2.70) (4.01)[.0812;.132][.772;.637][.666;3.28]<.00207>

ID/UG ;PHI/DA ;THE/DB ;PSI/DP    .000612 (.0190) (-.0623) (.0644) (.0699) (.0794) (2.59) (4.01) (5.75)<-.100E-7>
ID/UG ;PHI/DA ;THE/DB ;PSI/DP    .00655 (0) (.0215) (.0644) (.0699) (.0794) (2.59) (4.01) (5.75)<.100E-5>
YD/VG ;PHI/DA ;THE/DB ;PSI/DP    .00130 (-.00101) (.0644) (.0699) (.0794) (.358) (2.59) (4.01) (5.75)<-.100E-7>

ID/WG ;PHI/DA ;THE/DB ;PSI/DP    .00221 (0) (.0196) (.0644) (.0699) (.0794) (2.59) (4.01) (5.75)<.923E-6>
ID/WG ;PHI/DA ;THE/DB ;PSI/DP    .0213 (-.00105) (.0211) (.0644) (.0699) (.0794) (2.59) (4.01) (5.75)<-.100E-7>
ID/UG ; ID/DC ;PHI/DA ;THE/DB    .0101 (0) (.0644) (.0699) (2.59) (5.75)[.739;.0576][.625;2.26]<.115E-6>

YD/VG ; ID/DC ;PHI/DA ;THE/DB    .0321 (0) (.00718) (.0546) (.0644) (.0699) (2.59) (5.75)[.590;1.82]<.290E-5>
YD/VG ; ID/DC ;PHI/DA ;PSI/DP    .116 (.0644) (.0794) (.224) (.790) (2.51) (4.01) (5.75)[.261;.0229]<.322E-5>
ID/WG ; ID/DC ;PHI/DA ;THE/DB    .0361 (0) (.0644) (.0699) (2.59) (5.75)[.752;.0562][.625;2.27]<.393E-6>

ID/UG ; ID/DC ;PHI/DA ;THE/DB ;PSI/DP   -.00821 (.0195) (.0644) (.0699) (.0794) (2.59) (4.01) (5.75)<-.361E-5>
YD/VG ; ID/DC ;PHI/DA ;THE/DB ;PSI/DP   -.0168 (.00351) (.0644) (.0699) (.0794) (2.59) (4.01) (5.75)<-.361E-5>
ID/WG ; ID/DC ;PHI/DA ;THE/DB ;PSI/DP   -.0295 (.0193) (.0644) (.0699) (.0794) (2.59) (4.01) (5.75)<-.122E-6>
```

MICROFILMED FROM
BEST AVAILABLE COPY

TABLE IV-5 CONTINUED
AH-1G TRANSFER FUNCTION FACTORS

CASE 61 20KT SCAS OFF

DENOMINATOR: (0) (.204) (1.04)[-.258;.326][.838;.655][.137;.698]<.00470>

CONTROL NUMERATORS:

PHI/DA .501 (0)[-.383;.311][.929;.540][.836;.696]<.00695>
THE/DA -.158 (0) (.00828) (.199) (.516) (1.17)[.165;.701]<-.7738-4>
PSI/DP -.731 (1.99)[.0242;.265][-.390;.330][.822;.678]<-.00775>

PHI/DB .137 (0) (.748)[.104;.248][.325;.669]<.00274>
PHI/DP .291 (0) (-.184) (.740)[-.181;.275][.771;.665]<-.00277>
PHI/DC .0291 (0)[-.306;.331][.884;.703][.157;1.74]<.00481>

THE/DA .100 (0) (.00527) (.214) (.550)[.205;.839]<.4008-4>
THE/DP .0562 (0) (.0125) (.189) (.537)[.576;.866]<.5358-4>
THE/DC .0314 (0) (.0183) (.215) (.907) (1.99)[-.0493;.491]<.000113>

PSI/DA .0341 (.603) (-1.30) (-4.89)[-.281;.307][.890;.725]<.006883>
PSI/DB .00975 (-.862) (1.12) (-4.39)[.0132;.128][.732;.875]<.002480>
PSI/DC .479 (1.02)[-.258;.297][-.157;.497][.872;.667]<.00470>

YB/DB 1.29 (0) (.202) (.891) (1.17)[.166;.701][.0172;2.01]<.296>
YB/DA .863 [-.381;.317][.928;.537][.806;.688][.0192;8.31]<.217>
ZB/DC -12.2 (0) (.0113) (.296) (1.07)[.234;.436][.155;.666]<-.00364>

YB/DC -.101 (0) (.209) (.895) (2.05)[-.0415;.696][-.0916;3.20]<-.193>
YB/DP 1.36 (-.817) (.728)[-.181;.279][.768;.666][.0651;2.49]<-.0929>
ZB/DB .881 (0) (.191) (-.455) (1.18)[.147;.696][.0622;1.80]<-.140>

PHI/DA ;THE/DB -.0791 (0) (.00759) (.538)[.455;.664]<-.000140>
PHI/DA ;PSI/DP -.377 (.0348)[-.330;.268][.870;.538]<-.000274>
THE/DB ;PSI/DP .116 (.00544) (.509) (1.19)[.0167;.216]<.1782-4>

PHI/DB ;PSI/DP -.0879 (.0340) (.753)[-.0571;.292]<-.000192>
PHI/DP ;THE/DB -.0459 (0) (.00486) (-.175) (.496) (.733) <.1828-4>
PHI/DC ;THE/DB -.00482 (0) (.0110) (.714)[.433;1.95]<-.000145>

THE/DA ;PSI/DP -.0754 (.00920) (.550)[.00418;.510]<-.9908-4>
THE/DP ;PHI/DA .000274 (0) (.00928) (.586)[-.336;8.70]<.000105>
THE/DC ;PHI/DA .0168 (0) (.248) (1.61)[.120;.134]<.000122>

PSI/DA ;THE/DB -.00536 (.00752) (.545) (1.01) (-1.18) (-4.88) <-.000128>
PSI/DB ;PHI/DA .00469 (.0130) (.335) (-4.89)[-.0647;.911]<-.000210>
PSI/DC ;THE/DB -.0758 (.0109) (.651) (1.16)[-.202;.466]<-.000135>

PSI/DC ;PHI/DA .238 (.0400)[-.343;.320][.901;.609]<.000362>
YB/DB ;PHI/DA .441 (0) (.517)[.454;.664][.0177;2.01]<.589>
YB/DB ;PSI/DP -.938 (.486) (1.19)[.0153;.216][.0181;2.01]<-.103>

YB/DA ;THE/DB -.136 (.00753) (.511)[.413;.651][.0197;8.11]<-.004112>
YB/DA ;PSI/DP -.679 [-.330;.269][.867;.539][-.0149;8.21]<-.255>
ZB/DC ;PHI/DA -6.09 (0) (.534)[-.411;.281][.340;.711]<-.130>

ZB/DC ;THE/DB 1.89 (0) (.0185) (.191) (1.17)[.120;.679]<.003411>
YB/DC ;PSI/DP 8.94 (-.114) (1.17)[-.158;.379][.521;.484]<-.0401>
YB/DC ;PHI/DA -.0515 (0) (1.56)[.790;.159][-.122;1.20]<-.0209>

YB/DC ;THE/DB -.0268 (0) (.119) (1.19) (1.76)[.0918;.711]<-.003946>
YB/DC ;PSI/DP .0993 (.793) (1.25)[-.0208;.365][-.0198;2.73]<.252>
YB/DP ;PHI/DA .431 (.990) (-1.07)[-.339;.265][.837;.538]<-.009249>

YB/DP ;THE/DB -.215 (.00553) (-.234) (.494) (.718)[.0656;2.47]<.0006027>
ZB/DB ;PHI/DA .442 (0) (-.443)[.470;.677][.0846;1.76]<-.277>
ZB/DB ;PSI/DP -.646 (-.456) (1.20)[.00995;.228][.0465;1.91]<.06027>

PHI/DA ;THE/DB ;PSI/DP .0595 (.00806) (.0342) (.529) <.8638-5>
PHI/DC ;THE/DB ;PSI/DP .0256 (.0146) (.0322) (.717) <.8638-5>
THE/DC ;PHI/DA ;PSI/DP -.0128 (.0162) (.0819) (1.19) <-.1038-4>

TABLE IV-5 CONTINUED
AH-1G TRANSFER FUNCTION FACTORS

CASE 61 20KT SCAS OFF

CONTROL NUMERATORS CONCLUDED:

PSI/DC ;PHI/DA ;THE/DB -.0378 (.00385) (.0392) (.630) <-.359E-5>

YD/DR ;PHI/DA ;PSI/DP -.482 (.0342) (.508) [.0184;2.01] <-.0348>
YD/DA ;THE/DR ;PSI/DP .107 (.00807) (.528) [-.0136;4.23] <.000[illegible]>
ZD/DC ;PHI/DA ;THE/DB .947 (0) (.0210) [.438;.612] <.00747>

ZD/DC ;THE/DP ;PSI/DP -1.39 (.0194) (1.20) [-.0551;.270] <-.00235>
YD/DC ;PHI/DA ;PSI/DP 8.60 (.0558) (-.0578) [.395;.358] <-.00189>
YD/DC ;PHI/DA ;THE/DB -.0134 (0) (1.79) [.363;.642] <-.00990>

YD/DC ;PHI/DA ;PSI/DP .0584 (.0398) (1.06) [-.184;2.91] <.0195>
YD/DC ;THE/DB ;PSI/DP .0152 (1.23) (2.34) [-.0631;.254] <.00282>
YD/DP ;PHI/DA ;THE/DB -.0680 (.00806) (.523) (.955) (-1.97) <.0002[illegible]>

ZD/DB ;PHI/DA ;PSI/DP -.332 (.0343) (-.415) [.0813;1.78] <.0150>

ZD/DC ;PHI/DA ;THE/DB ;PSI/DP -.715 (.0199) (.0358) <-.000502>
YD/DC ;PSI/DA ;THE/DB ;PSI/DP .00779 (.0349) (2.43) <.000659>

GUST NUMERATORS:

PHI/DG -.00380 (0) (0) (0) (-.222) (.888) [.[illegible]2;.559] <.000234>
THE/DG -.000398 (0) (0) (.203) (.890) (3.60) [.287;.754] <-.000146>
PSI/DG -.00630 (0) (0) (1.08) [-.477;.269] [.756;.682] <.000229>

PHI/VG .00672 (0) (0) (.529) [-.248;.315] [.882;.685] <.000146>
THE/VG -.00156 (0) (0) (0) (-.00306) (.275) [.868;.592] <.860E-6>
PSI/VG -.0118 (0) (0) (1.13) [-.261;.121] [.826;.651] <-.000580>

PHI/WG .00180 (0) (0) (.196) [-.861;.336] [.130;.825] <.549E-4>
THE/WG .00188 (0) (0) (.0276) (.207) (1.44) [.112;.701] <.767E-5>
PSI/WG .00407 (0) [-.276;.258] [-.0589;.652] [.985;.713] <.583E-4>

PHI/PG .977 (0) [-.276;.315] [.897;.630] [.815;.728] <.0201>
THE/PG -.203 (0) (-.00123) (.241) (-.263) (.500) [.356;.786] <-.152E-4>
PSI/PG .429 (.836) [-.248;.320] [.854;.680] [-.585;1.04] <.0185>

PHI/QG .842 (0) (.311) (.549) [-.625;.286] [.849;.695] <.00568>
THE/QG .225 (0) (.0104) (.206) (.532) (1.89) [.165;.765] <.000285>
PSI/QG -.191 (.304) (-.725) (2.57) [-.331;.275] [.867;.811] <.00539>

PHI/RG -.0257 (0) (1.66) (-2.47) [-.250;.313] [.875;.691] <.00493>
THE/RG -.00618 (-.0111) (.275) (.759) [-1.00;.00112] [.250;2.07] <.786E->
PSI/RG .559 (1.82) [-.213;.331] [-.219;.417] [.840;.659] <.00470>

YD/DG .0212 (0) (.204) (.846) (1.56) [.105;.735] [-.225;1.23] <.00470>
ZD/DG .235 (0) (0) (.193) (1.08) [.499;.838] [.117;.723] <.00493>
YD/YG .0607 (0) (.537) [-.249;.315] [.842;.682] [.188;1.87] <.00470>

YD/WG .00585 (0) (0) (.206) (-3.15) [.115;.703] [.997;2.17] <-.00885>
ZD/WG .508 (0) (.202) (-.270;.362] [.140;.699] [.977;.846] <.00470>

PHI/DG ;THE/DB .000601 (0) (0) (.886) [.381;.900] <.853E-4>
PHI/DG ;PSI/DP .000951 (0) (0) (.0282) (-.0728) (1.20) <-.215E-5>
THE/DG ;PHI/DA -.000208 (0) (0) (.910) [.559;1.07] <-.000216>

THE/DG ;PSI/DP .000295 (0) (1.16) (2.31) [-.0397;.328] <.855E-4>
PSI/DG ;PHI/DA .00139 (0) (0) (.0196) [.802;.368] <.172E-4>
PSI/DG ;THE/DB -.000692 (0) (-.261) (1.19) [.719;.490] <.747E-4>

PHI/VG ;THE/DB -.00105 (0) (0) (.00826) [.979;.525] <-.240E-5>
PHI/VG ;PSI/DP -.00149 (0) [-.167;.295] [.835;.813] <-.856E-4>
THE/VG ;PHI/DA -.000763 (0) (0) (.00531) (.454) (.743) <-.137E-5>

THE/VG ;PSI/DP .00113 (0) (0) (.0102) [.988;.739] <.633E-5>
PSI/VG ;PHI/DA -.00614 (0) [-.119;.324] [.915;.557] <-.000200>
PSI/VG ;THE/DB .00188 (0) (0) (.00755) (.538) (1.22) <.928E-5>

TABLE OF CONTENTS

Section		Page	
I	INTRODUCTION	1	1/A14
	A. Background Information	2	1/B2
	B. Stability and Control Derivatives	4	1/B3
	C. Transfer Function Factors	11	1/B12
II	HUGHES OH-6A	19	1/C7
III	BOEING VERTOL BO-105C	67	1/F14
IV	BELL AH-1G	115	2/C8
V	BELL UH-1H	213	3/C10
VI	SIKORSKY CH-53D	303	4/C4
REFERENCES		358	4/G4
Appendix			
A	PROCEDURE FOR FORMULATING EQUATIONS OF MOTION	359	4/G5
B	ANALYSIS OF MULTILOOP SYSTEM RELATIONSHIPS	371	5/A7

TABLE IV-5 CONTINUED
AH-1G TRANSFER FUNCTION FACTORS

CASE 61 20KT SCAS OFF

GUST NUMERATORS CONTINUED:

```
PHI/WG ;THE/DB  -.000296 (0) (0) (.0196)[ .360;.963]<-.538E-5>
PHI/WG ;PSI/DP  -.00250  (0) (.0829) (-.317)[ .251;.183]<.219E-5>
THE/WG ;PHI/DA   .000949 (0) (0) (.0356)[ .542;.566]<.108E-4>

THE/WG ;PSI/DP  -.00138  (0) (.0241) (1.60)[ -.0456;.312]<-.516E-5>
PSI/WG ;PHI/DA   .00138  (0) (.0482) (.648)[ -.32 ;.822]<.109E-4>
PSI/WG ;THE/DB  -.000661 (0) (.0192) (1.12)[ -.259;.585]<-.488E-5>

PHI/PG ;THE/DB  -.153  (0) (.00752) (.535)[ .427;.721]<-.000320>
PHI/PG ;PSI/DP  -.840  (.0338)[ -.275;.280 ][ .858;.610]<-.000825>
THE/PG ;PHI/DA  -.0990 (0) (.00740) (.534)[ .402;.732]<-.000210>

THE/PG ;PSI/DP   .189  (.0102) (.576) (-.604)[ .465;.618]<-.000202>
PSI/PG ;PHI/DA   .192  (.0199) (.201) (-.331)[ .618;.600]<-.865E-4>
PSI/PG ;THE/DB  -.0658 (.00755) (.541) (1.06)[ -.493;1.02]<-.000296>

PHI/QG ;THE/DB  -.134  (0) (.00951) (.533)[ .484;.618]<-.000260>
PHI/QG ;PSI/DP  -.561  (.0404)[ -.505;.212 ][ .965;.384]<-.000150>
THE/QG ;PHI/DA   .115  (0) (.0121) (.533)[ .422;.703]<.000368>

THE/QG ;PSI/DP  -.166  (.0109) (.531) (1.92)[ -.0591;.352 ]<-.000228>
PSI/QG ;PHI/DA  -.128  (.0270) (.262) (-.464)[ .519;.675]<.000186>
PSI/QG ;THE/DB   .0279 (.00949) (.550) (-.643) (.915) (2.73)<-.000234>

PHI/RG ;THE/DB   .00410 (0) (.00823) (.550) (1.93) (-2.25)<-.809E-4>
PHI/RG ;PSI/DP  -.144  (.0377)[ -.324;.268 ][ .892;.554]<-.000119>
THE/RG ;PHI/DA  -.00327 (0) (.00536) (.520)[ -.0634;2.25 ]<-.461E-4>

THE/RG ;PSI/DP   .00526 (.0123) (.620) (-5.06)[ .0591;.514]<-.535E-4>
PSI/RG ;PHI/DA   .281  (.0313)[ -.336;.267 ][ .867;.547]<.000198>
PSI/RG ;THE/DB  -.0882 (.00823) (.540) (1.16)[ -.155;.412]<-.771E-4>

 YD/UG ;PHI/DA   .0107 (0) (.722)[ .600;.882 ][ -.267;1.07]<.00695>
 YD/UG ;THE/DB  -.00285 (0) (1.17)[ .927;.227 ][ .159;.683]<-.771E-4>
 YD/UG ;PSI/DP  -.0152 [-.0386;.331 ][ -.160;1.10 ][ .992;1.17]<-.00275>

 ZD/UG ;PHI/DA   .118  (0) (0)[ .252;.367 ][ .519;.677 ]<.00729>
 ZD/UG ;THE/DB  -.0368 (0) (0) (.193) (1.17)[ .180;.728]<-.00442>
 ZD/UG ;PSI/DP  -.172  (0) (1.08)[ -.192;.388 ][ .650;.363]<-.00289>

 YD/VG ;PHI/DA   .0246 (0) (.485)[ -.311;.266 ][ .860;.493]<.000188>
 YD/VG ;THE/DB  -.00956 (0) (.00826)[ .978;.532 ][ .185;1.86]<-.771E-4>
 YD/VG ;PSI/DP  -.0284 [-.171;.299 ][ .868;.837 ][ .190;1.24]<-.00275>

 XD/WG ;PHI/DA   .00288 (0) (0) (-2.96) (1.45)[ .581;.585]<-.0101>
 XD/WG ;THE/DB  -.00334 (0) (0) (.177) (1.16)[ .155;.702]<-.000119>
 XD/WG ;PSI/DP  -.00408 (0) (-1.47)[ -.0469;.310 ][ .944;2.25]<.00690>

 ZD/WG ;PHI/DA   .255  (0) (.521)[ -.376;.337 ][ .849;.679 ]<.00695>
 ZD/WG ;THE/DB  -.0819 (0) (.00843) (.197) (1.17)[ .171;.698 ]<-.771E-4>
 ZD/WG ;PSI/DP  -.372 [ .0571;.276 ][ -.414;.358 ][ .978;.869]<-.00275>

 XD/UG ; ZD/DC  -.235  (0) (.0275) (1.32)[ .865;.697 ][ -.385;.939]<-.00366>
 YD/VG ; ZD/DC  -.717  (0) (.0151) (.559)[ .374;.405 ][ .151;1.92]<-.00366>

PHI/UG ;THE/DB ;PSI/DP  -.000153 (0) (.0340) (1.14)<-.597E-5>
THE/UG ;PHI/DA ;PSI/DP   .000155 (0) (.0389) (1.58)<.851E-5>
PSI/UG ;PHI/DA ;THE/DB  -.000517 (0) (.0330) (.383)<-.654E-5>

PHI/VG ;THE/DB ;PSI/DP   .000224 (0) (.00585) (.854)<.555E-6>
THE/VG ;PHI/DA ;PSI/DP   .000578 (0) (.00919) (.579)<.308E-5>
PSI/VG ;PHI/DA ;THE/DB   .000976 (0) (.00752) (.583)<.398E-5>

PHI/WG ;THE/DB ;PSI/DP   .000409 (0)[ .959;.0291]<.385E-6>
THE/WG ;PHI/DA ;PSI/DP  -.000715 (0) (.0182) (.0455)<-.592E-6>
PSI/WG ;PHI/DA ;THE/DB  -.000321 (0) (-.00663) (.0509)<.108E-6>
```

TABLE IV-5 CONTINUED
AH-1G TRANSFER FUNCTION FACTORS

CASE 61 20KT SCAS OFF

GUST NUMERATORS CONCLUDED:

```
PHI/PG ;THE/DB ;PSI/DP   .131 (.00824) (.0339) (.511)<.194E-4>
THE/PG ;PHI/DA ;PSI/DP   .0744 (.00757) (.0325) (.524)<.956E-5>
PSI/PG ;PHI/DA ;THE/DB  -.0277 (.00737) (.0421) (.536)<-.461E-5>

PHI/QG ;THE/DB ;PSI/DP   .0902 (.0102) (.0347) (.526)<.169E-4>
THE/QG ;PHI/DA ;PSI/DP  -.0868 (.0116) (.0328) (.528)<-.173E-4>
PSI/QG ;PHI/DA ;THE/DB   .0185 (.0155) (.0477) (.539)<.741E-5>

PHI/RG ;THE/DB ;PSI/DP   .0226 (.0101) (.0353) (.561)<.450E-5>
THE/RG ;PHI/DA ;PSI/DP   .00230 (-.0745)[.689;.0770]<-.102E-5>
PSI/RG ;PHI/DA ;THE/DB  -.0443 (.00676) (.0319) (.542)<-.517E-5>

 XD/UG ;PHI/DA ;THE/DB  -.00183 (0) (.236)[.446;.643]<-.000140>
 XD/UG ;PHI/DA ;PSI/DP   .000787 (0) (.0348) (.951)[-.146;1.03]<.274E-4>
 XD/UG ;THE/DB ;PSI/DP   .00203 (.168) (1.19)[.150;.209]<.178E-4>

 ZD/UG ;PHI/DA ;THE/DB  -.0184 (0) (0)[.479;.689]<-.00876>
 ZD/UG ;PHI/DA ;PSI/DP  -.0886 (0) (.0346)[.373;.306]<-.000287>
 ZD/UG ;THE/DB ;PSI/DP   .0269 (0) (1.19)[-.0387;.243]<.00189>

 YD/VG ;PHI/DA ;THE/DB  -.00388 (0) (.00675) (.415) (.876)<-.517E-5>
 YD/VG ;PHI/DA ;PSI/DP  -.0132 [-.340;.264][.843;.504]<-.000274>
 YD/VG ;THE/DB ;PSI/DP   .00445 (.00583) (.440)[.425;1.29]<.178E-4>

 XD/WG ;PHI/DA ;THE/DB  -.00167 (0) (0)[.447;.654]<-.000715>
 XD/WG ;PHI/DA ;PSI/DP  -.00204 (0) (.0416) (-3.05) (3.69)<.000958>
 XD/WG ;THE/DB ;PSI/DP   .00241 (0) (1.18)[-.0267;.227]<.000147>

 ZD/WG ;PHI/DA ;THE/DB  -.0410 (0) (.00764)[.467;.668]<-.000140>
 ZD/WG ;PHI/DA ;PSI/DP  -.191 (.0345) (.451)[-.328;.303]<-.000274>
 ZD/WG ;THE/DB ;PSI/DP   .0600 (.00559) (1.19)[-.00844;.212]<.178E-4>

 XD/UG ; ZD/DC ;PHI/DA  -.119 (0)[-.603;.860][.686;1.22]<-.130>
 XD/UG ; ZD/DC ;THE/DB   .0404 (0) (.154) (1.17)[.0879;.684]<.00341>
 XD/UG ; ZD/DC ;PSI/DP   .163 (-.857)[-.00581;.405][.766;1.32]<-.0401>

 YD/VG ; ZD/DC ;PHI/DA  -.287 (0) (-.118) (.549)[.196;.410]<.00314>
 YD/VG ; ZD/DC ;THE/DB   .112 (0) (.0187) (.451)[.185;1.90]<.00341>
 YD/VG ; ZD/DC ;PSI/DP   .363 (-.116)[.578;.676][.210;1.44]<-.0401>

 XD/UG ;PHI/DA ;THE/DB ;PSI/DP   .00104 (.0341) (.244)<.868E-5>
 ZD/UG ;PHI/DA ;THE/DB ;PSI/DP   .0138 (0) (.0343)<.000475>
 YD/VG ;PHI/DA ;THE/DB ;PSI/DP   .00208 (.00806) (.518)<.868E-5>

 XD/WG ;PHI/DA ;THE/DB ;PSI/DP   .00124 (0) (.0349)<.431E-4>
 ZD/WG ;PHI/DA ;THE/DB ;PSI/DP   .0309 (.00821) (.0343)<.868E-5>
 XD/UG ; ZD/DC ;PHI/DA ;THE/DB   .0203 (0)[.379;.607]<.00747>

 YD/VG ; ZD/DC ;PHI/DA ;THE/DB   .0449 (0) (.0173) (.333)<.000258>
 YD/VG ; ZD/DC ;PHI/DA ;PSI/DP   .163 (-.0758)[.399;.392]<-.00189>
 YD/WG ; ZD/DC ;PHI/DA ;THE/DB   .0270 (0)[.369;.606]<.00990>

 XD/UG ; ZD/DC ;PHI/DA ;THE/DB ;PSI/DP  -.0184 (.0350)<-.000502>
 YD/VG ; ZD/DC ;PHI/DA ;THE/DB ;PSI/DP  -.0251 (.0200)<-.000502>
 XD/WG ; ZD/DC ;PHI/DA ;THE/DB ;PSI/DP  -.0189 (.0349)<-.000659>
```

MICROFILMED FROM
BEST AVAILABLE COPY

TABLE IV-5 CONTINUED
AH-1G TRANSFER FUNCTION FACTORS

CASE 61 20KT SCAS ON

DENOMINATOR: (0) (.251) (.522) (.830) (2.66)[.911; .109 ± -.317; .155 ± .305; .174 ± .621; 2.29 ± .786; 3.39]< .001150>

CONTROL NUMERATORS:

PHI/DA .501 (0) (.0688) (.253) (.522) (.830) (2.72) (8.75)[-.198; .132 ± .590; .176 ± .616; 2.35]< .000151>
THE/DB -.158 (0) (.00736) (.0699) (.529) (2.59)[.805; .0996 ± .385; .365 ± .621; 2.39 ± .787; 3.111 <- .1989-5>
PSI/DP -.733 (.0798) (.156) (.250) (.522) (.830) (2.66) (8.01)[-.519; .186 ± .142; .187 ± .772; 3.50]< -.5879-6>

PHI/DB .180 (0) (.0699) (.170) (.779) (.937) (2.59)[.879; .181 ± .0848; .317 ± .615; 2.091 < .6119-6>
PHI/DP .291 (0) (.0798) (-.204) (.523) (.829) (2.65) (8.01)[-.0192; .160 ± .991; .252 ± .815; 3.28]< -.5818-6>
PHI/DC .0293 (0) (.237) (.361) (.783) (.925) (1.06) (2.59)[-.258; .131 ± .620; .223 ± .969; 5.88]< .000102>

THE/DA .102 (0) (.00701) (.0688) (.0759) (.559) (5.75)[.000; .0277 ± .0968; .588 ± .598; 2.21]< .2938-5>
THE/DP .0221 (0) (.0185) (.0798) (.337) (.520) (.6083) (2.77) (8.01)[.526; .0674 ± -.751; 3.81]< .1058-5>
THE/DC .0338 (0) (.0155) (.0729) (.183) (1.34)[-.166; .222 ± .000; .627 ± .892; 7.17 ± .688; 3.87]< .6718-6>

PSI/DA .0381 (.0688) (.257) (.527) (.588) (1.32) (1.35) (2.35) (8.89) (5.75)[-.0671; .136 ± .998; .686]< .000137>
PSI/DB .00975 (.0699) (-.202) (.170) (2.59) (8.47)[.526; .186 ± .999; .518 ± -.0635; .868 ± .837; 3.57]< .5139-6>
PSI/DC .878 (.181) (.256) (.526) (.857) (2.67)[-.0189; .118 ± -.265; .223 ± .997; .600 ± .750; 3.42]< .000100>

ID/DB 1.28 (0) (.0699) (.509) (2.59)[.799; .100 ± .188; .165 ± .0182; 2.02 ± .622; 2.30 ± .788; 3.33]< .00768>
YD/DA .863 (.0688) (.259) (.522) (.832) (2.72) (8.75)[-.202; .135 ± .532; .169 ± .602; 3.28 ± .0251; 8.25]< .013E8>
ID/DC -12.2 (0) (-.0650) (.0596) (.226) (.811) (2.66)[-.188; .183 ± .750; .195 ± .613; 2.26 ± .785; 3.39]< .00119>

ID/DC -.101 (0) (.0787) (.176) (.322) (.605) (1.52)[-.139; .225 ± .838; 2.32 ± -.593; 2.84 ± .686; 3.32]< -.00956>
YD/DP 1.36 (.0798) (.276) (-.310) (.395) (.526) (.803) (2.66) (8.01)[-.0537; .171 ± .621; .612 ± .881; 3.12]< -.00198>
ID/DB .881 (0) (.0699) (-.836) (2.59)[.819; .100 ± .189; .170 ± .0811; 1.77 ± .613; 2.31 ± .781; 3.38]< -.00178>

PHI/DA ;THE/DB -.0791 (0) (.00751) (.0688) (.0699) (.529) (2.59) (5.75)[.525; .170 ± .617; 2.25]< -.3048-5>
PHI/DA ;PSI/DP -.377 (.0188) (.0688) (.0798) (.253) (.522) (.831) (2.70) (8.01) (5.75)[-.0845; .111]< -.5488-5>
THE/DB ;PSI/DP .116 (.00588) (.0699) (.0798) (.124) (.529) (2.59) (8.01)[-.211; .116 ± .772; 3.46]< .3819-6>

PHI/DB ;PSI/DP -.0878 (.0188) (.0699) (.0798) (.330) (.753) (1.00) (2.59) (8.01)[-.0571; .292]< -.8108-5>
PHI/DP ;THE/DB -.0859 (0) (.00887) (.0699) (.0798) (-.138) (.206) (.527) (2.59) (8.01)[.908; 1.26]< .3038-6>
PHI/DC ;THE/DB -.00482 (0) (.0111) (.0699) (.363) (.718) (1.07) (2.54)[.573; .204 ± .929; 5.35]< -.3208-5>

THE/DA ;PSI/DP -.0758 (.00920) (.0688) (.0798) (.817) (.835) (.550) (2.01) (5.75)[.00818; .510]< -.2198-5>
THE/DP ;PHI/DA -.0178 (0) (.00930) (.0688) (.0798) (.331) (.519) (.598) (-1.12) (8.01) (5.75) < .2198-5>
THE/DC ;PHI/DA .0168 (0) (.0688) (.193) (1.39) (5.75)[.183; .0621 ± .000; .627 ± .791; 2.17]< .2758-5>

PSI/DA ;THE/DB -.00536 (.00752) (.0688) (.0699) (.581) (.596) (.598) (1.01) (-1.18) (2.59) (-8.89) (5.75) <-.2738-5>
PSI/DB ;PSI/DA .00869 (.0330) (.0688) (.0699) (.370) (2.59) (-8.82) (5.75)[.999; .513 ± -.0981; 1.00]< -.8889-6>
PSI/DC ;THE/DB -.0758 (.0109) (.0699) (.180) (.581) (.588) (.630) (2.59)[-.256; .216 ± .752; 3.37]< -.2888-5>

PSI/DC ;PHI/DA .238 (.3399) (.0683) (.257) (.529) (.858) (2.73) (5.75)[-.100; .139 ± .997; .600]< .7739-5>
ID/DB ;PHI/DA .681 (0) (.0688) (.0699) (.509) (2.59) (5.75)[.524; .170 ± .0188; 2.02 ± .616; 2.25]< .0130>
ID/DB ;PSI/DP -.938 (.0699) (.0798) (.123) (.508) (2.59) (8.01)[-.220; .115 ± .0182; 2.01 ± .772; 3.46]< -.00219>

YD/DA ;THE/DB -.136 (.00752) (.0688) (.0699) (.529) (2.59) (5.75)[.882; .168 ± .602; 2.28 ± .0252; 8.25]< -.923E-8>
YD/DA ;PSI/DP -.679 (.0688) (.0798) (.253) (.522) (.832) (2.69) (8.01) (5.75)[-.0880; .111 ± -.0182; 8.23]< -.00585>
ID/DC ;PHI/DA -6.09 (0) (.0688) (.222) (.810) (2.69) (5.75)[-.119; .110 ± .710; .201 ± .608; 2.22]< -.00268>

ID/DC ;THE/DB 1.99 (0) (.0196) (.0699) (2.59)[.925; .0968 ± .0946; .173 ± .615; 2.28 ± .789; 3.38]< .000108>
ID/DC ;PSI/DP 8.98 (-.0798) (.0798) (.215) (.811) (2.68) (8.01)[.877; .168 ± -.282; .146 ± .778; 3.88]< -.000956>
ID/DC ;PHI/DA -.0515 (0) (.0688) (.323) (.606) (1.45) (5.75)[.775; .0681 ± .787; 2.25 ± -.677; 2.77]< -.000865>

ID/DC ;THE/DB -.0268 (0) (.0699) (2.01) (2.59)[.917; .0895 ± .129; .171 ± .895; 2.17 ± .753; 3.35]< -.000122>
ID/DC ;PSI/DP .0981 (.0798) (.170) (.322) (.605) (1.38) (8.01)[-.188; .201 ± -.608; 2.46 ± .982; 3.83]< .00537>
YD/DP ;PHI/DA .811 (.0688) (.0798) (.256) (.520) (-1.07) (2.72) (8.01) (5.75)[-.0961; .113 ± .997; .887]< -.000197>

YD/DP ;THE/DB -.215 (.00751) (.0699) (.0798) (-.253) (.195) (.581) (2.59) (8.01)[.605; .571 ± .877; 3.33]< .1289-8>
ID/DA ;PHI/DA .882 (0) (.0688) (.0699) (-.827) (2.59) (5.75)[.516; .171 ± .0161; 1.77 ± .621; 2.26]< -.006121>
ID/DB ;PSI/DP -.546 (.0699) (.0798) (.112) (-.428) (2.59) (8.01)[-.206; .127 ± .0878; 1.78 ± .771; 3.46]< .00128>

PHI/DA ;THE/DB ;PSI/DP .0595 (.00986) (.0182) (.0688) (.0699) (.0798) (.529) (2.59) (8.01) (5.75) < .1859-6>
PHI/DC ;THE/DB ;PSI/DP .0256 (.0186) (.0322) (.0699) (.0798) (.170) (.717) (1.00) (2.59) (8.01) < .1882-6>
THE/DC ;PHI/DA ;PSI/DP -.0128 (.3162) (.0819) (.0688) (.0798) (.617) (.835) (1.19) (8.01) (5.75) < -.2198-6>

MICROFILMED FROM
BEST AVAILABLE COPY

TABLE IV-5 CONTINUED
AH-1G TRANSFER FUNCTION FACTORS

CASE 61   20KT   SCAS ON

CONTROL NUMERATORS CONCLUDED:

```
PSI/DC ;PHI/DA ;THE/DB  -.0378 (.00385) (.0347) (.0644) (.0699) (.541) (.588) (.630) (2.59) (5.75)<-.767E-7>

 XD/DB ;PHI/DA ;PSI/DP  -.482 (.0347) (.0644) (.0699) (.0794) (.508) (2.59) (4.01) (5.75)[.0384;2.01]<-.000726>
 YD/DA ;THE/DB ;PSI/DP   .107 (.00407) (.0644) (.0699) (.0794) (.529) (2.59) (4.01) (5.75)[-.0136;4.23]<.000178>
 ZD/DC ;PHI/DA ;THE/DB   .947 (0) (.0210) (.0644) (.0699) (2.59) (5.75)[.519;.158][.610;2.23]<.000166>

 XD/DC ;THE/DB ;PSI/DP  -1.39 (.0134) (.0699) (.0794) (.180) (2.59) (4.01)[-.239;.119][.771;1.46]<-.502E-4>
 ZD/DC ;PHI/DA ;PSI/DP   4.63 (-.0332) (.0644) (.0794) (.200) (.811) (2.65) (4.01) (5.75)[.075;.0723]<-.403E-4>
 XD/DC ;PHI/DA ;THE/DB  -.0134 (0) (.0644) (.0699) (2.34) (2.59) (5.75)[.534;.162][.484;2.11]<-.000220>

 XD/DC ;PHI/DA ;PSI/DP   .0544 (.0397) (.0644) (.0794) (.323) (.606) (1.30) (4.01) (5.75)[-.758;2.51]<.000415>
 YD/DC ;THE/DB ;PSI/DP   .0152 (.0699) (.0794) (.126) (2.40) (2.59) (4.01)[-.247;.132][.764;3.47]<.607E-4>
 YD/DP ;PHI/DA ;THE/DB  -.0688 (.00806) (.0644) (.0699) (.0794) (.523) (.955) (-1.07) (2.59) (4.01) (5.75)<.625E-5>

 XD/DB ;PHI/DA ;PSI/DP  -.332 (.0343) (.0644) (.0699) (.0794) (-.415) (2.59) (4.01) (5.75)[.0413;1.78]<.000320>

 ZD/DC ;PHI/DA ;THE/DB ;PSI/DP  -.715 (.0199) (.0354) (.0644) (.0699) (.0794) (2.59) (4.01) (5.75)<-.307E-3>
 XD/DC ;PHI/DA ;THE/DP ;PSI/DP   .00779 (.0349) (.0644) (.0699) (.0794) (2.41) (2.59) (4.01) (5.75)<.161E-4>
```

GUST NUMERATORS:

```
PHI/UG  -.00380 (0) (0) (0) (.213) (.373) (.837) (2.62)[.543;.134][.971;.985][.615;1.53]<-.206E-4>
THE/UG  -.000394 (0) (0) (.418) (.433) (1.40)[.322;.116][.191;.218][.413;2.22][.965;3.93]<-.465E-5>
PSI/UG   .00630 (0) (0) (-.143) (.224) (.383) (.529) (.613) (.799) (2.65)[.668;.174][.779;3.53]<-.199E-4>

PHI/VG   .00672 (0) (0) (.0893) (.283) (.422) (.922) (2.97)[-.103;.162][.999;.431][.666;1.62]<.465E-5>
THE/VG  -.00156 (0) (0) (0) (.03654) (.7236) (.0318) (.580)[.000;.424][.771;2.23][.573;3.40]<-.124E-6>
PSI/VG  -.0119 (0) (0) (.0444) (.256) (.526) (.554) (.590) (.803) (2.73)[-.0897;.140][.779;3.53]<-.124E-4>

PHI/WG  -.000180 (0) (0) (0) (.216) (.365) (.837) (1.07) (2.13)[-.368;.101][.668;.218][.576;2.99]<-.111E-6>
THE/WG   .00188 (0) (0) (.0256) (.103) (.173) (.425) (.427)[-.0137;.196][.654;2.36][.765;3.33]<.258E-6>
PSI/WG   .00407 (0) (.169) (.265) (.528) (.657) (.696) (2.85)[-.0187;.102][-.195;.289][.727;3.41]<.124E-5>

PHI/PG   .977 (0) (.263) (.369) (.527) (.829) (1.30) (2.88)[-.158;.141][.565;.181][.620;2.35]<.000436>
THE/PG  -.203 (0) (.00666) (.0514) (-.173) (.413) (.438) (.522)[.632;.239][.600;2.28][.637;3.38]<.395E-5>
PSI/PG   .429 (.522) (1.00) (2.13)[-.0438;.154][.992;.261][-.220;.423][.999;.556][.684;2.89]<.000395>

PHI/QG   .882 (0) (.213) (.372) (.523) (.938) (1.21) (2.89)[-.202;.106][.643;.171][.615;2.17]<.000122>
THE/QG   .226 (0) (.0104) (.415) (.416) (.525)[.995;.117][.0445;.232][.601;2.27][.838;3.52]<.104E-4>
PSI/QG  -.191 (.226) (-.342) (.521) (1.27) (1.91)[-.0507;.106][.878;.288][.998;.550][.928;4.23]<.000115>

PHI/RG  -.0257 (0) (.256) (.358) (.551) (.829) (1.07) (-9.78)[-.191;.149][.587;.235][.982;2.78]<.000106>
THE/RG  -.00638 (0) (.00983) (.0552) (-.263) (.330)[.999;.476][.734;.762][-.887;1.54][.913;3.99]<.112E-5>
PSI/RG   .559 (.187) (.249) (.525) (.563) (.572) (.839) (2.64)[.0465;.155][-.381;.190][.755;3.44]<.000100>

 XD/UG   .0212 (0) (.351) (.680) (2.32)[.925;.114][.193;.226][.257;.598][.596;2.42][.828;3.17]<.000150>
 ZD/UG   .235 (0) (0) (.0653) (.309) (.805) (2.64)[.739;.110][.0037;.177][.629;2.12][.748;3.36]<.000157>
 YD/VG   .0607 (0) (.0875) (.263) (.516) (.880) (2.74)[-.156;.167][.562;.286][.664;1.87][.577;3.36]<.000150>

 XD/WG   .00585 (0) (0) (.317) (.596) (-.966) (9.96)[.987;.112][.0199;.196][.626;2.38][.760;3.43]<-.000324>
 ZD/WG   .508 (0) (.242) (.779) (2.74)[.904;.137][-.310;.161][.366;.177][.623;2.30][.787;3.39]<.000150>

PHI/UG ;THE/DB   .000603 (0) (0) (.0699) (.371) (2.59)[.512;.165][.977;.972][.591;1.58]<.190E-5>
PHI/UG ;PSI/DP   .000953 (0) (0) (.0343) (.0794) (.215) (.370) (.866) (1.00) (1.05) (2.57) (4.01)<.193E-5>
THE/UG ;PHI/DA  -.000279 (0) (0) (.0644) (.418) (.433) (1.37) (5.75)[.567;.202][.442;2.05]<-.468E-5>

THE/UG ;PSI/DP   .000295 (0) (.0794) (.166) (.417) (.435) (1.61) (4.01)[-.233;.179][.853;3.58]<.193E-5>
PSI/UG ;PHI/DA   .00129 (0) (0) (.0339) (.0644) (.232) (.383) (.523) (.613) (.800) (2.68) (5.75)<.256E-5>
PSI/UG ;THE/DB  -.000992 (0) (.0699) (-.165) (.182) (.541) (.589) (2.59)[.636;.199][.779;3.50]<.159E-5>

PHI/VG ;THE/DB  -.00105 (0) (0) (.00788) (.0699) (.0929) (.918) (2.59)[.999;.411][.682;1.57]<-.585E-7>
PHI/VG ;PSI/DP  -.00149 (0) (.0794) (.293) (.370) (.452) (.819) (1.30) (1.34) (4.01)[-.119;.173]<-.193E-5>
THE/VG ;PHI/DA  -.000761 (0) (0) (.00707) (.0644) (.0921) (.579) (5.75)[.000;.429][.704;2.30]<-.917E-7>

THE/VG ;PSI/DP   .00111 (0) (0) (.0197) (.0295) (.0794) (.417) (.435) (.580) (4.01)[.743;1.41]<.135E-6>
PSI/VG ;PHI/DA  -.00614 (0) (.0644) (.256) (.526) (.553) (.591) (.802) (2.78) (5.75)[-.0715;.138]<-.627E-5>
PSI/VG ;THE/DB   .00138 (0) (0) (.00756) (.0364) (.0699) (.541) (.543) (.588) (2.59)[.780;1.48]<.198E-6>
```

TABLE IV-5 CONTINUED
AH-1G TRANSFER FUNCTION FACTORS

CASE 61 20KT SCAS ON

GUST NUMERATORS CONTINUED:

```
 PRI/WG :THR/DR  -.003796 (0) (0) (.0197) (.0699) (.365) (1.01) (2.59)[ .513;.191 W .639;2.88 ]<-.1198-6>
 PRI/WG :PSI/DP  -.00720  (0) (-.0673) (.0794) (.207) (.370) (.859) (1.00) (1.16) (2.59) (5.75)[ .843;.0753 ]<.8689-7>
 THR/WG :PRI/DA   .000949 (0) (0) (.0154) (.0699) (.435) (.438) (5.75)[ .513;.181 W .640;3.26 ]<.2189-6>

 THR/WG :PSI/DP  -.00119  (0) (.0340) (.0794) (.163) (.817) (.835) (8.01)[ -.218;.168 W .811;3.58 ]<-.1197-6>
 PSI/WG :PRI/DA   .00198  (0) (.0443) (.0699) (.367) (.529) (.654) (.697) (2.99) (5.75)[ -.0773;.1893 ]<.2339-6>
 PSI/WG :THR/DR  -.000661 (0) (.0197) (.0699) (.195) (.541) (.588) (2.59)[ -.250;.259 W .733;3.30 ]<-.1048-6>

 PRI/PG :THR/DR  -.151  (0) (.00758) (.0699) (.369) (.533) (1.01) (2.59)[ .520;.175 W .618;2.37 ]<-.7099-5>
 PRI/PG :PSI/DP  -.840  (.0338) (.0794) (.262) (.370) (.527) (.825) (1.00) (2.91) (8.01)[ -.0895;.129 ]<-.1769-8>
 THR/PG :PRI/DA  -.0990 (0) (.00760) (.0644) (.417) (.699) (.524) (5.75)[ .509;.188 W .597;2.76 ]<-.6578-5>

 THR/PG :PSI/DP   .189  (.0187) (.0794) (-.783) (.817) (.835) (.525) (8.01)[ .686;.193 W .685;3.22 ]<-.8318-5>
 PSI/PG :PRI/DA   .192  (.0196) (.0699) (-.121) (.113) (.731) (.522) (1.00) (2.32) (5.75)[ .999;.5561 ]<-.1859-5>
 PSI/PG :THR/DR  -.0658 (.00756) (.0699) (.250) (.536) (.541) (.588) (2.59)[ -.175;.883 W .636;2.90 ]<-.6329-5>

 PRI/QG :THR/DR  -.118  (0) (.00953) (.0699) (.372) (.524) (.994) (2.59)[ .532;.165 W .618;2.36 ]<-.5769-5>
 PRI/QG :PSI/DP  -.561  (.0198) (.0794) (.231) (.370) (.527) (.841) (1.00) (2.52) (8.01)[ -.0581;.0498 ]<-.1198-5>
 THR/QG :PRI/DA   .115  (0) (.0121) (.0699) (.414) (.417) (.724) (5.75)[ .512;.180 W .606;2.25 ]<.8048-5>

 THR/QG :PSI/DP  -.165  (.0199) (.0794) (.178) (.817) (.835) (.525) (8.01)[ -.217;.197 W .846;3.50 ]<-.8879-5>
 PSI/QG :PRI/DA  -.126  (.0269) (.0699) (-.146) (.592) (1.71) (1.96) (5.75)[ .979;.214 W .998;.551 ]<.1967-5>
 PSI/QG :THR/DR   .0279 (.00949) (.0699) (-.402) (.538) (.541) (.588) (2.59)[ .419;.293 W .955;4.20 ]<-.6998-5>

 PRI/RG :THR/DR   .00410 (0) (.00426) (.0699) (.357) (.661) (1.08) (2.59) (7.97) (-8.62)[ .527;.222 ]<-.1799-6>
 PRI/RG :PSI/DP  -.148  (.0176) (.0794) (.251) (.370) (.553) (.829) (1.00) (2.72) (8.01)[ -.0778;.1134 ]<-.2558-5>
 THR/RG :PRI/DA  -.00127 (0) (.00527) (.0644) (.388) (5.75)[ .998;.836 W .667;.712 W -.583;2.28 ]<-.9868-6>

 THR/RG :PSI/DP   .00526 (.0123) (.0794) (.274) (.817) (.835) (-2.29) (8.01)[ .189;.196 W .336;1.76 ]<-.1189-5>
 PSI/RG :PRI/DA   .281  (.0113) (.0644) (.253) (.525) (.563) (.572) (.839) (2.53) (5.75)[ -.0896;.1113 ]<.8015-5>
 PSI/RG :THR/DR  -.0882 (.00827) (.0699) (.167) (.541) (.542) (.588) (2.59)[ -.253;.198 W .756;3.00 ]<-.1658-5>

 ID/DG :PRI/DA   .0107  (0) (.0648) (.351) (.681) (2.14) (5.75)[ .575;.206 W .288;.587 W .618;2.31 ]<.0001151>
 ID/DG :THR/DR  -.00385 (0) (.0699) (.247) (2.59)[ .720;.101 W .211;.159 W .415;2.26 W .751;3.15 ]<-.1885-5>
 ID/DG :PSI/DP  -.0152  (.0798) (.167) (.351) (.680) (2.82) (8.01)[ -.288;.191 W .381;.589 W .787;3.88 ]<-.5879-8>

 ID/DG :PRI/DA   .118  (0) (0) (.0588) (.0634) (.209) (.806) (2.67) (5.75)[ .501;.170 W .622;2.27 ]<.0001158>
 ID/DG :THR/DR  -.0358 (0) (0) (.0699) (2.59)[ .817;.103 W .178;.173 W .610;2.32 W .785;3.13 ]<-.0001193>
 ID/DG :PSI/DP  -.172  (0) (.0798) (.212) (.806) (2.64) (8.01)[ .988;.101 W -.112;.182 W .772;1.89 ]<-.6168-8>

 YD/DG :PRI/DA   .0246 (0) (.0588) (.0698) (.256) (.612) (.980) (2.71) (5.75)[ -.0725;.109 W .618;1.86 ]<.6582-5>
 YD/DG :THR/DR  -.00956 (0) (.00784) (.0699) (.0907) (.522) (2.59)[ .891;.271 W .471;1.88 W .577;3.36 ]<-.1982-5>
 YD/DG :PSI/DP  -.1294 (.0798) (.243) (.516) (.881) (2.75) (8.01)[ -.237;.175 W .572;.262 W .698;3.19 ]<-.5879-8>

 ID/RG :PRI/DA   .0111  (0) (0) (.0648) (.318) (.597) (-.816) (5.75)[ .552;.189 W .621;2.26 ]<-.0002311>
 ID/RG :THR/DR  -.00119 (0) (0) (.0699) (2.59)[ .919;.0972 W .167;.166 W .619;2.28 W .787;3.11 ]<-.9188-5>
 ID/RG :PSI/DP  -.00408 (0) (.0799) (.162) (.317) (.596) (-.380) (8.01) (9.79)[ -.186;.167 W .797;3.72 ]<.0001187>

 ID/WG :PRI/DA   .255  (0) (.0648) (.244) (.778) (2.83) (5.75)[ -.151;.135 W .589;.174 W .618;2.25 ]<.0001151>
 YD/WG :THR/DR  -.0919 (0) (.00800) (.0699) (2.59)[ .807;.100 W .181;.161 W .625;2.31 W .788;3.11 ]<-.1888-5>
 ID/WG :PSI/DP  -.372  (.0798) (.155) (.247) (.778) (2.76) (8.01)[ -.512;.150 W .225;.150 W .771;1.51 ]<-.5878-8>

 ID/DG : ID/DC  -.235  (0) (.0592) (-.108) (.748) (2.61)[ .976;.259 W -.289;.111 W .565;2.58 W .856;3.10 ]<.0011>
 YD/WG : YD/DC  -.717  (0) (-.0579) (.0976) (.816) (2.73)[ .964;.180 W .892;.319 W .652;1.87 W .573;3.17 ]<.0011>

 PRI/DG :THR/DR :PSI/DP  -.000151 (0) (.0380) (.0699) (.0798) (.370) (1.00) (1.16) (2.59) (8.01)<-.1278-6>
 THR/DG :PRI/DA :PSI/DP   .000155 (0) (.0188) (.0648) (.0798) (.817) (.835) (1.58) (8.01) (5.75)<.1818-6>
 PSI/DG :PRI/DA :THR/DR  -.000517 (0) (.0119) (.0648) (.0699) (.383) (.541) (.588) (2.59) (5.75)<-.1808-6>

 PRI/YG :THR/DR :PSI/DP   .000224 (0) (.00585) (.0699) (.0798) (.370) (.859) (1.00) (2.59) (8.01)<.1188-7>
 THR/DG :PRI/DA :PSI/DP   .000178 (0) (.00919) (.0648) (.0798) (.817) (.835) (.970) (8.01) (5.75)<.6578-7>
 PSI/YG :PRI/DA :THR/DR   .000336 (0) (.00752) (.0648) (.0699) (.541) (.541) (.588) (2.59) (5.75)<.8508-7>

 PRI/WG :THR/DR :PSI/DP   .000809 (0) (.0699) (.0798) (.370) (1.00) (2.59) (8.01)[ .959;.0291 ]<.7118-8>
 THR/WG :PRI/DA :PSI/DP  -.000715 (0) (.0182) (.0855) (.0648) (.0798) (.817) (.835) (8.01) (5.75)<-.1268-7>
 PSI/WG :PRI/DA :THR/DR  -.000321 (0) (-.00447) (.0509) (.0648) (.0699) (.541) (.588) (2.59) (5.75)<.2318-8>
```

TABLE IV-5 CONTINUED
AH-1G TRANSFER FUNCTION FACTORS

CASE 61 20KT SCAS ON

GUST NUMERATORS CONCLUDED:

```
PHI/PG :THE/DP :PSI/DP    .111 (.00828) (.0339) (.0699) (.0798) (.170) (.531) (1.00) (2.59) (8.01) <.815E-6>
THE/PG :PHI/DP :PSI/DP   -.0788 (-.00757) (-.0325) (-.0688) (-.0798) (-.017) (-.835) (-.526) (-8.01) (-5.75)<-.203E-6>
PSI/PG :PHI/DP :THE/DP   -.0277 (-.00737) (-.0321) (-.0688) (-.0697) (-.536) (-.531) (-.588) (-2.59) (-5.75)<-.983E-7>

PHI/QG :THE/DP :PSI/DP    .0907 (.0102) (.0347) (.0699) (.0798) (.170) (.526) (1.00) (2.59) (8.01) <.360E-6>
THE/QG :PHI/DP :PSI/DP   -.0869 (-.0116) (-.0338) (-.0688) (-.0794) (-.017) (-.835) (-.526) (-8.01) (-5.75)<-.169E-6>
PSI/QG :PHI/DP :THE/DP    .0195 (.0155) (.0477) (.0688) (.0699) (.539) (.541) (.588) (2.59) (5.75)<.158E-6>

PHI/RG :THE/DP :PSI/DP    .0226 (.0171) (.0353) (.0699) (.0798) (.170) (.561) (1.00) (2.59) (8.01) <.961E-7>
THE/RG :PHI/DA :PSI/DP    .00710 (.00688) (-.0345) (-.0798) (-.017) (-.835) (-8.01) (-5.75)[-.699;-.0770]<-.217E-7>
PSI/RG :PHI/DA :THE/DB   -.0883 (-.00676) (-.0319) (-.0688) (-.0699) (-.581) (-.582) (-.588) (-2.59) (-5.75)<-.110E-6>

ED/BG :PHI/DA :THE/DB    -.00183 (0) (.0688) (.0699) (.287) (2.59) (5.75)[ .530;.165]U[.611;2.21]<-.309E-5>
ED/BG :PHI/DA :PSI/DP    -.00787 (.0338) (.0688) (.0798) (.351) (.641) (2.77) (8.01) (5.75)[ .332;.582]<-.588E-6>
ED/BG :THE/DB :PSI/DP     .00201 (.0699) (.0798) (.0948) (.789) (2.59) (8.01)[-.185;.106]U[.773;3.86]<.381E-6>

ED/QG :PHI/DA :THE/DB    -.0188 (0) (0) (.0688) (.0699) (2.59) (5.75)[ .531;.175]U[.623;2.26]<-.000193>
ED/QG :PHI/DA :PSI/DP    -.0836 (0) (.0688) (.0798) (.211) (.805) (2.68) (8.01) (5.75)[ .996;.0360]<-.613E-5>
ED/QG :THE/DB :PSI/DP     .0269 (0) (.0699) (.0798) (.133) (2.59) (8.01)[-.239;.128]U[.772;3.86]<.801E-8>

ED/RG :PHI/DA :THE/DB    -.00188 (0) (.00710) (.0688) (.0652) (.0699) (.518) (2.59) (5.75)[ .618;1.88]<-.226E-6>
ED/RG :PHI/DA :PSI/DP    -.0112 (.0688) (.0798) (.256) (.512) (.840) (2.67) (8.01) (5.75)[-.0965;.111]<-.583E-5>
ED/RG :THE/DB :PSI/DP     .00885 (.00588) (.0699) (.0798) (.522) (2.59) (8.01)[ .659;.211]U[.701;3.81]<.381E-6>

ED/BG :PHI/DA :THE/DB    -.00167 (0) (0) (.0688) (.0699) (2.59) (5.75)[ .528;.168]U[.613;2.23]<-.158E-8>
ED/BG :PHI/DA :PSI/DP    -.0280 (0) (.0838) (.0688) (.0798) (.318) (.597) (-.919) (8.01) (5.75)<.208E-8>
ED/BG :THE/DB :PSI/DP     .00281 (0) (.0699) (.0798) (.129) (2.59) (8.01)[-.235;.121]U[.772;3.86]<.318E-5>

ED/BG :PHI/DA :THE/DB    -.0810 (0) (.00765) (.0688) (.0699) (2.59) (5.75)[ .528;.170]U[.619;2.26]<-.309E-5>
ED/BG :PHI/DA :PSI/DP    -.191 (.0395) (.0688) (.0798) (.283) (.779) (2.62) (8.01) (5.75)[-.0307;.119]<-.583E-5>
ED/BG :THE/DB :PSI/DP     .0[illegible](.00550)(.0699)(.0798)(.125)(2.59)(8.01)[-.226;.114][.773;3.86]<.380E-5>

XD/UG : ED/DC :PHI/DA    -.119(0)(.0644)(.751)(2.44)(5.75)[.0741;.751][-.371;.304][.619;2.27]<-.265E-8>
XD/UG : ED/DC :THE/DB     .0403(0)(.0699)(2.59)[.0191;.0820][.108;.174][.799;2.20][.751;3.75]<.104E-3>
XD/UG : ED/DC :PSI/DP     .163(.0794)(-.267)(.745)(2.71)(4.01)[.03601;.209][.0644;.229][.743;3.66]<-.256E-3>

YD/VG : ED/DC :PHI/DA    -.288(0)(.0644)(-.0718)(.103)(.817)(2.71)(5.75)[.843;.129][.408;1.89]<.190E-3>
YD/VG : ED/DC :THE/DB     .112(0)(.0147)(.0699)(.0753)(2.59)[.0941;.209][.658;1.77][.572;3.17]<.104E-3>
YD/VG : ED/DC :PSI/DP     .363(-.0766)(.0794)(.817)(2.64)(4.01)[.956;.209][.614;.709][.671;3.60]<-.256E-3>

XD/UG :PHI/DA :THE/DB :PSI/DP     .0010(.0361)(.0644)(.0699)(.0794)(.344)(2.59)(4.01)(5.75)<.185E-6>
ZD/UG :PHI/DA :THE/DB :PSI/DP    -.0138(0)(.0343)(.0644)(.0699)(.0794)(2.59)(4.01)(5.75)< .101E-4>
YD/VG :PHI/DA :THE/DB :PSI/DP     .0021(.00804)(.0644)(.0699)(.0794)(.518)(2.59)(4.01)(5.75)< .185E-6>

XD/WG :PHI/DA :THE/DB :PSI/DP     .0012(0)(.0340)(.0644)(.0699)(.0794)(2.59)(4.01)(5.75)< .990E-6>
ZD/WG :PHI/DA :THE/DB :PSI/DP     .0309(.00821)(.0343)(.0644)(.0699)(.0794)(2.59)(4.01)(5.75)< .185E-5>
XD/WG : ED/DC :PHI/DA :THE/DB     .0422(0)(.0644)(.0699)(2.59)(5.75)[.511;.162][.895;2.16]<.166E-3>

YD/VG : ED/DC :PHI/DA :THE/DB     .0448(0)(.0183)(.0614)(.0644)(.0699)(2.59)(5.75)[.607;1.89]< .122E-4>
YD/VG : ED/DC :PHI/DA :PSI/DP     .103 (-.0400)(.0644)(.0794)(.144)(.171)(.817)(2.67)(4.01)(5.75)<-.03E-4>
XD/WG : ED/DC :PHI/DA :THE/DB     .0869(0)(.0644)(.0699)(2.59)(5.75)[.509;.162][.895;2.16]< .220E-5>

XD/WG : ED/DC :PHI/DA :THE/DB :PSI/DP    -.0144 (.0350)(.0644)(.0699)(.0794)(2.59)(4.01)(5.75)< -.107E-4>
YD/VG : ED/DC :PHI/DA :THE/DB :PSI/DP    -.0256 (.0200)(.0644)(.0699)(.0794)(2.59)(4.01)(5.75)< -.107E-4>
XD/WG : ED/DC :PHI/DA :THE/DB :PSI/DP    -.0189 (.0340)(.0644)(.0699)(.0794)(2.59)(4.01)(5.75)< -.141E-4>
```

TABLE IV-5 CONTINUED
AH-1G TRANSFER FUNCTION FACTORS

CASE 62 40 KT SCAS OFF

DENOMINATOR: (0) (.115) (1.34)[-.166;.322]X[.814;.717]X[.279;.967]<.00774>

CONTROL NUMERATORS:

PHI/DA .493 (0)[-.268;.349]X[.915;.676]X[.399;.981]<.0264>
THE/DB -.159 (0) (.00417) (.116) (.750) (1.34)[.283;.965]<-.715E-4>
PSI/DP -.785 (1.39)[.123;.103]X[-.191;.354]X[.798;.732]<-.000772>

PHI/DB .0317 (0) (-.130) (.136) (1.38) (3.60)[.308;.920]<-.00236>
THE/DA .0922 (0) (-.00197) (.131) (.755)[.298;1.03]<-.193E-4>

PHI/DA ;THE/DB -.0782 (0) (.00450) (.752)[.416;.970]<-.000249>
PHI/DA ;PSI/DP -.396 (.0536)[-.232;.330]X[.872;.668]<-.00103>
THE/DB ;PSI/DP .124 (.00398) (.740) (1.35)[.149;.143]<.101E-4>

PHI/DB ;PSI/DP -.0342 (.0557) (.0982) (-.132)[.897;1.75]<.757E-4>
PHI/DP ;THE/DB -.0507 (0) (.00394) (-.121) (.686) (.922)<.152E-4>
PHI/DC ;THE/DB -.0150 (0) (.00342) (.978)[.282;1.61]<-.000129>

THE/DA ;PSI/DP -.0728 (.00302) (.753)[.0262;.412]<-.281E-4>
THE/DP ;PHI/DA .00329 (0) (.00321) (.772)[-.170;2.77]<.627E-4>
THE/DC ;PHI/DA .0174 (0) (.0338) (1.85)[.500;.698]<.000529>

PSI/DA ;THE/DB -.00463 (.00454) (.756) (1.17) (-1.32) (-4.69)<-.000115>
PSI/DB ;PHI/DA .0135 (.0504) (.362) (-1.42)[-.221;1.10]<-.000428>
XD/DB ;PHI/DA .621 (0) (.713)[.416;.971]X[.0192;2.06]<1.77>

YD/DA ;THE/DB -.135 (.00454) (.752)[.365;.950]X[.0207;4.32]<-.00775>
ZD/DB ;PHI/DA .913 (0) (-.0837)[.424;.981]X[.0738;2.06]<-.312>
XD/DC ;PHI/DA -.0622 (0) (1.65)[.501;.735]X[-.146;3.05]<-.517>

YD/DP ;THE/DB -.231 (.00399) (-.271) (.641) (.964)[.109;2.22]<.000683>
ZD/DC ;PHI/DA -6.56 (0) (.390)[.0747;.395]X[.329;.950]<-.359>

PHI/DA ;THE/DB ;PSI/DP .0627 (0) (.0531) (.746)<.00248>
PHI/DC ;THE/DB ;PSI/DP .0306 (0) (.0525) (.978)<.00157>
THE/DC ;PHI/DA ;PSI/DP -.0152 (.0172) (.0572) (1.54)<-.230E-4>

PSI/DC ;PHI/DA ;THE/DB -.0287 (0) (.0593) (.989)<-.00168>
XD/DB ;PHI/DA ;PSI/DP -.498 (.0532) (.709)[.0195;2.06]<-.0796>
YD/DA ;THE/DB ;PSI/DP .112 (.00433) (.746)[-.0121;4.24]<.00653>

ZD/DC ;PHI/DA ;THE/DB 1.01 (0) (.0110)[.409;.932]<.00966>
ZD/DC ;PHI/DA ;PSI/DP 5.29 (.0512) (.163)[.129;.530]<.0124>
XD/DC ;PHI/DA ;THE/DB -.0120 (0) (2.48)[.384;1.01]<-.0307>

XD/DC ;PHI/DA ;PSI/DP .0644 (.0562) (1.34)[-.175;2.95]<.0424>
YD/DP ;PHI/DA ;THE/DB -.0709 (.00434) (.742) (1.73) (-1.84)<.000728>
ZD/DB ;PHI/DA ;PSI/DP -.732 (.0533) (-.0773)[.0697;2.08]<.0130>

ZD/DC ;PHI/DA ;THE/DB ;PSI/DP -.810 (.00960) (.0538)<-.000418>
XD/DC ;PHI/DA ;THE/DB ;PSI/DP .00884 (.0529) (2.83)<.00133>

TABLE IV-5 CONTINUED
AH-1G TRANSFER FUNCTION FACTORS

CASE 62 40KT SCAS ON

DENOMINATOR: (0) (.[illegible]) (.655) (.959) (2.73) [.521;.271][-.0381;.156][.557;.214][.620;2.44][.773;3.17] <.000171>

CONTROL NUMERATORS:

PHI/DA .491 (0) (.0644) (.257) (.656) (.956) (2.74) (5.75) [-.0922;.152][.604;.233][.617;2.39] <.000575>

THE/DB -.359 (0) (.03435) (.0699) (.744) (2.59) [.575;.0754][.526;.220][.621;2.46][.772;3.36] <-.166[illegible]-5>

PSI/DP -.785 (.0794) (.117) (.250) (.655) (.956) (2.72) (4.01) [-.0673;.0675][-.0819;.156][.796;3.47] <-.165E-4>

PHI/DB .0317 (0) (.0699) (-.125) (.126) (.373) (1.33) (1.56) (2.59) (3.76) [.505;.257][.700;1.93] <-.513E-6>

THE/DA .131 (0) (0) (.0644) (.0765) (.753) (5.75) [.002;.427][.206;.666][.600;2.35] <.000477>

PHI/DA ;THE/DB -.0762 (0) (.00650) (.0644) (.0699) (.746) (2.59) (5.75) [.582;.232][.619;2.40] <-.566E-5>

PHI/DA ;PSI/DP -.396 (.0530) (.0644) (.0794) (.256) (.656) (.956) (2.70) (4.01) (5.75) [-.0962;.163] <-.222E-4>

THE/DB ;PSI/DP .124 (.03396) (.0699) (.0794) (.115) (.744) (2.59) (4.01) [-.111;.0856][.780;3.47] <.216E-6>

PHI/DB ;PSI/DP -.0342 (.0557) (.0699) (.0794) (.0842) (-.132) (.170) (1.03) (2.59) (4.01) [.847;1.75] <.162E-5>

PHI/DP ;THE/DB -.0537 (0) (.03396) (.0699) (.0794) (-.0966) (.216) (.743) (2.59) (4.01) [.622;1.35] <.325E-6>

PHI/DC ;THE/DP -.0150 (0) (.00342) (.0699) (.363) (.485) (1.03) (2.59) [.581;.257][.661;3.56] <-.281E-5>

THE/DA ;PSI/DP -.0729 (.03332) (.0644) (.0794) (.417) (.435) (.753) (4.01) (5.75) [.0262;.612] <-.599E-6>

THE/DP ;PHI/DA .00329 (0) (.00319) (.0644) (.0794) (.365) (.560) (.773) (4.01) (5.75) [-.922;2.70] <.129E-5>

THE/DC ;PHI/DA .0174 (0) (.0335) (.0644) (1.00) (5.75) [.565;.176][.000;.427][.766;2.39] <.116E-4>

PSI/DA ;THE/DP -.00463 (.00656) (.0644) (.0699) (.561) (.548) (.756) (1.17) (-1.32) (2.59) (-4.69) (5.75) <-.265E-5>

PSI/DB ;PHI/DA .0175 (.0506) (.0644) (.0699) (.663) (-1.27) (2.59) (5.75) [.990;.613][-.215;1.20] <-.914E-5>

ID/DB ;PHI/DA .621 (0) (.0644) (.0699) (.709) (2.59) (5.75) [.583;.232][.0196;2.06][.618;2.40] <.0389>

TD/DA ;THE/DB -.135 (.00650) (.0644) (.0699) (.746) (2.59) (5.75) [.690;.225][.600;2.41][.0262;4.26] <-.000165>

ZD/DB ;PHI/DA .313 (0) (.0644) (.0699) (-.0620) (2.59) (5.75) [.590;.233][.0672;2.07][.623;2.41] <-.00681>

ZD/DC ;PHI/DA -.0622 (0) (.0644) (.329) (.583) (1.79) (5.75) [.570;.186][.606;2.67][-.697;2.67] <-.0114>

TD/DP ;THE/DB -.231 (.00399) (.0699) (.0794) (-.706) (.747) (1.36) (2.59) (4.01) [.172;.186][.512;3.37] <.166E-4>

ZD/DC ;PHI/DA -6.56 (0) (.0644) (.226) (.826) (2.66) (5.75) [.102;.137][.666;.268][.616;2.36] <-.00776>

PHI/DA ;THE/DB ;PSI/DP .0627 (.00634) (.0531) (.0644) (.0699) (.0794) (.746) (2.59) (4.01) (5.75) <.230E-6>

PHI/DC ;THE/DB ;PSI/DP .0306 (.03356) (.0525) (.0699) (.0794) (.370) (.479) (1.00) (2.59) (4.01) <.119E-6>

THE/DC ;PHI/DA ;PSI/DP -.0152 (.0172) (.0572) (.0644) (.0794) (.417) (.435) (1.56) (4.01) (5.75) <-.490E-6>

PSI/DC ;PHI/DA ;THE/DB -.0287 (0) (.0543) (.0644) (.0699) (.561) (.588) (.989) (2.59) (5.75) <-.358E-4>

ZD/DB ;PHI/DA ;PSI/DP -.498 (.0512) (.0644) (.0699) (.0794) (.709) (2.59) (4.01) (5.75) [.0195;2.06] <-.00170>

TD/DA ;THE/DB ;PSI/DP .112 (.00633) (.0644) (.0699) (.0794) (.746) (2.59) (4.01) (5.75) [-.0121;4.26] <.000139>

ZD/DC ;PHI/DA ;THE/DP 1.01 (0) (.0110) (.0644) (.0699) (2.39) (5.75) [.576;.223][.615;2.39] <.000212>

ZD/DC ;PHI/DA ;PSI/DP 5.29 (.0515) (.0644) (.0794) (.213) (.827) (2.60) (4.01) (5.75) [.382;.134] <.000265>

ID/DC ;PHI/DA ;THE/DB -.0120 (0) (.0644) (.0699) (2.55) (2.59) (5.75) [.584;.236][.567;2.42] <-.000672>

ID/DC ;PHI/DA ;PSI/DP .0648 (.0561) (.0644) (.0794) (.133) (.590) (1.66) (4.01) (5.75) [-.715;2.60] <.000906>

TD/DP ;PHI/DA ;THE/DB -.0739 (.00610) (.0644) (.0699) (.0794) (.742) (1.73) (-1.84) (2.59) (4.01) (5.75) <.155E-4>

ID/DB ;PHI/DA ;PSI/DP -.732 (.0533) (.0644) (.0699) (-.0773) (.0794) (2.59) (4.01) (5.75) [.0697;2.08] <.000277>

ID/DC ;PHI/DA ;THE/DB ;PSI/DP -.815 (.00960) (.0538) (.0644) (.0699) (.0794) (2.59) (4.01) (5.75) <-.892E-5>

ID/DC ;PHI/DA ;THE/DB ;PSI/DP .00834 (.0529) (.0644) (.0699) (.0794) (2.59) (2.83) (4.01) (5.75) <.283E-6>

MICROFILMED FROM
BEST AVAILABLE COPY

TABLE IV-5 CONTINUED
AH-1G TRANSFER FUNCTION FACTORS

CASE 63 60KT SCAS OFF

DENOMINATOR: (0) (.0725) (1.44)[-.0600;.264][.705;.820][.337;1.23]<.00739>
S R P SP D

CONTROL NUMERATORS:

PHI/DA .486 (0)[-.152;.319][.838;.789][.389;1.25]<.0480>
THE/DB -.157 (0) (.00426) (.0697) (.922) (1.34)[.334;1.23]<-.869E-4>
PSI/DP -.944 (-.135) (.221) (1.48)[-.0724;.299][.690;.828]<.00256>

PHI/DB .0211 (0) (.269) (-.315)[.286;1.21][.975;3.11]<-.0256>
PHI/DP .378 (0) (.360) (.951)[-.355;.330][.619;.821]<.00951>
PHI/DC .0659 (0) (.692) (1.30)[-.334;.441][.265;1.83]<.0387>

THE/DA .0853 (0) (-.00905) (.0608) (.895)[.359;1.24]<-.6498-4>
THE/DP .0545 (0) (-.00424) (.0676) (.985)[.487;.967]<-.279E-4>
THE/DC .0322 (0) (.00935) (.0655) (1.40) (2.83)[.309;1.27]<.000126>

PSI/DA .0269 (.807) (-1.46) (-8.34)[-.118;.311][.769;1.05]<.0146>
PSI/DB .0361 (.272) (-.368) (1.36)[.129;.952][-.502;1.33]<-.00787>
PSI/DC .294 (1.41)[-.488;.354][.185;.535][.942;.898]<.0120>

XD/DB 1.19 (0) (.0673) (.872) (1.34)[.334;1.23][.0204;2.11]<.633>
YD/DA .842 [-.185;.322][.817;.780][.341;1.22][.0237;4.31]<1.48>
ZD/DC -15.0 (0) (1.45)[.934;.0697][.180;.813][.354;1.21]<-.102>

XD/DC -.0864 (0) (.0608) (1.39) (3.14)[.320;1.27][-.0174;3.29]<-.402>
YD/DP 1.74 [-.587;.499][.305;.687][.878;.693][.363;1.63]<.259>
ZD/DB 3.00 (0) (-.0111) (.0492) (1.36)[.337;1.24][.0975;2.18]<-.0229>

PHI/DA ;THE/DB -.0763 (0) (.00737) (.909)[.398;1.25]<-.000790>
PHI/DA ;PSI/DP -.469 (.0765)[-.137;.314][.813;.782]<-.00216>
THE/DB ;PSI/DP .148 (.0163) (-.104) (.197) (.907) (1.33)<-.599E-4>

PHI/DB ;PSI/DP -.0338 (.0760) (.270) (-.327)[.638;2.36]<.00126>
PHI/DP ;THE/DB -.0594 (0) (.0146) (.981)[.823;.495]<-.000209>
PHI/DC ;THE/DB -.0110 (0) (0) (1.47)[.328;1.92]<-.0598>

THE/DA ;PSI/DP -.0811 (-.00778) (.893)[.119;.241]<.327E-4>
THE/DP ;PHI/DA .00286 (0) (-.00764) (.994)[-.557;2.12]<-.980E-4>
THE/DC ;PHI/DA .0158 (0) (.0224) (2.35)[.453;1.18]<.00116>

PSI/DA ;THE/DB -.00812 (.00730) (.891) (1.86) (-1.59) (-3.85)<-.000241>
PSI/DB ;PHI/DA .0176 (.0707) (.312) (-.540)[-.289;1.67]<-.000564>
PSI/DC ;THE/DB -.0472 (0)[-.124;.459][.999;1.37]<-.0187>

PSI/DC ;PHI/DA .141 (.0817)[-.235;.364][.961;.961]<.00142>
XD/DB ;PHI/DA .580 (0) (.854)[.397;1.25][.0216;2.12]<3.49>
XD/DB ;PSI/DP -1.12 (-.0991) (.199) (.867) (1.32)[.0200;2.11]<.113>

YD/DA ;THE/DB -.132 (.00731) (.910)[.335;1.21][.0241;4.34]<-.0248>
YD/DA ;PSI/DP -.842 [-.137;.314][.808;.781][-.0118;4.26]<-.918>
ZD/DC ;PHI/DA -7.31 (0) (.156)[.193;.684][.380;1.19]<-.758>

ZD/DC ;THE/DB 2.26 (0) (.00522) (.0704) (1.34)[.329;1.19]<.00159>
ZD/DC ;PSI/DP 14.2 (-.0631) (1.50)[.651;.159][.124;.818]<-.0214>
XD/DC ;PHI/DA -.0429 (0) (2.26)[.459;1.22][-.0834;3.39]<-1.67>

XD/DC ;THE/DB -.0248 (0) (.0433) (1.33) (2.42)[.351;1.33]<-.00609>
YD/DC ;PSI/DP .0951 (1.37) (3.77)[.551;.0695][.0362;1.04]<.0220>
YD/DP ;PHI/DA .527 (2.56) (-2.71)[-.135;.313][.806;.781]<-.219>

YD/DP ;THE/DB -.273 (.0169) (.959)[-.197;.727][.387;1.61]<-.00606>
ZD/DB ;PHI/DA 1.45 (0) (-.00789)[.405;1.27][.0905;2.17]<-.0868>
ZD/DB ;PSI/DP -2.81 (.205) (1.36)[-.921;.0672][.0932;2.19]<-.0171>

PHI/DA ;THE/DB ;PSI/DP .0735 (.00683) (.0762) (.899)<.348E-4>
PHI/DC ;THE/DB ;PSI/DP .0283 (0) (.0768) (1.44)<.00312>
THE/DC ;PHI/DA ;PSI/DP -.0161 (.0181) (.0775) (2.19)<-.493E-4>

TABLE IV-5 CONTINUED
AH-IG TRANSFER FUNCTION FACTORS

CASE 63 60KT SCAS OFF

CONTROL NUMERATORS CONCLUDED:

PSI/DC ;PHI/DA ;THE/DB -.0227 (.00376) (.0839) (1.36) <-.970E-5>

XD/DB ;PHI/DA ;PSI/DP -.558 (.0763) (.850)[.0211;2.12]<-.162>
YD/DA ;THE/DB ;PSI/DP .132 (.00680) (.900)[-.00857;4.25]<.0146>
ZD/DC ;PHI/DA ;THE/DB 1.10 (0) (.00895)[.395;1.22]<.0146>

ZD/DC ;THE/DB ;PSI/DP -2.13 (-.0615) (1.34)[.943;.0791]<.00110>
ZD/DC ;PHI/DA ;PSI/DP 7.08 (.0762) (.141)[.149;.692]<.0365>
XD/DC ;PHI/DA ;THE/DB -.0121 (0) (2.50)[.382;1.37]<-.0568>

XD/DC ;PHI/DA ;PSI/DP .0495 (.0772) (1.99)[-.122;3.39]<.0875>
XD/DC ;THE/DB ;PSI/DP .0226 (-.195) (.309) (1.31) (2.51) <-.00446>
YD/DP ;PHI/DA ;THE/DB -.0827 (.00682) (.896) (2.55) (-2.71) <.00388>

ZD/DB ;PHI/DA ;PSI/DP -1.40 (-.00582) (.0764)[.0889;2.18]<.00298>

ZD/DC ;PHI/DA ;THE/DB ;PSI/DP -1.06 (.00796) (.0768) <-.000648>
XD/DC ;PHI/DA ;THE/DB ;PSI/DP .0114 (.0752) (2.69) <.00231>

GUST NUMERATORS:

PHI/UG .00281 (0) (0) (0)[.593;1.03][.458;1.55]<.00717>
THE/UG -.00201 (0) (0) (.0729)[.976;1.03][.350;1.22]<-.000230>
PSI/UG .00452 (0) (0) (1.30)[-.268;.667][.592;.919]<.00220>

PHI/VG .00520 (0) (0) (.889)[-.0837;.280][.734;.796]<.000230>
THE/VG -.000139 (0) (0) (0) (.0342) (-2.40)[.898;.761]<.660E-5>
PSI/VG -.0143 (0) (0) (1.48)[-.0456;.265][.707;.813]<-.000983>

PHI/WG .00280 (0) (0) (.551)[-.855;.537][.198;1.65]<.00121>
THE/WG .00300 (0) (0) (.0118) (.0664) (1.67)[.316;1.25]<.610E-5>
PSI/WG .00904 (0) (.648) (1.25)[-.558;.379][.203;.600]<.000376>

PHI/PG 1.27 (0)[-.0847;.260][.775;.865][.392;1.27]<.103>
THE/PG -.180 (0) (.0358) (.909)[.0762;.157][.361;1.21]<-.000212>
PSI/PG .319 (1.06)[-.0830;.261][.710;.930][-.528;1.26]<.0313>

PHI/QG .681 (0) (.463) (.930)[-.503;.492][.391;1.23]<.108>
THE/QG .321 (0) (.00413) (.0674) (.845) (1.73)[.343;1.23]<.000198>
PSI/QG -.296 (.399) (-.504) (1.72)[-.209;.443][.611;1.27]<.0328>

PHI/RG -.0312 (0) (3.38) (-8.10)[-.111;.277][.770;.837]<.0233>
THE/RG -.0201 (0) (0) (.0367) (-.383) (.974)[.510;1.58]<.000691>
PSI/RG .915 (1.40)[-.183;.266][.0714;.348][.734;.820]<.00739>

XD/UG .0228 (0) (.0733)[.988;.983][.346;1.21][.0600;1.77]<.00739>
ZD/UG .0740 (0) (0) (.0731) (1.11)[.313;1.19][.228;1.65]<.0233>
YD/VG .102 (0) (.928)[-.0913;.278][.742;.784][.407;1.28]<.00739>

XD/WG -.00348 (0) (0) (.0627) (1.86)[.321;1.25][.0182;5.00]<-.0156>
ZD/WG .841 (0) (.0728) (.597) (1.27)[-.242;.322][.342;1.24]<.00739>

PHI/UG ;THE/DB -.000398 (0) (0) (.882)[.350;1.54]<-.000795>
PHI/UG ;PSI/DP -.00436 (0) (0) (.0772)[.636;1.02]<-.000352>
THE/UG ;PHI/DA -.000969 (0) (0) (.960)[.378;1.27]<-.00149>

THE/UG ;PSI/DP .00188 (0) (-.152) (.297)[.967;.968]<-.796E-4>
PSI/UG ;PHI/DA .00212 (0) (0) (.0888)[.484;.879]<.000146>
PSI/UG ;THE/DB -.000637 (0) (.828) (1.38)[-.211;.581]<-.000245>

PHI/VG ;THE/DB -.000813 (0) (0) (.00440)[.977;.869]<-.270E-5>
PHI/VG ;PSI/DP .000501 (0) (.558) (1.25)[-.389;.478]<.797E-4>
THE/VG ;PHI/DA -.543E-4 (0) (0) (-.0115) (.706) (4.57) <.202E-5>

THE/VG ;PSI/DP .000187 (0) (0) (-.00301) (1.30) (1.95) <-.143E-5>
PSI/VG ;PHI/DA -.00710 (0)[-.148;.320][.827;.790]<-.000455>
PSI/VG ;THE/DB .00225 (0) (0) (.00658) (.942) (1.33) <.186E-4>

TABLE IV-5 CONTINUED
AH-1G TRANSFER FUNCTION FACTORS

CASE 63 60KT SCAS OFF

GUST NUMERATOR CONTINUED:

```
 PHI/WG ;THE/DB  -.000503 (0) (0) (-.00438)[ .311;1.76 ]<-.681E-5>
 PHI/WG ;PSI/DP  -.00606  (0) (.0780) (.543)[ -.467;.497 ]<-.634E-4>
 THE/WG ;PHI/DA   .00147  (0) (0) (.0226)[ .434;1.23 ]<.503E-4>

 THE/WG ;PSI/DP  -.00287  (0) (-.0673) (1.79)[ .790;.101 ]<.353E-5>
 PSI/WG ;PHI/DA   .00432  (0) (.0912) (.695)[ -.279;.401 ]<.440E-4>
 PSI/WG ;THE/DB  -.00153  (0) (-.00423) (1.37)[ -.114;.483 ]<.206E-5>

 PHI/PG ;THE/DB  -.195  (0) (.00658) (.917)[ .388;1.29 ]<-.00195>
 PHI/PG ;PSI/DP  -1.32  (.0768)[ -.0788;.252 ][ .755;.889 ]<-.00464>
 THE/PG ;PHI/DA  -.0846  (0) (.00403) (.882)[ .383;1.26 ]<-.000476>

 THE/PG ;PSI/DP   .169  (-.00295) (-.414) (.914)[ .468;.487 ]<.448E-4>
 PSI/PG ;PHI/DA   .121  (0) (-.0861) (.161)[ .445;1.00 ]<-.00168>
 PSI/PG ;THE/DB  -.0435  (.00660) (.912) (1.43)[ -.531;1.26 ]<-.000595>

 PHI/QG ;THE/DB  -.114  (0) (.00441) (.835)[ .435;1.18 ]<-.000580>
 PHI/QG ;PSI/DP  -.531  (.0760) (.474) (.923)[ -.507;.526 ]<-.00489>
 THE/QG ;PHI/DA   .158  (0) (.0106) (.849)[ .387;1.25 ]<.00223>

 THE/QG ;PSI/DP  -.301  (-.0662) (.828) (1.73)[ .938;.0824 ]<.000193>
 PSI/QG ;PHI/DA  -.162  (.0428) (-.156) (.176)[ .403;1.11 ]<.000238>
 PSI/QG ;THE/DB   .0347  (.00492) (-.570) (.696)[ .999;1.69 ]<-.000174>

 PHI/RG ;THE/DB   .00532  (0) (.00441) (.939) (3.37) (-3.69) <-.000274>
 PHI/RG ;PSI/DP  -.316  (.0759)[ -.135;.300 ][ .810;.817 ]<-.00144>
 THE/RG ;PHI/DA  -.00988  (0) (-.0115) (.830)[ -.0439;1.47 ]<.000204>

 THE/RG ;PSI/DP   .0154  (-.00890) (.979) (-2.76)[ .156;.275 ]<.279E-4>
 PSI/RG ;PHI/DA   .486  (.0742)[ -.136;.311 ][ .807;.793 ]<.00201>
 PSI/RG ;THE/DB  -.143  (.00441) (.931) (1.35)[ -.0374;.331 ]<-.869E-4>

  XD/UG ;PHI/DA   .0111  (0) (.873)[ .375;1.27 ][ .0470;1.76 ]<.0480>
  XD/UG ;THE/DB  -.00119  (0) (.0441) (.795) (1.28)[ .333;1.28 ]<-.869E-4>
  XD/UG ;PSI/DP  -.0213  (-.153) (.297)[ .978;.931 ][ .0631;1.75 ]<.00256>

  ZD/UG ;PHI/DA   .0358  (0) (0)[ .338;1.28 ][ .188;1.60 ]<.151>
  ZD/UG ;THE/DB  -.00560  (0) (0) (.0671) (1.48)[ .408;1.33 ]<-.000985>
  ZD/UG ;PSI/DP  -.0694  (0) (-.158) (.282) (1.03)[ .184;1.59 ]<.00806>

  YD/VG ;PHI/DA   .0454  (0) (.794)[ -.127;.311 ][ .791;.758 ]<.00201>
  YD/VG ;THE/DB  -.0161  (0) (.00440) [ .974;.886 ][ .417;1.25 ]<-.869E-4>
  YD/VG ;PSI/DP  -.0717  (-.249) (1.53)[ .0770;.397 ][ .814;.772 ]<.00256>

  XD/WG ;PHI/DA  -.00171  (0) (0)[ .428;1.26 ][ -.0700;5.14 ]<-.0717>
  XD/WG ;THE/DB  -.00304  (0) (0) (.0532) (1.30)[ .330;1.27 ]<-.000339>
  XD/WG ;PSI/DP   .00367  (0) (-.0203) (.0996) (2.08)[ .0890;4.65 ]<-.000335>

  ZD/WG ;PHI/DA  -.0409  (0) (0) (.574)[ -.310;.361 ][ .407;1.25 ]<-.00480>
  ZD/WG ;THE/DB  -.141  (0) (.00426) (.0697) (1.36)[ .345;1.23 ]<-.869E-4>
  ZD/WG ;PSI/DP  -.793  (-.144) (.251) (.587) (1.28)[ -.242;.345 ]<.00256>

  XD/UG ;  ZD/DC  -.336  (0) (.0701) (1.02)[ .346;1.16 ][ .0745;1.78 ]<-.102>
  YD/VG ;  ZD/DC  -1.53  (0) (.0793) (.916)[ .140;.737 ][ .394;1.30 ]<-.102>

 PHI/UG ;THE/DB ;PSI/DP    .000616  (0) (.0760) (.838) <.393E-4>
 THE/UG ;PHI/DA ;PSI/DP    .000922  (0) (.0764) (.954) <.672E-4>
 PSI/UG ;PHI/DA ;THE/DB   -.000299  (0) (.0719) (.815) <-.175E-4>

 PHI/VG ;THE/DB ;PSI/DP   -.853E-4  (0) (.0168) (1.30) <-.186E-5>
 THE/VG ;PHI/DA ;PSI/DP    .941E-4  (0) (-.00791) (1.37) <-.102E-5>
 PSI/VG ;PHI/DA ;THE/DB    .00112  (0) (.00730) (.920) <.750E-5>

 PHI/WG ;THE/DB ;PSI/DP    .00105  (0) (-.00321) (.0776) <-.262E-6>
 THE/WG ;PHI/DA ;PSI/DP   -.00144  (0) (.0192) (.0785) <-.217E-5>
 PSI/WG ;PHI/DA ;THE/DB   -.000729  (0) (.00185) (.0983) <-.133E-6>
```

TABLE IV-5 CONTINUED
AH-1G TRANSFER FUNCTION FACTORS

CASE 63 60KT SCAS OFF

GUST NUMERATORS CONCLUDED:

PHI/PG ;THE/DB ;PSI/DP .200 (.00620) (.0763) (.910)<.863E-4>
THE/PG ;PHI/DA ;PSI/DP .0809 (.00403) (.0759) (.865)<.214E-4>
PSI/PG ;PHI/DA ;THE/DB -.0160 (.00406) (.0867) (.987)<-.557E-5>

PHI/QG ;THE/DB ;PSI/DP .0941 (.00332) (.0760) (.816)<.193E-4>
THE/QG ;PHI/DA ;PSI/DP -.151 (.0105) (.0760) (.829)<-.000100>
PSI/QG ;PHI/DA ;THE/DB .0200 (.0114) (.0841) (1.17)<.224E-4>

PHI/RG ;THE/DB ;PSI/DP .0490 (.00568) (.0759) (.946)<.200E-4>
THE/RG ;PHI/DA ;PSI/DP .00691 (-.0192) (.0819) (.471)<-.511E-5>
PSI/RG ;PHI/DA ;THE/DB -.0696 (.00645) (.0740) (.921)<-.306E-4>

XD/UG ;PHI/DA ;THE/DB -.000581 (0) (.808)[.375; 1.10]<-.000790>
XD/UG ;PHI/DA ;PSI/DP -.0106 (.0764) (.871)[.0427; 1.76]<-.00216>
XD/UG ;THE/DB ;PSI/DP .00111 (-.179) (.310) (.791) (1.23)<-.599E-4>

ZD/UG ;PHI/DA ;THE/DB -.00272 (0) (0)[.489; 1.38]<-.00510>
ZD/UG ;PHI/DA ;PSI/DP -.0342 (0) (.0765)[.111; 1.61]<-.00681>
ZD/UG ;THE/DB ;PSI/DP .00526 (0) (-.234) (.386) (1.52)<-.000721>

YD/VG ;PHI/DA ;THE/DB -.00712 (0) (.00644)[.991; .816]<-.306E-4>
YD/VG ;PHI/DA ;PSI/DP -.0361 [-.136; .313][.804; .781]<-.00216>
YD/VG ;THE/DB ;PSI/DP .0112 (.0162) (-.216) (1.12) (1.36)<-.598E-4>

XD/WG ;PHI/DA ;THE/DB -.00148 (0) (0)[.376; 1.29]<-.00248>
XD/WG ;PHI/DA ;PSI/DP .00190 (0) (.0779)[-.302; 4.94]<.00361>
XD/WG ;THE/DB ;PSI/DP .00284 (0) (-.154) (.270) (1.26)<-.000149>

ZD/WG ;PHI/DA ;THE/DB -.0686 (0) (.00728)[.408; 1.26]<-.000790>
ZD/WG ;PHI/DA ;PSI/DP -.394 (.0765) (.562)[-.310; .358]<-.00216>
ZD/WG ;THE/DB ;PSI/DP .133 (.0164) (-.106) (.190) (1.36)<-.599E-4>

XD/UG ; ZD/DC ;PHI/DA -.163 (0)[.361; 1.22][.0603; 1.76]<-.758>
XD/UG ; ZD/DC ;THE/DB .0180 (0) (.0440) (1.25)[.326; 1.27]<.00159>
XD/UG ; ZD/DC ;PSI/DP .314 (-.112) (.219) (.913)[.0786; 1.75]<-.0214>

YD/VG ; ZD/DC ;PHI/DA -.677 (0) (.109) (.797)[.106; .713]<-.0300>
YD/VG ; ZD/DC ;THE/DB .230 (0) (.00544) (.770)[.411; 1.28]<.00159>
YD/VG ; ZD/DC ;PSI/DP 1.09 (-.0866) (.227) (1.51)[.0727; .813]<-.0214>

XD/UG ;PHI/DA ;THE/DB ;PSI/DP .000556 (.0766) (.808)<.344E-4>
ZD/UG ;PHI/DA ;THE/DB ;PSI/DP .00260 (0) (.0772)<.000201>
YD/VG ;PHI/DA ;THE/DB ;PSI/DP .00565 (.00682) (.993)<.344E-4>

XD/WG ;PHI/DA ;THE/DB ;PSI/DP .00142 (0) (.0746)<.000104>
ZD/WG ;PHI/DA ;THE/DB ;PSI/DP .0660 (.00683) (.0763)<.344E-4>
XD/UG ; ZD/DC ;PHI/DA ;THE/DB .00880 (0)[.365; 1.29]<.0186>

YD/VG ; ZD/DC ;PHI/DA ;THE/DB .102 (0) (.00775) (.694)<.000547>
YD/VG ; ZD/DC ;PHI/DA ;PSI/DP .584 (.139)[.149; .[illegible]]<.0165>
XD/WG ; ZD/DC ;PHI/DA ;THE/DB .0322 (0)[.348; 1.33]<.0568>

XD/UG ; ZD/DC ;PHI/DA ;THE/DB ;PSI/DP -.00842 (.0770)<-.000648>
YD/VG ; ZD/DC ;PHI/DA ;THE/DB ;PSI/DP -.0819 (.00796)<-.000648>
XD/WG ; ZD/DC ;PHI/DA ;THE/DB ;PSI/DP -.0306 (.0752)<-.00231>

TABLE IV-[illegible] CONTINUED

AH-[illegible]G TRANSF[illegible]NCTION FACTORS

CASE 63 60KT SCAS ON

DENOMINATOR: [illegible]

CONTROL NUMERATORS:

PHI/DA [illegible]

THE/DA [illegible]

PSI/DP [illegible]

PHI/DA [illegible]

PHI/DP [illegible]

PHI/DC [illegible]

THE/DA [illegible]

THE/DP [illegible]

THE/DC [illegible]

PSI/DA [illegible]

PSI/DB [illegible]

PSI/DC [illegible]

ZD/DB [illegible]

ZD/DA [illegible]

ZD/DC [illegible]

ZD/DC [illegible]

ZD/DA [illegible]

ZD/DP [illegible]

PHI/DA ;THE/DB [illegible]

PHI/DA ;PSI/DP [illegible]

THE/DB ;PSI/DP [illegible]

PHI/DB ;PSI/DP [illegible]

PHI/DP ;THE/DB [illegible]

PHI/DC ;THE/DB [illegible]

THE/DA ;PSI/DP [illegible]

THE/DP ;PHI/DA [illegible]

THE/DC ;PHI/DA [illegible]

PSI/DA ;THE/DB [illegible]

PSI/DB ;PHI/DA [illegible]

PSI/DC ;THE/DB [illegible]

PSI/DC ;PHI/DA [illegible]

ZD/DB ;PHI/DA [illegible]

ZD/DB ;PSI/DP [illegible]

ZD/DA ;THE/DP [illegible]

ZD/DA ;PSI/DP [illegible]

ZD/DC ;PHI/DA [illegible]

ZD/DC ;THE/DB [illegible]

ZD/DC ;PSI/DP [illegible]

ZD/DC ;PHI/DA [illegible]

ZD/DC ;THE/DB [illegible]

ZD/DC ;PSI/DP [illegible]

ZD/DA ;PHI/DA [illegible]

ZD/DB ;PSI/DP [illegible]

PHI/DA ;THE/DB ;PSI/DP [illegible]

PHI/DC ;THE/DB ;PSI/DP [illegible]

THE/DC ;PHI/DA ;PSI/DP [illegible]

MICROFILMED FROM
BEST AVAILABLE COPY

TABLE IV-5 CONTINUED
AH-1G TRANSFER FUNCTION FACTORS
CASE 63 60KT SCAS ON

CONTROL NUMERATORS CONCLUDED:

PSI/DC ;PHI/DA ;THE/DB -.0227 (.00376) (.0644) (.0699) (.0839) (.581) (.588) (1.36) (2.59) (5.75)<-.207E-6>

ID/DB ;PHI/DA ;PSI/DP -.558 (.0684) (.0699) (.0763) (.0794) (.650) (2.59) (4.01) (5.75)[.0211;2.12]<-.003A6>
YD/DA ;THE/DB ;PSI/DP .132 (.00688) (.0644) (.0699) (.0794) (.900) (2.59) (4.01) (5.75)[-.00857;4.25]<.000311>
ID/DC ;PHI/DA ;THE/DB 1.13 (0) (.00893) (.0644) (.0699) (2.59) (5.75)[.610;.261](.623;2.67)<.000119>

ID/DC ;THE/DB ;PSI/DP -2.13 (-.0461) (.0699) (.0794) (.0840) (2.59) (4.01)[.687;.0643](.789;3.45)<.238E-4>
ID/DC ;PHI/DA ;PSI/DP 7.08 (.0644) (.0764) (.0794) (.199) (.659) (2.51) (4.01) (5.75)[.494;.169)<.000776>
ID/DC ;PHI/DA ;THE/DB -.0121 (0) (.0644) (.0699) (2.55) (2.59) (5.75)[.645;.281](.597;2.75)<-.00124>

ID/DC ;PHI/DA ;PSI/DP .0895 (.0644) (.0771) (.0794) (.139) (.553) (2.20) (4.01) (5.75)[-.787;3.17)<.00187>
ID/DC ;THE/DB ;PSI/DP .0226 (.0699) (.0794) (-.113) (2.59) (2.62) (4.01)[.783;.142](.769;3.50)<-.951E-4>
YD/DP ;PHI/DA ;THE/DB -.0827 (.00682) (.0644) (.0699) (.0794) (.896) (2.55) (2.59) (-2.71) (4.01) (5.75) <.743E-4>

ID/DB ;PHI/DA ;PSI/DP -1.40 (-.00582) (.0644) (.0699) (.0764) (.0794) (2.59) (4.01) (5.75 [.0889;2.14)<.635E-4>

ID/DC ;PHI/DA ;THE/DB ;PSI/DP -1.06 (.00796) (.0644) (.0699) (.0768) (.0794) (2.59) (4.01) (5.75)<-.138E-4>
ID/DC ;PHI/DA ;THE/DB ;PSI/DP .0114 (.0644) (.0699) (.0752) (.0794) (2.59) (2.69) (4.01) (5.75)<.492E-4>

GUST NUMERATORS:

PHI/UG .00281 (0) (0) (0) (.258) (.366) (.623) (1.03) (1.43) (2.46)[.632;.272](.679;3.11)<.000430>
THE/UG -.00205 (0) (0) (.415) (.436) (.954) (.490;.0374](.639;.271](.598;2.67](.761;3.33)<-.287E-5>
PSI/UG .00452 (0) (0) (.665)[.998;.238](-.176;.281](.998;.548](.933;1.72](.765;3.31)<.000128>

PHI/VG .00520 (0) (0) (.232) (.256) (.739) (1.17) (2.62)[-.110;.0972](.832;.459](.843;1.83)<.287E-5>
THE/VG -.000139 (0) (0) (0) (-.00574) (.0247) (.126) (2.51)[.998;.433](.946;1.44](.322;5.96)<.858E-7>
PSI/VG -.0143 (0) (0) (.0349) (.259) (.539) (.593) (.676) (1.21) (2.62)[.00131;.141](.794;3.44)<-.210E-4>

PHI/WG .00280 (0) (0) (.259) (.365) (.773) (1.04) (2.71)[-.0832;.208](.623;.274](.638;3.79)<.268E-4>
THE/WG .00300 (0) (0) (.00575) (.422) (.430)[.698;.0647](.618;.252](.657;2.92](.799;3.23)<.748E-7>
PSI/WG .00904 (0) (0) (.209) (.264) (.531) (.626) (.710) (3.11)[-.335;.202](.110;.216](.770;3.40)<.803E-5>

PHI/PG 1.27 (0) (.259) (.370) (.664) (1.01) (1.27) (2.58)[-.0301;.126](.637;.269](.631;2.71)<.00225>
THE/PG -.180 (0) (-.00659) (.0889) (-.0592) (.415) (.436) (.868)[.658;.284](.637;2.80](.615;2.97)<-.276E-5>
PSI/PG .319 (.269) (.284) (.467)[-.0170;.128](.999;.549](-.0687;.597](.762;1.90](.720;2.55)<.000669>

PHI/QG .681 (0) (.260) (.373) (1.07) (2.68)[-.0952;.210](.650;.268](.993;.768](.611;2.57)<.00236>
THE/QG .321 (0) (.00205) (.415) (.436) (.830)[.637;.0625](.618;.266](.614;2.78](.825;3.45)<.237E-5>
PSI/QG -.296 (.253) (-.351) (.667)[-.0759;.182](.883;.271](.998;.548](.769;1.94](.831;3.81)<.000703>

PHI/RG .507 (0) (.259) (.357) (.679) (1.04) (1.31) (2.51) (3.32)[-.0192;.132](.614;.283)<.000519>
THE/RG -.0247 (0) (0) (.0464) (-.184) (.351)[.997;.479](.571;.758](-.119;1.04](.819;3.87)<.000159>
PSI/RG .915 (.173) (.259) (.540) (.589) (.675) (1.25) (2.51)[-.0822;.127](-.116;.175](.782;3.41)<.000158>

ID/DG .0228 (3) (.879)[.488;.0178](.639;.273](.980;.420](.318;1.75](.590;2.71](.761;3.35)<.923E-4>
ZD/DG .0740 (0) (0)[.498;.0175](.638;.266](.958;.409](.550;1.59](.604;2.84](.764;3.38)<.000290>
YD/VG .102 (0) (.130) (.259) (.673) (1.19) (2.62)[-.0703;.0811](.128;.181](.734;2.26](.664;3.40)<.922E-4>

ID/BG .0397 (0) (0) (.336) (.556) (-2.25)[.593;.0619](.623;.256](.622;2.90](.805;3.32)<-.000391>
ZD/BG .841 (0) (.252) (.763) (3.01)[.469;.0370](.00719;.152](.638;.268](.628;2.75](.779;3.35)<.923E-4>

PHI/UG ;THE/DB -.000398 (0) (0) (.0699) (.366) (.837) (1.03) (2.59)[.632;.272](.689;3.23)<-.175E-4>
PHI/UG ;PSI/DP -.00436 (0) (0) (.0765) (.0794) (.257) (.370) (.623) (1.00) (1.52) (2.15) (4.01) <-.206E-4>
THE/UG ;PHI/DA -.000969 (0) (0) (.0644) (.415) (.436) (.954) (5.75)[.635;.273](.607;2.66)<-.327E-4>

THE/UG ;PSI/DP .00188 (0) (.0794) (-.0887) (.417) (.435) (.954) (4.01)[.782;.127](.789;3.39)<-.170E-5>
PSI/UG ;PHI/DA .00212 (0) (0) (.0644) (.0775) (.289) (.665) (5.75)[.994;.543](.916;1.73)<.895E-5>
PSI/UG ;THE/DB -.000637 (0) (.0699) (.216) (.541) (.588) (.816) (2.59)[-.184;.271](.762;3.29)<-.522E-5>

PHI/VG ;THE/DB -.000813 (0) (0) (.00299) (.0699) (.216) (.952) (2.59)[.822;.423](.848;1.85)<-.329E-7>
PHI/VG ;PSI/DP .000501 (0) (.0799) (.260) (.370) (.768) (1.00) (1.48) (2.81) (4.01)[-.0219;.196)<.170E-5>
THE/VG ;PHI/DA -.000575 (0) (0) (-.00286) (.0644) (.120) (5.75)[.998;.433](.967;1.80)<.268E-7>

THE/VG ;PSI/DP .000187 (0) (0) (-.00327) (.0506) (.0794) (.917) (.935) (1.17) (4.01)[.866;3.55)<-.308E-7>
PSI/VG ;PHI/DA -.00716 (0) (.0644) (.259) (.539) (.592) (.677) (1.21) (2.58) (5.75)[-.0299;.145)<-.970E-5>
PSI/VG ;THE/DB .00225 (0) (0) (.00647) (.0412) (.0699) (.581) (.588) (.920) (2.59)[.798;3.65)<.397E-6>

TABLE IV-5 CONTINUED
AH-IG TRANSFER FUNCTION FACTORS

CASE 63 60KT SCAS ON

GUST NUMERATORS CONTINUED:

PHI/WG ;THE/DB -.000501 (0) (0) (-.0064) (.0699) (.365) (1.03) (2.59)[.629;.274][.674;1.66]<-.189E-6>
PHI/WG ;PSI/DP -.00[illegible] (0) (.0779) (.0794) (.260) (.372) (.776) (1.00) (2.59) (4.01)[-.0913;.205]<-.135E-5>
THE/WG ;PHI/DA .00147 (0) (0) (.0225) (.0644) (.422) (.431) (5.75)[.638;.259][.653;2.72]<-.110E-5>

THE/WG ;PSI/DP -.00787 (0) (-.0523) (.0794) (.110) (.417) (.435) (4.01)[.579;.0798][.835;3.54]<-.758E-7>
PSI/WG ;PHI/DA .00432 (0) (.0644) (.0922) (.263) (.531) (.627) (.710) (3.19) (5.75)[-.0491;.179]<-.939E-6>
PSI/WG ;THE/DB -.00151 (0) (-.00423) (.0699) (.211) (.541) (.588) (2.59)[-.131;.224][.770;3.34]<-.440E-7>

PHI/PG ;THE/DB -.195 (0) (.03657) (.0699) (.373) (.912) (1.00) (2.59)[.638;.269][.626;2.74]<-.827E-6>
PHI/PG ;PSI/DP -1.32 (.0767) (.0794) (.258) (.370) (.868) (1.00) (1.31) (2.45) (4.01)[-.0256;.123]<-.989E-6>
THE/PG ;PHI/DA -.0846 (0) (.00403) (.0644) (.415) (.436) (.866) (5.75)[.633;.272][.615;2.66]<-.104E-6>

THE/PG ;PSI/DP .169 (-.00295) (.0794) (-.152) (.417) (.435) (.865) (4.01)[.734;.160][.642;3.15]<.956E-6>
PSI/PG ;PHI/DA .115 (0) (-.0154) (.0644) (.129) (.247) (.667) (5.75)[.998;.587][.836;1.86]<-.328E-6>
PSI/PG ;THE/DB -.0435 (.00660) (.0699) (.291) (.541) (.588) (.987) (2.59)[-.0910;.630][.632;2.59]<-.127E-6>

PHI/QG ;THE/DB -.118 (0) (.00439) (.0699) (.371) (.908) (1.01) (2.59)[.638;.266][.630;2.54]<-.126E-6>
PHI/QG ;PSI/DP -.531 (.0763) (.0794) (.260) (.370) (1.00) (2.93) (4.01)[-.0755;.216][.998;.788]<-.000108>
THE/QG ;PHI/DA .158 (0) (.0106) (.0644) (.415) (.436) (.830) (5.75)[.633;.272][.619;2.67]<.889E-6>

THE/QG ;PSI/DP -.301 (-.0509) (.0798) (.0864) (.417) (.435) (.829) (4.01)[.705;.0722][.829;3.53]<.811E-5>
PSI/QG ;PHI/DA -.162 (.0396) (.0644) (-.0804) (.137) (.244) (.668) (5.75)[.998;.588][.745;1.97]<.899E-5>
PSI/QG ;THE/DB .0349 (.00842) (.0699) (-.319) (.541) (.588) (1.17) (2.59)[.827;.268][.883;3.85]<-.372E-5>

PHI/RG ;THE/DB -.0797 (0) (.00845) (.0699) (.357) (.935) (1.09) (2.59) (3.30)[.624;.281]<-.611E-5>
PHI/RG ;PSI/DP -.316 (.0759) (.0798) (.259) (.370) (.679) (1.00) (1.28) (2.51) (4.01)[-.0357;.139]<-.308E-6>
THE/RG ;PHI/DA -.00988 (0) (-.0127) (.0644) (.351) (5.75)[.998;.488][.572;.599][.105;1.81]<.855E-5>

THE/RG ;PSI/DP .0154 (-.00889) (.0798) (.417) (.435) (.842) (-.571) (4.01)[.541;.232][.437;2.35]<.595E-6>
PSI/RG ;PHI/DA .446 (.0644) (.0781) (.259) (.540) (.589) (.676) (1.25) (2.51) (5.75)[-.0116;.181]<.828E-8>
PSI/RG ;THE/DB -.143 (.00441) (.0699) (.178) (.541) (.588) (.921) (2.59)[-.163;.166][.781;3.40]<-.185E-5>

ED/UG ;PHI/DA .0111 (0) (.0648) (.677) (5.75)[.636;.271][.980;.420][.307;1.77][.605;2.67]<.00105>
ED/UG ;THE/DB -.00119 (0) (.0699) (.808) (2.59)[.571;.0308][.650;.277][.611;2.74][.775;3.33]<-.106E-5>
ED/UG ;PSI/DP -.0213 (.0794) (-.0896) (.877) (4.01)[.784;.127][.980;.420][.310;1.75][.752;3.43]<.546E-8>

ED/UG ;PHI/DA .0358 (0) (0) (.0644) (5.75)[.639;.269][.957;.409][.531;1.64][.612;2.76]<.00331>
ED/UG ;THE/DB -.00560 (0) (0) (.0699) (2.59)[.355;.0387][.687;.289][.643;2.86][.795;3.32]<-.114E-8>
ED/UG ;PSI/DP -.0694 (0) (.0794) (-.0941) (4.01)[.802;.123][.958;.409][.532;1.63][.765;3.53]<.000172>

TD/VG ;PHI/DA .0854 (0) (.0648) (.0735) (.259) (.673) (1.19) (2.62) (5.75)[-.0227;.181][.667;2.28]<.698E-8>
TD/VG ;THE/DB -.0161 (0) (.00289) (.0699) (.129) (.893) (2.59)[.151;.135][.781;2.28][.661;3.38]<-.106E-5>
TD/VG ;PSI/DP -.0717 (.0798) (.120) (-.125) (.259) (.673) (1.20) (2.59) (4.01)[.0816;.157][.803;3.45]<.546E-8>

ED/UG ;PHI/DA .0215 (0) (0) (.0648) (.336) (.557) (-2.04) (5.75)[.637;.262][.634;2.75]<-.00159>
ED/UG ;THE/DB -.00304 (0) (0) (.0699) (2.59)[.535;.0389][.643;.275][.611;2.74][.778;3.33]<-.525E-5>
ED/UG ;PSI/DP .00367 (0) (-.0157) (.0798) (.336) (.556) (-2.35) (4.01) (-9.77)[.905;.0826][.829;3.66]<-.710E-5>

ED/UG ;PHI/DA .409 (0) (.0644) (.252) (.764) (3.04) (5.75)[-.0527;.151][.680;.269][.628;2.68]<.00105>
ED/UG ;THE/DB -.141 (0) (.00273) (.0699) (2.59)[.544;.0508][.632;.265][.627;2.76][.780;3.32]<-.106E-5>
ED/UG ;PSI/DP -.793 (.0798) (-.0842) (.252) (.764) (3.01) (4.01)[.815;.121][-.0391;.155][.798;3.48]<.546E-8>

ED/UG ; ED/DC -.338 (0)[.558;.0359][.628;.269][.976;.417][.386;1.76][.578;2.68][.761;3.35]<-.00132>
TD/VG ; ED/DC -1.53 (0) (.0394) (.201) (.861) (2.63)[.729;.144][.273;.201][.731;2.22][.664;3.40]<-.00132>

PHI/UG ;THE/DB ;PSI/DP .000616 (0) (.0699) (.0760) (.0798) (.370) (.838) (1.00) (2.59) (4.01) <.838E-6>
THE/UG ;PHI/DA ;PSI/DP .000922 (0) (.0644) (.0764) (.0798) (.417) (.435) (.958) (4.01) (5.75) <.181E-5>
PSI/UG ;PHI/DA ;THE/DB -.000299 (0) (.0644) (.0699) (.0719) (.541) (.588) (.815) (2.59) (5.75) <-.374E-6>

PHI/VG ;THE/DB ;PSI/DP -.853E-6 (0) (.0168) (.0699) (.0798) (.370) (1.00) (1.30) (2.59) (4.01) <-.397E-7>
THE/VG ;PHI/DA ;PSI/DP .981E-6 (0) (-.00791) (.0644) (.0798) (.417) (.435) (1.17) (4.01) (5.75) <-.217E-7>
PSI/VG ;PHI/DA ;THE/DB .00112 (0) (.00730) (.0644) (.0699) (.541) (.588) (.920) (2.59) (5.75) <.140E-6>

PHI/WG ;THE/DB ;PSI/DP .00105 (0) (-.00121) (.0699) (.0776) (.0798) (.370) (1.00) (2.59) (4.01) <-.558E-8>
THE/WG ;PHI/DA ;PSI/DP -.00148 (0) (.0192) (.0644) (.0785) (.0798) (.417) (.435) (4.01) (5.75) <-.484E-7>
PSI/WG ;PHI/DA ;THE/DB -.000729 (0) (.00185) (.0644) (.0699) (.0983) (.541) (.588) (2.59) (5.75) <-.248E-8>

TABLE IV-5 CONTINUED
AH-1G TRANSFER FUNCTION FACTORS
CASE 63 60KT SCAS ON

GUST NUMERATORS CONCLUDED:

PHI/VG ;THE/DB ;PSI/DP .203 (.2823) (.3699) (.3763) (.3794) (.378) (.910) (1.00) (2.59) (4.01) <.1868-5>
THE/VG ;PHI/DA ;PSI/DP .0833 (.0843) (.0844) (.0764) (.0794) (.417) (.435) (.865) (4.01) (5.75) <.457E-6>
PSI/VG ;PHI/DA ;THE/DB -.0160 (.0160) (.0744) (.0699) (.0767) (.541) (.588) (.987) (2.59) (5.75) <-.1198-6>

PHI/UG ;THE/DB ;PSI/DP .0941 (.10337) (.0699) (.0763) (.0794) (.378) (.836) (1.03) (2.59) (4.01) <.413E-6>
THE/UG ;PHI/DA ;PSI/DP -.151 (.0105) (.0644) (.0764) (.0794) (.417) (.435) (.829) (4.01) (5.75) <-.214E-5>
PSI/UG ;PHI/DA ;THE/DB .0230 (.0114) (.0644) (.0699) (.0741) (.541) (.588) (1.17) (2.59) (5.75) <.478E-6>

PHI/BG ;THE/DB ;PSI/DP .0493 (.05566) (.0699) (.0759) (.0794) (.378) (.906) (1.00) (2.59) (4.01) <.427E-6>
THE/BG ;PHI/DA ;PSI/DP .00491 (-.0192) (.0644) (.0794) (.0819) (.417) (.435) (.871) (4.01) (5.75) <-.1092-6>
PSI/BG ;PHI/DA ;THE/DB -.0696 (.00645) (.0644) (.0699) (.0740) (.541) (.588) (.921) (2.59) (5.75) <-.652E-6>

ZD/UG ;PHI/DA ;THE/DB -.000581 (0) (.0644) (.0699) (.0699) (2.59) (5.75) [.640;.276][.615;2.68]<-.173E-4>
ZD/UG ;PHI/DA ;PSI/DP -.0106 (.0644) (.0764) (.0794) (.277) (4.01) (5.75) [.980;.420][.300;1.77]<-.461E-4>
ZD/UG ;THE/DB ;PSI/DP .00111 (.0699) (.0794) (-.134) (.808) (2.59) (4.01) [.783;.140][.782;3.45]<-.128E-5>

ZD/UG ;PHI/DA ;THE/DB -.00272 (0) (0) (.0644) (.0699) (2.59) (5.75) [.658;.287][.648;2.75]<-.000113>
ZD/UG ;PHI/DA ;PSI/DP -.0342 (0) (.0644) (.0764) (.0794) (4.01) (5.75) [.957;.409][.510;1.68]<-.000145>
ZD/UG ;THE/DB ;PSI/DP .00526 (0) (.0699) (.0794) (-.144) (2.59) (4.01) [.781;.170][.813;3.49]<-.154E-4>

YD/VG ;PHI/DA ;THE/DB -.00712 (0) (.00658) (.0644) (.0699) (.0753) (.892) (2.59) (5.75) [.669;2.29]<-.111E-5>
YD/VG ;PHI/DA ;PSI/DP -.0361 (.0644) (.0794) (.259) (.673) (1.20) (2.55) (4.01) (5.75) [-.0297;.142]<-.461E-4>
YD/VG ;THE/DB ;PSI/DP .0112 (.0164) (.0699) (.0794) (-.105) (.107) (.898) (2.59) (4.01) [.800;3.47]<-.128E-5>

XD/WG ;PHI/DA ;THE/DP -.00148 (0) (0) (.0644) (.0699) (2.59) (5.75) [.637;.276][.615;2.68]<-.583E-4>
XD/WG ;PHI/DA ;PSI/DP -.0221 (0) (.0644) (.0778) (.0794) (.337) (.557) (2.01) (4.01) (5.75) <.770E-4>
XD/WG ;THE/DB ;PSI/DP .00284 (0) (.0699) (.0794) (-.0938) (2.59) (4.01) [.787;.132][.785;3.45]<-.317E-5>

ZD/WG ;PHI/DA ;THE/DB -.0686 (0) (.00727) (.0644) (.0699) (2.59) (5.75) [.637;.268][.628;2.69]<-.173E-4>
ZD/WG ;PHI/DA ;PSI/DP -.394 (.0744) (.0794) (.0794) (.252) (.764) (1.01) (4.01) (5.75) [-.0866;.149]<-.461E-4>
ZD/WG ;THE/DB ;PSI/DP .133 (.0166) (-.0696) (.0699) (.0794) (2.59) (4.01) [.811;.110][.793;3.46]<-.128E-5>

XD/DG ; ZD/DC ;PHI/DA -.163 (0) (.0644) (5.75) [.630;.266][.976;.417][.329;1.78][.598;2.65]<-.0166>
XD/DG ; ZD/DC ;THE/DB .0180 (0) (.0699) (2.59) [.573;.0307][.669;.276][.606;2.73][.775;3.34]<. 198E-4>
XD/DG ; ZD/DC ;PSI/DP .314 (-.0661) (.0794) (4.01) [.818;.105][.976;.417][.332;1.76][.786;3.42]<-.000457>

YD/VG ; ZD/DC ;PHI/DA -.677 (0) (.0595) (.0644) (.201) (.860) (2.59) (5.75) [.518;.179][.665;2.26]<-.00108>
YD/VG ; ZD/DC ;THE/DB .230 (0) (.00328) (.0699) (.112) (2.59) [.241;.146][.738;2.27][.659;3.38]<. 198E-4>
YD/VG ; ZD/DC ;PSI/DP 1.09 (-.0602) (.0794) (.130) (.188) (.862) (2.59) (4.01) [.416;.106][.901;3.41]<-.000457>

XD/UG ;PHI/DA ;THE/DB ;PSI/DP .000556 (.0644) (.0699) (.0766) (.0794) (.808) (2.59) (4.01) (5.75) <.734E-6>
ZD/UG ;PHI/DA ;THE/DB ;PSI/DP .00260 (0) (.0644) (.0699) (.0772) (.0794) (2.59) (4.01) (5.75) <.829E-5>
YD/VG ;PHI/DA ;THE/DB ;PSI/DP .00565 (.00682) (.0644) (.0699) (.0794) (.893) (2.59) (4.01) (5.75) <.734E-6>

XD/WG ;PHI/DA ;THE/DB ;PSI/DP .00182 (0) (.0644) (.0699) (.0786) (.0794) (2.59) (4.01) (5.75) <.225E-5>
ZD/WG ;PHI/DA ;THE/DB ;PSI/DP .0660 (.00683) (.0644) (.0699) (.0763) (.0794) (2.59) (4.01) (5.75) <.734E-6>
XD/UG ; ZD/DC ;PHI/DA ;THE/DB .00880 (0) (.0644) (.0699) (2.59) (5.75) [.639;.275][.611;2.67]<.000319>

YD/VG ; ZD/DC ;PHI/DA ;THE/DB .102 (0) (.00783) (.0644) (.0699) (.0724) (2.59) (5.75) [.665;2.29]<.203E-4>
YD/VG ; ZD/DC ;PHI/DA ;PSI/DP .544 (.0644) (.0794) (.197) (.861) (2.51) (4.01) (5.75) [.502;.169]<.000778>
XD/WG ; ZD/DC ;PHI/DA ;THE/DB .0122 (0) (.0644) (.0693) (2.59) (5.75) [.641;.283][.603;2.68]<.00124>

XD/UG ; ZD/DC ;PHI/DA ;THE/DB ;PSI/DP -.00982 (.0644) (.0699) (.0770) (.0794) (2.59) (4.01) (5.75) <-.138E-4>
YD/VG ; ZD/DC ;PHI/DA ;THE/DB ;PSI/DP -.0414 (.00796) (.0744) (.0699) (.0794) (2.59) (4.01) (5.75) <-.138E-4>
XD/WG ; ZD/DC ;PHI/DA ;THE/DB ;PSI/DP -.0106 (.0644) (.0699) (.0752) (.0794) (2.59) (4.01) (5.75) <-.892E-4>

TABLE IV-5 CONTINUED
AH-IG TRANSFER FUNCTION FACTORS

CASE 64 80KT SCAS OFF

DENOMINATOR: (0) (.0506) (1.43)[.00550;.238][.594;1.00][.365;1.43]<.00851>

CONTROL NUMERATORS:

PHI/DA .490 (0)[-.0366;.281][.714;.968][.395;1.45]<.0762>
THE/DB -.161 (0) (.00864) (.0485)[.999;1.15][.361;1.44]<-.000187>
PSI/DP -1.02 (-.161) (.295) (1.46)[.0104;.255][.578;.995]<.00452>

PHI/DB .0471 (0) (-.186) (.186)[.303;1.45][.678;2.62]<-.0237>
THE/DA .0780 (0) (-.0285) (.0403) (1.02)[.394;1.42]<-.000183>

PHI/DA ;THE/DB -.0788 (0) (.0122) (1.06)[.398;1.47]<-.00218>
PHI/DA ;PSI/DP -.508 (.0998)[-.0348;.281][.704;.949]<-.00359>
THE/DB ;PSI/DP .164 (.0159) (-.159) (.322)[.999;1.12]<-.000168>

PHI/DB ;PSI/DP -.0665 (.0977) (.198) (-.201)[.483;2.29]<.00135>
PHI/DP ;THE/DB -.0625 (0) (.0154) (1.14)[.563;.838]<-.000774>
PHI/DC ;THE/DB -.00602 (0) (.00772) (3.31)[.479;2.09]<-.000670>

THE/DA ;PSI/DP -.0788 (-.0814) (1.02)[.554;.135]<.000119>
THE/DP ;PHI/DA .00635 (0) (-1.07) (1.44)[-.274;.223]<-.000489>
THE/DC ;PHI/DA .0114 (0) (.0242) (4.09)[.449;1.49]<.00251>

PSI/DA ;THE/DB -.00357 (.0122) (1.02) (-1.45) (1.65) (-4.68)<-.000496>
PSI/DB ;PHI/DA .0225 (.0899) (.295) (-.344)[-.116;2.01]<-.000825>
XD/DB ;PHI/DA .541 (0) (.995)[.397;1.47][.0217;2.22]<5.76>

YD/DA ;THE/DB -.137 (.0122) (1.06)[.320;1.41][.0313;4.36]<-.0670>
ZD/DB ;PHI/DA 2.09 (0) (.0172)[.405;1.48][.0990;2.29]<.414>
XD/DC ;PHI/DA .0446 (0) (-4.71)[.464;1.57][.488;2.54]<-3.33>

YD/DP ;THE/DB -.294 (.0159) (1.15)[-.839;1.11][.746;1.84]<-.0226>
ZD/DC ;PHI/DA -8.06 (0) (.110)[.142;.923][.424;1.40]<-1.49>

PHI/DA ;THE/DB ;PSI/DP .0815 (.0115) (.0997) (1.04)<.975E-4>
PHI/DC ;THE/DB ;PSI/DP .0225 (.00803) (.101) (2.27)<.413E-4>
THE/DC ;PHI/DA ;PSI/DP -.0134 (.0212) (.100) (3.69)<-.000105>

PSI/DC ;PHI/DA ;THE/DB -.0205 (.00861) (.108) (1.68)<-.319E-4>
XD/DB ;PHI/DA ;PSI/DP -.559 (.0997) (.992)[.0210;2.22]<-.272>
YD/DA ;THE/DB ;PSI/DP .146 (.0115) (1.04)[-.00678;4.28]<.0319>

ZD/DC ;PHI/DA ;THE/DB 1.25 (0) (.0114)[.401;1.43]<.0290>
ZD/DC ;PHI/DA ;PSI/DP 8.39 (.101) (.113)[.160;.876]<.0735>
XD/DC ;PHI/DA ;THE/DB -.0197 (0) (1.83)[.341;1.62]<-.0943>

XD/DC ;PHI/DA ;PSI/DP -.0327 (.0998) (-5.70)[.561;2.92]<.159>
YD/DP ;PHI/DA ;THE/DB -.0907 (.0115) (1.04) (1.38) (-3.59)<.0132>
ZD/DB ;PHI/DA ;PSI/DP -2.17 (.0182) (.0997)[.0970;2.30]<-.0208>

ZD/DC ;PHI/DA ;THE/DB ;PSI/DP -1.29 (.0107) (.100)<-.00138>
XD/DC ;PHI/DA ;THE/DB ;PSI/DP .0200 (.0978) (1.87)<.00365>

TABLE IV-5 CONTINUED
AH-IG TRANSFER FUNCTION FACTORS

CASE 64 80KT SCAS ON

DENOMINATOR: (0) (.262) (.668) (1.69) (2.41)[.549;.0301](.0291;.137](.698;.297](.631;2.86](.771;3.31]<.968E-4>

CONTROL NUMERATORS:

PHI/DA .690 (0) (.0644) (.262) (.668) (1.73) (2.33) (5.75)[.00117;.134](.689;.297](.630;2.82]<.00167>
THE/DB -.161 (0) (.00535) (.0644) (1.38) (2.59)[.0832;.0763](.689;.298](.628;2.82](.771;3.32]<-.175E-5>
PSI/DP -1.02 (.0794) (-.0962) (.262) (.668) (1.78) (2.36) (4.01)[.0191;.137](.616;.143](.788;3.40]<.965E-4>

PHI/DB .0471 (0) (.0699) (.186) (-.189) (.373) (1.04) (2.59)[.698;.294](.652;2.10](.772;3.48]<-.000523>
THE/DA .0788 (0) (-.0133) (.00629) (.0644) (1.02) (5.75)[.529;.304](.999;.630](.623;2.76]<-.325E-5>

PHI/DA ;THE/DB -.0788 (0) (.0122) (.0644) (.0699) (1.04) (2.59) (5.75)[.692;.297](.630;2.88]<-.678E-4>
PHI/DA ;PSI/DP -.508 (.0644) (.0794) (.0997) (.262) (.668) (1.77) (2.19) (4.01) (5.75)[.00166;.138]<-.767E-4>
THE/DB ;PSI/DP .164 (.0159) (.0699) (.0794) (-.0998) (1.04) (2.59) (4.01)[.614;.142](.781;3.48]<-.358E-5>

PHI/DB ;PSI/DP -.0665 (.0699) (.0794) (.0977) (.194) (-.201) (.378) (1.03) (2.59) (4.01)[.681;2.29]<.288E-4>
PSI/DP ;THE/DB -.3625 (0) (.0154) (.0699) (.0794) (1.04) (2.59) (4.01)[.757;.378](.712;1.58]<-.165E-4>
PHI/DC ;THE/DB -.00602 (0) (.00773) (.0699) (.364) (1.03) (2.59) (3.56)[.672;.292](.988;3.95]<-.148E-4>

THE/DA ;PSI/DP -.0788 (.0644) (.0794) (-.0814) (.417) (.935) (1.02) (4.01) (5.75)[.558;.135]<.255E-5>
THE/DP ;PHI/DA .00615 (0) (.0644) (.0794) (.351) (.599) (1.28) (4.01) (-4.04) (5.75)[.0374;.126]<-.109E-4>
THE/DC ;PHI/DA .0114 (0) (.0241) (.0644) (.429) (.428) (4.55) (5.75)[.686;.292](.710;2.77]<.550E-4>

PSI/DA ;THE/DB -.00357 (.0122) (.0644) (.0699) (.541) (.598) (1.02) (-1.95) (1.65) (2.59) (-4.68) (5.75)<-.106E-4>
PSI/DB ;PHI/DA .0225 (.0644) (.0699) (.0794) (.325) (-.335) (.411) (.676) (2.59) (5.75)[-.0825;2.07]<-.176E-4>
ID/DB ;PHI/DA .541 (0) (.0644) (.0699) (.992) (2.59) (5.75)[.684;.297](.0211;2.22](.628;2.86]<.127>

YD/DA ;THE/DB -.137 (.0122) (.0644) (.0699) (1.04) (2.59) (5.75)[.556;.287](.601;2.85](.0351;8.27]<-.001183>
ID/DB ;PHI/DA 2.09 (0) (.0172) (.0644) (.0699) (2.59) (5.75)[.685;.297](.0957;2.29](.633;2.86]<.00912>
ID/DC ;PHI/DA .0466 (0) (.0644) (.365) (.530) (-1.75) (5.75)[.686;.297](.774;3.06](.600;4.10]<-.0734>

YD/DP ;THE/DB -.294 (.0160) (.0699) (.0794) (.128) (-.199) (1.01) (2.28) (-2.29) (2.59) (4.01)[.595;3.61]<-.000483>
ID/DC ;PHI/DA -8.06 (0) (.0644) (.151) (.914) (2.59) (5.75)[.707;.217](.658;.290](.635;2.79]<-.0327>

PHI/DA ;THE/DB ;PSI/DP .0815 (.0115) (.0644) (.0699) (.0794) (.0997) (1.04) (2.59) (4.01) (5.75)<.208E-5>
PHI/DC ;THE/DP ;PSI/DP .0225 (.00403) (.0699) (.0794) (.101) (.170) (1.00) (2.27) (2.59) (4.01)<.881E-4>
THE/DC ;PHI/DA ;PSI/DP -.0138 (.0212) (.0644) (.0794) (.100) (.417) (.435) (3.59) (4.01) (5.75)<-.224E-5>

PSI/DC ;PHI/DA ;THE/DB -.0205 (.00861) (.0644) (.0699) (.108) (.541) (.588) (1.68) (2.59) (5.75)<-.681E-6>
ID/DB ;PHI/DA ;PSI/DP -.559 (.0644) (.0699) (.0794) (.0997) (.992) (2.59) (4.01) (5.75)[.0210;2.22]<-.005411>
YD/DA ;THE/DB ;PSI/DP .146 (.0115) (.0644) (.0699) (.0794) (1.04) (2.59) (4.01) (5.75)[-.00678;8.28]<.000680>

ID/DC ;PHI/DA ;THE/DB 1.25 (0) (.0114) (.0699) (.0699) (2.59) (5.75)[.679;.289](.629;2.82]<.000636>
ID/DC ;PHI/DA ;PSI/DP 8.39 (.0644) (.0794) (.101) (.157) (.915) (2.50) (4.01) (5.75)[.662;.210]<.001157>
ID/DC ;PHI/DA ;THE/DB -.0197 (0) (.0644) (.0699) (1.85) (2.59) (5.75)[.696;.319](.593;2.88]<-.00206>

ID/DC ;PHI/DA ;PSI/DP -.0327 (.0644) (.0794) (.0994) (.348) (.530) (-1.76) (4.01) (5.75)[.928;5.21]<.001138>
YD/DP ;PHI/DA ;THE/DB -.0907 (.0115) (.0644) (.0699) (.0794) (1.04) (2.59) (3.38) (-3.59) (4.01) (5.75)<.0002281>
ID/DB ;PHI/DA ;PSI/DP -2.17 (.0182) (.0644) (.0699) (.0794) (.0999) (2.59) (4.01) (5.75)[.0970;2.30]<-.000445>

ID/DC ;PHI/DA ;THE/DB ;PSI/DP -1.29 (.0107) (.0644) (.0699) (.0794) (.100) (2.59) (4.01) (5.75)<-.295E-6>
ID/DC ;PHI/DA ;THE/DB ;PSI/DP .0200 (.0644) (.0699) (.0794) (.0978) (1.87) (2.59) (4.01) (5.75)<.779E-6>

MICROFILMED FROM
BEST AVAILABLE COPY

TABLE IV-5 CONTINUED
AH-IG TRANSFER FUNCTION FACTORS

CASE 65 100KT SCAS OFF

DENOMINATOR: (0) (.0417) (1.35) [.0567; .220][.505; 1.21][.378; 1.60]<.0101>

CONTROL NUMERATORS:

PHI/DA .484 (0) [.0320; .259][.611; 1.18][.401; 1.63]<.118>
THE/DB -.163 (0) (.0152) (.0410) [.993; 1.16][.375; 1.61]<-.000357>
PSI/DP -1.07 (-.190) (.384) (1.36) [.0630; .233][.484; 1.18]<.00812>

PHI/DB .0638 (0) (-.115) (.138) [.337; 1.66][.578; 2.76]<-.0202>
THE/DA .0797 (0) (-.0348) (.0382) (1.14) [.412; 1.58]<-.000300>

PHI/DA ;THE/DB -.0790 (0) (.0184) (1.21) [.399; 1.65]<-.00478>
PHI/DA ;PSI/DP -.531 (.122) [.0305; .261][.607; 1 14]<-.00576>
THE/DB ;PSI/DP .175 (.020[) (-.191) (.463) [.996 1.08]<-.000365>

PHI/DB ;PSI/DP -.0891 (.111) (-.131) (.165) [.399; 2.48]<.00132>
PHI/DP ;THE/DB -.0687 (0) (.0199) (1.34) [.480; 1.07]<-.00211>
PHI/DC ;THE/DB .00307 (0) (.0153) (-9.69) [.589; .94]<-.00171>

THE/DA ;PSI/DP -.0852 (-.147) (1.15) [.963; .122]<.000214>
THE/DP ;PHI/DA .00613 (0) (2.09) (-2.54) [.996; .104]<-.00111>
THE/DC ;PHI/DA .0584 (0) (.0304) [.464; 1.68]<.00439>

PSI/DA ;THE/DB -.00421 (.0184) (1.16) (-1.53) (1.85) (-3.39) <-.000863>
PSI/DB ;PHI/DA .0260 (.101) (-.255) (.300) [.00773; 2.05]<-.000938>
XD/DB ;PHI/DA .452 (0) (1.21) [.398; 1.66][.0151; 2.36]<8.35>

YD/DA ;THE/DB -.137 (.0184) (1.22) [.312; 1.55][.0394; 2.44]<-.146>
ZD/DB ;PHI/DA 2.71 (0) (.0333) [.405; 1.67][.0998; 2.41]<1.46>
XD/DC ;PHI/DA .203 (0) (-2.09) [.533; 1.71][.332; 2.06]<-5.25>

YD/DP ;THE/DB -.316 (.0201) (-1.02) (1.47) (-1.74) [.679; 1.93]<-.0617>
ZD/DC ;PHI/DA -8.55 (0) (.105) [.103; 1.12][.443; 1.59]<-2.84>

PHI/DA ;THE/DB ;PSI/DP .0863 (.0179) (.122) (1.19) <.000225>
PHI/DC ;THE/DB ;PSI/DP .0158 (.0155) (.124) (3.80) <.000116>
THE/DC ;PHI/DA ;PSI/DP -.00747 (.0279) (.122) (4.52) <-.000216>

PSI/DC ;PHI/DA ;THE/DB -.0220 (.0157) (.131) (1.76) <-.796E-4>
XD/DB ;PHI/DA ;PSI/DP -.493 (.122) (1.20) [.0143; 2.36]<-.404>
YD/DA ;THE/DB ;PSI/DP .155 (.0178) (1.19) [-.00371; 4.30]<.0610>

ZD/DC ;PHI/DA ;THE/DB 1.37 (0) (.0152) [.406; 1.59]<.0528>
ZD/DC ;PHI/DA ;PSI/DP 9.41 (.115) (.119) [.147; 1.05]<.141>
XD/DC ;PHI/DA ;THE/DB -.0380 (0) (1.23) [.333; 1.73]<-.141>

XD/DC ;PHI/DA ;PSI/DP -.211 (.122) (-2.12) [.462; 2.13]<.247>
YD/DP ;PHI/DA ;THE/DB -.0951 (.0179) (1.18) (4.21) (-4.48) <.0379>
ZD/DB ;PHI/DA ;PSI/DP -2.96 (.0340) (.122) [.0963; 2.42]<-.0720>

ZD/DC ;PHI/DA ;THE/DB ;PSI/DP -1.49 (.0154) (.123) <-.00280>
XD/DC ;PHI/DA ;THE/DB ;PSI/DP .0411 (.120) (1.12) <.00554>

TABLE IV-5 CONTINUED
AH-IG TRANSFER FUNCTION FACTORS

CASE 65 400KT SCAS ON

DENOMINATOR: (0) (.367) (.659)[.612;.3228]X.0526;.117]X.711;.328]X.949;2.24]X.630;3.01]X.758;3.23]<.86E-6>

CONTROL NUMERATORS:

PHI/DA .484 (0) (.0644) (.367) (.659) (5.75)[.0353;.184]X.721;.319]X.939;2.21]X.695;2.95]<.00240>
THE/DP -.161 (0) (.0103) (.2639) (1.19) (2.59)[.714;.0276]X.730;.329]X.621;1.07]X.766;3.77]<-.2756-5>
PSI/DP -1.07 (.0794) (-.139) (.267) (.659) (4.01)[.0317;.186]X.681;.160]X.946;2.24]X.771;3.83]<.000173>

PHI/DB .0698 (0) (.0699) (-.117) (.138) (.871) (1.02) (2.59)[.721;.312]X.694;2.33]X.730;3.[illegible]<-.000648>
THE/DA .0812 (0) (-.0161) (.0595) (.0644) (1.15) (5.75)[.035;.293]X.999;.933]X.631;2.68]<-.430E-5>

PHI/DA ;THE/DB -.0790 (0) (.0184) (.0644) (.0699) (1.19) (2.59) (5.75)[.721;.319]X.933;2.98]<-.000105>
PHI/DA ;PSI/DP -.531 (.0644) (.0794) (.122) (.267) (.659) (4.01) (5.75)[.0316;.139]X.935;2.18]<-.000123>
THE/DB ;PSI/DP .175 (.0231) (.0699) (.0794) (-.139) (1.19) (2.59) (4.01)[.833;.160]X.764;3.41]<-.783E-5>

PHI/DB ;PSI/DP -.0891 (.0699) (.0794) (.111) (-.131) (.165) (.3768 (1.00) (2.59) (4.01)[.139;2.48]<.282E-4>
PHI/DP ;THE/DB -.0687 (0) (.0199) (.0699) (.0794) (1.21) (2.59) (4.01)[.825;.492]X.665;1.71]<-.651E-4>
PHI/DC ;THE/DB -.0528 (0) (.0153) (.0699) (.363) (1.02) (2.59)[.705;.305]X.817;2.74]<-.380E-4>

THE/DA ;PSI/DP -.0852 (.0644) (.0794) (-.147) (.417) (.635) (1.15) (4.01) (5.75)[.963;.122]<.456E-5>
THE/DP ;PHI/DA .00611 (0) (.0644) (.0794) (.236) (.420) (1.65) (4.01) (5.75) (-6.12)[.929;.153]<-.249E-6>
THE/DC ;PHI/DA .0836 (0) (.0303) (.0644) (.426) (.428) (5.75)[.727;.316]X.691;2.81]<.000135>

PSI/DA ;THE/DB -.00421 (.0184) (.0644) (.0699) (.541) (.548) (1.16) (-1.53) (1.65) (2.59) (-3.39) (5.75)<-.184E-6>
PSI/DB ;PHI/DA .0260 (.0644) (.0699) (.101) (-.249) (.709) (2.59) (5.75)[.993;.358]X.0301;2.12]<-.179E-6>
ID/DB ;PHI/DA .452 (0) (.0644) (.0699) (1.20) (2.59) (5.75)[.722;.319]X.0147;2.36]X.639;2.98]<.184>

YD/DA ;THE/DB -.137 (.0184) (.0644) (.0699) (1.20) (2.59) (5.75)[.590;.305]X.594;2.96]X.0481;6.32]<-.00311>
ZD/DB ;PHI/DA 2.71 (0) (.0333) (.0644) (.0699) (2.59) (5.75)[.723;.319]X.0963;2.41]X.635;3.00]<.0121>
ID/DC ;PHI/DA .203 (0) (.0644) (.356) (.509) (-1.09) (5.75)[.727;.321]X.748;2.71]X.523;3.21]<-.116>

YD/DP ;THE/DB -.316 (.0201) (.0699) (.0794) (.135) (-.209) (1.19) (2.59) (2.68) (-2.99) (4.01)[.616;3.67]<-.00132>
ID/DC ;PHI/DA -8.55 (0) (.0644) (.126) (.996) (2.55) (5.75)[.799;.268]X.648;.318]X.642;2.91]<-.0625>

PHI/DA ;THE/DB ;PSI/DP .0863 (.0179) (.0644) (.0699) (.0794) (.122) (1.19) (2.59) (4.01) (5.75)<.8798-5>
PHI/DC ;THE/DB ;PSI/DP .0158 (.0155) (.0699) (.0794) (.124) (.370) (1.00) (2.59) (3.80) (4.01)<.2478-5>
THE/DC ;PHI/DA ;PSI/DP -.00747 (.0279) (.0644) (.0794) (.122) (.417) (.635) (4.01) (5.75) (8.52)<-.4628-5>

PSI/DC ;PHI/DA ;THE/DB -.0220 (.0157) (.0644) (.0699) (.131) (.541) (.588) (1.76) (2.59) (5.75)<-.1708-5>
ID/DB ;PHI/DA ;PSI/DP -.493 (.0644) (.0699) (.0794) (.122) (1.20) (2.59) (4.01) (5.75)[.0143;2.36]<-.00862>
YD/DA ;THE/DB ;PSI/DP .155 (.0178) (.0644) (.0699) (.0794) (1.19) (2.59) (4.01) (5.75)[-.00371;8.30]<.00130>

ZD/DC ;PHI/DA ;THE/DB 1.17 (0) (.0152) (.0644) (.0699) (2.59) (5.75)[.717;.309]X.634;2.95]<.00116>
ZD/DC ;PHI/DA ;PSI/DP 9.41 (.0644) (.0794) (.127) (.133) (.995) (2.45) (4.01) (5.75)[.722;.257]<.00102>
ID/DC ;PHI/DA ;THE/DB -.0380 (0) (.0644) (.0699) (1.14) (2.59) (5.75)[.729;.305]X.609;2.98]<-.00307>

ID/DC ;PHI/DA ;PSI/DP -.211 (.0644) (.0799) (.122) (.357) (.509) (-1.07) (4.01) (5.75)[.705;2.99]<.00527>
YD/DP ;PHI/DA ;THE/DB -.0951 (.0179) (.0644) (.0699) (.0794) (1.19) (2.59) (4.01) (4.21) (-8.48) (5.75)<.000408>
ZD/DB ;PHI/DA ;PSI/DP -2.94 (.0383) (.0644) (.0699) (.0794) (.122) (2.59) (4.01) (5.75)[.0963;2.42]<-.01154>

ID/DC ;PHI/DA ;THE/DB ;PSI/DP -1.99 (.0158) (.0644) (.0699) (.0794) (.123) (2.59) (4.01) (5.75)<-.5988-6>
ID/DC ;PHI/DA ;THE/DB ;PSI/DP .0413 (.0644) (.0699) (.0794) (.120) (1.12) (2.59) (4.01) (5.75)<.000118>

TABLE IV-5 CONTINUED
AH-1G TRANSFER FUNCTION FACTORS

CASE 66 120KT SCAS OFF

DENOMINATOR: (0) (.0461) (1.17)[.0699;.196][.472;1.45][.378;1.69]<.0125>

CONTROL NUMERATORS:

PHI/DA .491 (0)[.0792;.228][.518;1.43][.429;1.76]<.160>
THE/DB -.175 (0) (.0249) (.0454) (.917) (1.36)[.394;1.72]<-.000735>
PSI/DP -1.12 (-.181) (.455) (1.13)[.0994;.201][.429;1.40]<.00831>

PHI/DB .0944 (0) (-.0440) (.0859)[.407;1.80][.409;2.79]<-.00902>
THE/DA .0710 (0) (.0400) (-.0669) (1.34)[.473;1.62]<-.000672>

PHI/DA ;THE/DB -.0860 (0) (.0266) (1.37)[.425;1.77]<-.00089>
PHI/DA ;PSI/DP -.564 (.143)[.0765;.231][.522;1.40]<-.00638>
THE/DB ;PSI/DP .196 (.0274) (-.178) (1.36)[.966;.643]<-.000537>

PHI/DB ;PSI/DP -.122 (-.0636) (.0949) (.156)[.371;2.69]<.000830>
PHI/DP ;THE/DB -.0797 (0) (.0273) (1.65)[.445;1.04]<-.00385>
PHI/DC ;THE/DB .0166 (0) (.0256) (-2.94)[.639;1.82]<-.00415>

THE/DA ;PSI/DP -.0778 (.0639) (-.225) (.254) (1.37)<.000389>
THE/DP ;PHI/DA .00997 (0) (.0685) (.468) (-2.49) (2.99)<-.00238>
THE/DC ;PHI/DA .0752 (0) (.0174)[.530;1.79]<.00904>

PSI/DA ;THE/DB -.00502 (.0267) (-1.04) (1.36) (1.64) (-8.74)<-.00147>
PSI/DB ;PHI/DA .0150 (.111) (-.285) (.442)[.188;2.13]<-.000952>
XD/DB ;PHI/DA .330 (0) (1.68)[.424;1.78][-.00639;2.61]<11.9>

YD/DA ;THE/DB -.149 (.0267) (1.37)[.301;1.63][.0598;8.53]<-.299>
ZD/DB ;PHI/DA 3.41 (0) (.0462)[.427;1.78][.0957;2.63]<3.46>
XD/DC ;PHI/DA .476 (0) (-1.33)[.552;1.70][.253;2.04]<-7.63>

YD/DP ;THE/DB -.356 (.0274) (-.633) (-2.80) (2.86)[.909;1.49]<-.109>
ZD/DC ;PHI/DA -9.17 (0) (.100)[.0461;1.32][.496;1.73]<-8.77>

PHI/DA ;THE/DB ;PSI/DP .0986 (.0262) (.143) (1.36)<.000503>
PHI/DC ;THE/DP ;PSI/DP .0106 (.0252) (.145) (7.29)<.000283>
THE/DC ;PHI/DA ;PSI/DP -.0822 (.0353) (.143)<-.000416>

PSI/DC ;PHI/DA ;THE/DB -.0319 (.0246) (.152) (1.53)<-.000184>
XD/DB ;PHI/DA ;PSI/DP -.378 (.144) (1.66)[-.00571;3.60]<-.616>
YD/DA ;THE/DB ;PSI/DP .177 (.0261) (1.36)[-.00621;4.36]<.119>

ZD/DC ;PHI/DA ;THE/DB 1.65 (0) (.0213)[.437;1.67]<.0987>
ZD/DC ;PHI/DA ;PSI/DP 10.6 (.110) (.143)[.139;1.23]<.251>
XD/DC ;PHI/DA ;THE/DB -.0793 (0) (.815)[.357;1.77]<-.202>

XD/DC ;PHI/DA ;PSI/DP -.527 (.141) (-1.30)[.376;1.94]<.171>
YD/DP ;PHI/DA ;THE/DB -.107 (.0242) (1.34) (5.07) (-5.37)<.102>
ZD/DB ;PHI/DA ;PSI/DP -3.91 (.0468) (.144)[.0931;2.62]<-.182>

ZD/DC ;PHI/DA ;THE/DB ;PSI/DP -1.87 (.0223) (.144)<-.00604>
XD/DC ;PHI/DA ;THE/DB ;PSI/DP .0498 (.141) (.659)<.00833>

TABLE IV-5 CONTINUED
AH-IG TRANSFER FUNCTION FACTORS

CASE 66 120KT SCAS ON

ENOMINATOR: (0) (.270) (.650)[.511;.0216][.0854;.110][.755;.331][.493;2.59][.757;1.10][.621;1.21]<.000146>

ONTROL NUMERATORS:

PHI/DA .491 (0) (.0644) (.270) (.651) (5.75)[.0756;.111][.759;.330][.690;2.50][.649;3.08]<.00352>
THE/DB -.175 (0) (.0251) (.0699) (1.36) (2.59)[.584;.0259][.755;.331][.754;3.19][.620;3.25]<-.851E-5>
PSI/DP -1.12 (.0794) (-.0973) (.270) (.650) (4.01)[.0950;.124][.062;.157][.692;2.57][.749;3.10]<.000177>

PHI/DB .0944 (0) (-.0452) (.0699) (.0459) (.373) (1.00) (2.59)[.752;.129][.183;2.65][.652;3.29]<-.000203>
THE/DA .0736 (0) (-.0352) (.0590) (.0644) (1.36) (5.75)[.737;.255][.998;.438][.649;2.90]<-.822E-5>

PHI/DA ;THE/DB -.0860 (0) (.0266) (.0644) (.0699) (1.36) (2.59) (5.75)[.750;.329][.646;3.10]<-.000218>
PHI/DA ;PSI/DP -.564 (.0444) (.0794) (.149) (.270) (.651) (4.31) (5.75)[.0727;.132][.880;2.48]<-.000179>
THE/DB ;PSI/DP .196 (.0274) (.0699) (.0794) (-.0463) (1.36) (2.59) (4.01)[.667;.156][.765;3.40]<-.115E-4>

PHI/DB ;PSI/DP -.122 (-.0630) (.0699) (.0794) (.0944) (.356) (.370) (1.00) (2.59) (4.01)[.371;2.69]<.177E-4>
PHI/DP ;THE/DB -.0797 (0) (.0273) (.0699) (.0794) (1.45) (2.59) (4.01)[.811;.382][.678;1.76]<-.622E-4>
PHI/DC ;THE/DB .0166 (0) (.0256) (.0699) (.363) (1.03) (2.59) (-4.30)[.741;.321][.777;2.68]<-.924E-4>

THE/DA ;PSI/DP -.0778 (.0639) (.0644) (.0794) (-.225) (.258) (.417) (.435) (1.37) (4.01) (5.75)<.829E-5>
THE/DP ;PHI/DA .00437 (0) (.0663) (.0644) (.0794) (.643) (2.21) (4.01) (-5.46) (5.75)[.936;.305]<-.566E-4>
THE/DC ;PHI/DA .0911 (0) (.0373) (.0644) (5.75)[.759;.329][1.00;.426][.696;2.84]<.000200>

PSI/DA ;THE/DB -.00502 (.0267) (.0644) (.0699) (.541) (.588) (-1.04) (1.36) (1.64) (2.59) (-4.74) (5.75)<-.314E-4>
PSI/DB ;PHI/DA .0150 (.0644) (.0699) (.111) (-.269) (.844) (2.59) (5.75)[.924;.393][.224;2.34]<-.203E-4>
ZD/DB ;PHI/DA .330 (0) (.0644) (.0699) (1.64) (2.59) (5.75)[.751;.329][-.00579;2.61][.644;3.10]<.262>

YD/DA ;THE/DB -.149 (.0267) (.0644) (.0699) (1.36) (2.59) (5.75)[.590;.311][.587;3.09][.0685;4.38]<-.00617>
ZD/DB ;PHI/DA 3.41 (0) (.0462) (.0644) (.0699) (2.59) (5.75)[.752;.329][.0944;2.62][.646;3.11]<.0763>
ZD/DC ;PHI/DA .476 (0) (.0644) (.363) (.480) (-.757) (5.75)[.750;.335][.770;2.57][.567;3.09]<-.170>

YD/DP ;THE/DB -.356 (.0274) (.0699) (.0794) (.119) (-.163) (1.33) (2.59) (3.17) (-3.70) (4.01)[.627;3.69]<-.00232>
ZD/DC ;PHI/DA -9.17 (0) (.0644) (.112) (1.06) (2.82) (5.75)[.854;.294][.650;.348][.664;2.98]<-.105>

PHI/DA ;THE/DB ;PSI/DP .0986 (.0262) (.0644) (.0699) (.0794) (.143) (1.36) (2.59) (4.01) (5.75)<.107E-4>
PHI/DC ;THE/DB ;PSI/DP .0106 (.0252) (.0699) (.0794) (.145) (.370) (1.00) (2.59) (4.01) (7.29)<.603E-5>
THE/DC ;PHI/DA ;PSI/DP -.0822 (.0357) (.0644) (.0794) (.143) (.417) (.435) (4.01) (5.75)<-.887E-5>

PSI/DC ;PHI/DA ;THE/DB -.0319 (.0246) (.0644) (.0699) (.152) (.541) (.588) (1.53) (2.59) (5.75)<-.392E-5>
ZD/DB ;PHI/DA ;PSI/DP -.378 (.0644) (.0699) (.0794) (.144) (1.68) (2.59) (4.01) (5.75)[-.00571;2.60]<-.0111>
YD/DA ;THE/DB ;PSI/DP .177 (.0261) (.0644) (.0699) (.0794) (1.36) (2.59) (4.01) (5.75)[-.00621;4.36]<.00255>

ZD/DC ;PHI/DA ;THE/DB 1.65 (0) (.0214) (.0644) (.0699) (2.59) (5.75)[.745;.116][.650;3.05]<.00219>
ZD/DC ;PHI/DA ;PSI/DP 10.6 (.0644) (.0794) (.133) (.139) (1.05) (2.69) (4.01) (5.75)[.764;.289]<.00535>
ZD/DC ;PHI/DA ;THE/DB -.0793 (0) (.0644) (.0699) (.662) (2.59) (5.75)[.739;.366][.627;3.06]<-.00441>

ZD/DC ;PHI/DA ;PSI/DP -.527 (.0644) (.0798) (.143) (.370) (.480) (-.739) (4.01) (5.75)[.721;2.62]<.00791>
YD/DP ;PHI/DA ;THE/DB -.107 (.0262) (.0644) (.0699) (.0794) (1.36) (2.59) (4.01) (5.07) (-5.37) (5.75)<.00217>
ZD/DB ;PHI/DA ;PSI/DP -1.91 (.0464) (.0644) (.0699) (.0794) (.144) (2.59) (4.01) (5.75)[.0931;2.62]<-.00387>

ZD/DC ;PHI/DA ;THE/DB ;PSI/DP -1.87 (.0223) (.0644) (.0699) (.0794) (.144) (2.59) (4.01) (5.75)<-.000129>
ZD/DC ;PHI/DA ;THE/DB ;PSI/DP .0898 (.0644) (.0699) (.0794) (.141) (.459) (2.59) (4.01) (5.75)<.000178>

TABLE IV-5 CONTINUED
AH-1G TRANSFER FUNCTION FACTORS

CASE 67 140KT SCAS OFF

DENOMINATOR: (0) (.0924) (.848) [.0391;.183][.515;1.54][.346;1.91]<.0229>

CONTROL NUMERATORS:

PHI/DA .503 (0)[.106;.210][.505;1.53][.421;2.02]<.212>
THE/DB -.199 (0) (.0385) (.102) (.590) (1.50)[.431;1.81]<-.00227>
PSI/DP -1.15 (-.0854) (.385) (.806)[.112;.155][.405;1.64]<.00198>

PHI/DB .132 (0)[.541;.0518][.544;1.75][.295;3.06]<.0102>
THE/DA .0603 (0) (.0473) (-.129) (1.81)[.577;1.50]<-.00151>

PHI/DA ;THE/DB -.0998 (0) (.0381) (1.44)[.473;1.93]<-.0204>
PHI/DA ;PSI/DP -.592 (.163)[.107;.210][.459;1.67]<-.0118>
THE/DB ;PSI/DP .232 (.0364) (-.0616) (1.57)[.956;.441]<-.000159>

PHI/DB ;PSI/DP -.131 (.165)[.577;.0467][.420;3.09]<-.000453>
PHI/DP ;THE/DB -.0969 (0) (.0367) (2.10)[.621;.548]<-.00224>
PHI/DC ;THE/DB .0424 (0) (.0386) (-1.97)[.772;1.72]<-.00958>

THE/DA ;PSI/DP -.0635 (.0637) (-.305) (.321) (1.80)<.000712>
THE/DP ;PHI/DA .0179 (0) (.0665) (.507) (-2.27) (3.63)<-.00500>
THE/DC ;PHI/DA -.0226 (0) (.0483) (-4.61)[.655;1.81]<.0165>

PSI/DA ;THE/DB -.00549 (.0381) (-.728) (1.28) (1.78) (-7.43)<-.00257>
PSI/DB ;PHI/DA -.0266 (.119)[.136;.284][-.135;2.68]<-.000941>
XD/DB ;PHI/DA .136 (0) (3.73)[.490;1.88][-.0426;3.08]<17.0>

YD/DA ;THE/DB -.175 (.0381) (1.45)[.294;1.71][.0897;4.63]<-.607>
ZD/DB ;PHI/DA 4.24 (0) (.0609)[.465;1.86][.0827;2.91]<7.61>
XD/DC ;PHI/DA .898 (0) (-.935)[.580;1.70][.208;2.08]<-10.6>

YD/DP ;THE/DB -.421 (.0363) (-.161) (-3.60) (3.92)[.940;1.04]<-.0375>
ZD/DC ;PHI/DA -9.86 (0) (.104)[-.0193;1.50][.562;1.87]<-8.09>

PHI/DA ;THE/DP ;PSI/DP .119 (.0378) (.163) (1.52)<.00111>
PHI/DC ;THE/DB ;PSI/DP .0915 (.0381) (.164)<.000570>
THE/DC ;PHI/DA ;PSI/DP .0162 (.0465) (.163) (-6.48)<-.000792>

PSI/DC ;PHI/DA ;THE/DB -.0598 (.0368) (.172) (1.14)<-.000432>
XD/DB ;PHI/DA ;PSI/DP -.164 (.163) (3.65)[-.0417;3.09]<-.936>
YD/DA ;THE/DB ;PSI/DP .215 (.0377) (1.51)[-.0113;4.45]<.242>

ZD/DC ;PHI/DA ;THE/DB 2.15 (0) (.0302)[.488;1.69]<.185>
ZD/DC ;PHI/DA ;PSI/DP 11.7 (.116) (.162)[.131;1.41]<.443>
XD/DC ;PHI/DA ;THE/DB -.172 (0) (.561)[.402;1.78]<-.307>

XD/DC ;PHI/DA ;PSI/DP -1.02 (.162) (-.871)[.314;1.91]<.526>
YD/DP ;PHI/DA ;THE/DB -.126 (.0378) (1.49) (5.91) (-6.25)<.262>
ZD/DB ;PHI/DA ;PSI/DP -5.01 (.0614) (.164)[.0869;2.90]<-.422>

ZD/DC ;PHI/DA ;THE/DB ;PSI/DP -2.49 (.0326) (.164)<-.0134>
XD/DC ;PHI/DA ;THE/DB ;PSI/DP .198 (.159) (.422)<.0134>

TABLE IV-5 CONTINUED
AH-1G TRANSFER FUNCTION FACTORS

CASE 69 60KT MAX CLIMB SCAS OFF

DENOMINATOR: (0) (.437) (1.01)[-.313;.139]X[.0516;.964]X[.813;1.17]<.0159>

CONTROL NUMERATORS:

PHI/DA .603 (0)[-.0879;.168]X[.435;1.10]X[.491;1.29]<.0348>
THE/DB -.184 (0) (.0126) (.487)[-.0183;.853]X[.997;1.04]<-.000955>
PSI/DP -.901 (1.13)[.138;.0584]X[-.417;.458]X[.809;1.25]<-.00120>

PHI/DB .0880 (0) (-.357) (1.20)[.605;.664]X[.527;2.11]<-.0738>
THE/DA .0848 (0) (-.00990) (.0571) (1.32)[.397;1.04]<-.6848-4>

PHI/DA ;THE/DB -.110 (0) (.0163) (.977)[.508;1.17]<-.00239>
PHI/DA ;PSI/DP -.556 (.0655)[-.0356;.138]X[.447;1.21]<-.00102>
THE/DB ;PSI/DP .167 (.0192) (.945) (1.21)[-.935;.465]<.000794>

PHI/DB ;PSI/DP -.0643 (.0661) (-.296) (.372)[.855;2.10]<.00207>
PHI/DP ;THE/DB -.0832 (0) (.0194) (-.817) (.992) (1.62)<.00226>
PHI/DC ;THE/DB -.0163 (0) (.00285) (.942)[.675;3.81]<-.000638>

THE/DA ;PSI/DP -.0714 (.0196) (1.35)[-.347;.412]<-.000321>
THE/DP ;PHI/DA .0135 (0) (.0198) (1.72)[-.0194;1.45]<.000980>
THE/DC ;PHI/DA -.0145 (0) (.0276) (-8.15)[.526;1.03]<.00144>

PSI/DA ;THE/DB .0616 (.0164) (-.546) (.891) (1.60)<-.000789>
PSI/DB ;PHI/DA -.0221 (.0619)[.00347;.480]X[-.0649;2.32]<-.00170>
XD/DB ;PHI/DA .866 (0) (.741)[.504;1.16]X[.0463;2.34]<9.75>

YD/DA ;THE/DB -.192 (.0165) (.990)[.837;1.09]X[.0441;9.86]<-.0737>
ZD/DB ;PHI/DA 1.68 (0) (-.0162)[.485;1.14]X[.0600;2.54]<-.229>
XD/DC ;PHI/DA -.0648 (0) (6.11)[.515;1.02]X[-.500;3.19]<-4.16>

YD/DP ;THE/DP -.361 (.0191) (.993) (-.999) (1.67)[-.0363;2.55]<.0742>
ZD/DC ;PHI/DA -9.01 (0) (.0281)[.511;1.05]X[.0557;1.08]<-.330>

PHI/DA ;THE/DB ;PSI/DP .102 (.0176) (.0643) (1.03)<.000119>
PHI/DC ;THE/DB ;PSI/DP .0901 (0) (.0614) (1.17)<.00649>
THE/DC ;PHI/DA ;PSI/DP -.114 (.0236) (.0659)<-.000177>

PSI/DC ;PHI/DA ;THE/DB -.0938 (.00267) (.0699) (.755)<-.1312-4>
XD/DB ;PHI/DA ;PSI/DP -.805 (.0642) (.782)[.0469;2.34]<-.221>
YD/DA ;THE/DB ;PSI/DP .185 (.0176) (1.03)[-.0186;4.37]<.3640>

ZD/DC ;PHI/DA ;THE/DB 1.69 (0) (.0275)[.483;.992]<.0458>
ZD/DC ;PHI/DA ;PSI/DP 8.40 (.0259) (.0659)[.106;1.12]<.0181>
XD/DC ;PHI/DA ;THE/DB .0327 (0) (-4.44)[.578;1.13]<-.187>

XD/DC ;PHI/DA ;PSI/DP .112 (.0659) (3.53)[-.416;3.09]<.248>
YD/DP ;PHI/DA ;THE/DB -.124 (.0176) (1.00) (2.18) (-2.39)<.1111>
ZD/DB ;PHI/DA ;PSI/DP -1.56 (-.03217) (.0649)[.0622;2.53]<.00140>

ZD/DC ;PHI/DA ;THE/DB ;PSI/DP -1.55 (.0210) (.0660)<-.00216>
XD/DC ;PHI/DA ;THE/DB ;PSI/DP -.0234 (.0648) (-6.23)<.00984>

MICROFILMED FROM
BEST AVAILABLE COPY

TABLE IV-5 CONTINUED
AH-1G TRANSFER FUNCTION FACTORS

CASE 69 60KT MAX CLIMB SCAS ON

DENOMINATOR: (0) (.269) (.631)[-.0190; .0307][.457; .144][.196; .193][.921; 2.19][.438; 1.07][.753; 1.14]<.9259-4>

CONTROL NUMERATORS:

PHI/DA .730 (0) (.0648) (.267) (.832) (5.75)[-.0349; .0348][.641; .251][.921; 2.19][.457; 2.49]<.0507E0>
THE/DB -.184 (0) (.0199) (.0694) (1.03) (2.59)[.675; .181][.855; .265][.649; 2.97][.688; 1.20]<-.3096-4>
PSI/DP -.903 (.0794) (.173) (.265) (.631) (4.03)[.291; .0388][-.265; .201][.933; 2.23][.756; 1.64]<-.2568-4>

PHI/DB .0840 (0) (.0699) (-.339) (1.05) (2.59)[.595; .295][.656; .388][.910; 1.65][.668; 2.93]<-.00160>
THE/DA .0856 (0) (.0332) (.0644) (.0698) (1.03) (5.75)[.999; .429][-.328; .682][.619; 2.19]<.1118-4>

PHI/DA ;THE/DB -.110 (0) (.0261) (.0644) (.0699) (1.03) (2.59) (5.75)[.623; .246][.654; 2.65]<-.5258-4>
PHI/DA ;PSI/DP -.556 (.0644) (.0658) (.0794) (.259) (.631) (4.03) (5.75)[.0368; .0761][.932; 2.22]<-.2178-4>
THE/DB ;PSI/DP .167 (.0192) (.0699) (.0794) (.167) (1.03) (2.59) (4.03)[-.805; .192][.751; 1.63]<.1698-4>

PHI/TR ;PSI/DP -.0643 (.0661) (.0699) (.0794) (-.295) (.333) (.372) (1.03) (2.59) (4.03)[.855; 2.30]<.6828-4>
PHI/DP ;THE/DB -.0892 (0) (.0195) (.0699) (.0794) (.643) (.594) (-.903) (1.03) (1.64) (2.59) (4.03)<.6818-4>
PHI/DC ;THE/DB -.180 (0) (.0195) (.0699) (.172) (2.59) (4.27)[.652; .291][.999; 1.05]<-.1178-4>

THE/DA ;PSI/DP -.0714 (.0195) (.0644) (.0794) (.417) (.435) (1.35) (4.03) (5.75)[-.387; .812]<-.6888-5>
THE/DP ;PHI/DA .0136 (0) (.0199) (.0644) (.0794) (.126) (.566) (-.939) (1.37) (-2.91) (4.03) (5.75)<.1978-4>
THE/DC ;PHI/DA .180 (0) (.0273) (.0644) (5.75)[.609; .220][1.00; .427][.679; 2.18]<.7598-4>

PSI/DA ;THE/DB .0616 (.0164) (.0644) (.0699) (.541) (-.586) (.588) (.891) (1.60) (2.59) (5.75)<-.1688-4>
PSI/DB ;PHI/DA -.0221 (.0619) (.0644) (.0699) (2.59) (5.75)[.0597; .512][.978; .571][-.136; 2.18]<-.3628-4>
ID/DB ;PHI/DA .866 (0) (.0644) (.0699) (.781) (2.59) (5.75)[.623; .245][.0666; 2.36][.655; 2.64]<.104>

ID/DA ;THE/DB -.192 (.0165) (.0644) (.0699) (1.02) (2.59) (5.75)[.515; .212][.624; 2.69][.0467; 8.37]<-.00157>
ID/DB ;PHI/DA 1.48 (0) (-.0155) (.0644) (.0699) (2.59) (5.75)[.633; .251][.0624; 2.56][.653; 2.62]<-.004911>
ID/DC ;PHI/DA -1.40 (0) (.0644) (.327) (.581) (5.75)[.606; .225][-.710; 1.89][.691; 2.29]<-.0937>

YD/DP ;THE/DB -.341 (.0191) (.0699) (.0794) (1.01) (-1.61) (1.98) (2.59) (4.01)[.489; .311][.423; 3.58]<.001581>
ID/DC ;PHI/DA -9.03 (0) (.0269) (.0644) (1.03) (2.91) (5.75)[.634; .222][.818; .288][.699; 2.58]<-.00692>

PHI/DA ;THE/DB ;PSI/DP .102 (.0176) (.0643) (.0644) (.0699) (.0794) (1.03) (2.59) (4.01) (5.75)<.2548-5>
PHI/DC ;THE/DB ;PSI/DP .0902 (.00298) (.0614) (.0699) (.0794) (.370) (1.00) (1.17) (2.59) (4.01)<.4138-6>
THE/DC ;PHI/DA ;PSI/DP -.114 (.0236) (.0644) (.0659) (.0794) (.417) (.435) (4.01) (5.75)<-.3788-5>

PSI/DC ;PHI/DA ;THE/DB -.0934 (.00267) (.0644) (.0698) (.0699) (.541) (.588) (.755) (2.59) (5.75)<-.2888-6>
ID/DB ;PHI/DA ;PSI/DP -.805 (.0642) (.0644) (.0699) (.0794) (.782) (2.59) (4.01) (5.75)[.0866; 2.36]<-.004711>
YD/DA ;THE/DB ;PSI/DP .185 (.0176) (.0644) (.0699) (.0794) (1.03) (2.59) (4.01) (5.75)[-.0186; 8.37]<.001361>

ID/DC ;PHI/DA ;THE/DB 1.69 (0) (.0274) (.0644) (.0699) (2.59) (5.75)[.599; .222][.686; 2.56]<.001011>
ID/DC ;PHI/DA ;PSI/DP 8.40 (.0261) (.0644) (.0659) (.0794) (1.03) (2.71) (4.01) (5.75)[.831; .284]<.0003861>
ID/DC ;PHI/DA ;THE/DB .0327 (0) (.0644) (.0699) (2.59) (-8.80) (5.75)[.619; .238][.699; 2.62]<-.004111>

ID/DC ;PHI/DA ;PSI/DP .112 (.0644) (.0658) (.0794) (.327) (.580) (4.01) (5.75) (7.75)[-.811; 2.04]<.005291>
YD/DP ;PHI/DA ;THE/DB -.124 (.0176) (.0644) (.0699) (.0794) (1.03) (2.18) (-2.39) (2.59) (4.01) (5.75)<.0002371>
ID/DB ;PHI/DA ;PSI/DP -1.56 (-.00217) (.0644) (.0648) (.0699) (.0794) (2.59) (4.01) (5.75)[.0422; 2.53]<.2998-4>

ID/DC ;PHI/DA ;THE/DB ;PSI/DP -1.55 (.0230) (.0644) (.0660) (.0699) (.0794) (2.59) (4.01) (5.75)<-.5038-4>
ID/DC ;PHI/DA ;THE/DB ;PSI/DP -.0234 (.0644) (.0648) (.0699) (.0794) (2.59) (4.01) (5.75) (-6.23)<.0002011>

TABLE IV-5 CONTINUED
AH-IG TRANSFER FUNCTION FACTORS

CASE 71 60 KT AUTOROTATION SCAS OFF

DENOMINATOR: (0) (-.165) (.855)[.0506;.265][.368;1.20][.961;1.24]<-.0247>

CONTROL NUMERATORS:

PHI/DA .443 (0)[.0756;.276][.672;.923][.378;1.20]<.0414>
THE/DB -.148 (0) (-.00609) (-.162) (.812) (1.91)[.479;1.20]<-.000413>
PSI/DP -.980 (-.564) (.581) (1.94)[.0833;.272][.621;.933]<.0401>

PHI/DB .0117 (0) (-1.17) (9.32)[.304;.237][.232;1.81]<-.0236>
THE/DA .0604 (0) (-.0351) (.0393) (.810)[.389;1.20]<-.000130>

PHI/DA ;THE/DB -.0657 (0) (-.00946) (.878)[.396;1.22]<.000816>
PHI/DA ;PSI/DP -.446 (.135)[.0763;.279][.643;.888]<-.00368>
THE/DB ;PSI/DP .145 (-.00899) (-.572) (.614) (.892) (1.85)<.000756>

PHI/DB ;PSI/DP -.0455 (.102) (.244) (-.335)[.579;1.83]<.00127>
PHI/DP ;THE/DB -.0564 (0) (-.00902) (.867)[.251;2.30]<.00233>
PHI/DC ;THE/DB -.0224 (0) (.0194) (-.572)[.586;1.86]<.000863>

THE/DA ;PSI/DP -.0830 (.0494) (-.126) (.157) (.801)<.625E-4>
THE/DP ;PHI/DA .00232 (0) (.0557) (.227) (1.10) (-5.14)<-.000166>
THE/DC ;PHI/DA .0330 (0) (.0139) (1.81)[.401;1.26]<.00131>

PSI/DA ;THE/DB -.00440 (-.00950) (.752) (1.61)[-.0984;2.23]<.000252>
PSI/DB ;PHI/DA .0392 (.151)[-.0701;.122][-.112;1.78]<.000278>
XD/DB ;PHI/DA .476 (0) (.723)[.396;1.21][-.00216;2.31]<2.78>

YD/DA ;THE/DB -.112 (-.00949) (.893)[.328;1.22][.00128;4.14]<.0242>
ZD/DB ;PHI/DA 1.22 (0) (-.0357)[.410;1.24][.127;2.07]<-.288>
XD/DC ;PHI/DA .353 (0) (1.43) (-3.76)[.390;1.26]<-3.02>

YD/DP ;THE/DB -.260 (-.00899) (.870)[-.704;2.03][.727;2.95]<.0729>
ZD/DC ;PHI/DA -6.50 (0) (.0548)[.164;1.01][.446;1.19]<-.511>

PHI/DA ;THE/DB ;PSI/DP .0660 (-.00930) (.135) (.868)<-.715E-4>
PHI/DC ;THE/DB ;PSI/DP .0208 (-.0233) (.151) (1.52)<-.000112>
THE/DC ;PHI/DA ;PSI/DP -.0330 (.0135) (.135) (1.87)<-.000113>

PSI/DC ;PHI/DA ;THE/DB -.0200 (-.00419) (.143)<.126E-4>
XD/DB ;PHI/DA ;PSI/DP -.479 (.135) (.720)[-.00354;2.31]<-.248>
YD/DA ;THE/DB ;PSI/DP .117 (-.00915) (.865)[-.000826;4.02]<-.0153>

ZD/DC ;PHI/DA ;THE/DB .872 (0) (0)[.407;1.21]<1.28>
ZD/DC ;PHI/DA ;PSI/DP 6.54 (.0572) (.135)[.198;.966]<.0470>
XD/DC ;PHI/DA ;THE/DB -.0378 (0) (2.53)[.378;1.24]<-.148>

XD/DC ;PHI/DA ;PSI/DP -.346 (.135) (1.52) (-3.76)<.266>
YD/DP ;PHI/DA ;THE/DB -.0724 (-.00929) (.868) (3.40) (-3.49)<-.00689>
ZD/DB ;PHI/DA ;PSI/DP -1.23 (-.0361) (.135)[.124;2.09]<.0260>

ZD/DC ;PHI/DA ;THE/DB ;PSI/DP -.875 (0) (.135)<-.118>
XD/DC ;PHI/DA ;THE/DB ;PSI/DP .0379 (.135) (2.50)<.0127>

TABLE IV-5 CONTINUED
AH-1G TRANSFER FUNCTION FACTORS

CASE 71 60KT AUTOROTATION SCAS ON

DENOMINATOR: (0) (.0644) (-.1[illegible]) (.2[illegible]) (.640) (1.48) (2.13)[.00162;.143][.819;.385][.626;2.67][.826;3.88]<-.001845>

CONTROL NUMERATORS:

PHI/DA .443 (0) (.0644) (.261) (.640) (1.47) (2.22) (5.75)[-.00734;.143][.706;.265][.628;2.69]<.0589E2>
THE/DB -.146 (0) (-.00879) (.0658) (.0699) (-.198) (.965) (2.59)[.813;.385][.627;2.72][.829;4.04]<-.1848E-4>
PST/DP -.980 (.0794) (.261) (-.324) (.640) (1.47) (2.25) (4.91)[-.00654;.143][.860;.258][.848;3.36]<.0008555>

PSI/DB .146 (0) (.0699) (-.692) (2.59)[.301;.184][.994;.359][.866;1.38][.809;2.26]<-.0005231>
THE/DA .0807 (0) (.0644) (-.0458) (.0644) (.417) (.434) (.835) (5.75)[.692;.263][.622;2.68]<-.3649-5>

PHI/DA ;THE/DB -.0657 (0) (-.00895) (.0644) (.0699) (.865) (2.59) (5.75)[.706;.264][.622;2.70]<.1982E-4>
PHI/DA ;PSI/DP -.486 (.0644) (.0794) (.135) (.261) (.640) (1.49) (2.16) (4.01) (5.75)[-.00752;.141]<-.7962E-4>
THE/DB ;PSI/DP .164 (-.00899) (.0699) (.0794) (-.324) (.865) (2.59) (4.01)[.860;.257][.839;3.40]<.1618E-4>

PHI/DB ;PSI/DP -.0855 (.0699) (.0794) (.135) (.248) (-.335) (.373) (1.00) (2.59) (4.01)[.579;1.83]<.2718E-4>
PHI/DP ;THE/DB -.0564 (0) (-.00902) (.0699) (.0794) (.434) (.699) (.862) (2.59) (4.01)[.361;2.55]<.4988E-4>
PHI/DC ;THE/DB -.3224 (0) (.3207) (.0699) (-.257) (.303) (.344) (2.59)[.979;1.03][.562;2.67]<.1998E-4>

THE/DA ;PSI/DP -.0850 (.0699) (.0644) (.0794) (-.126) (.157) (.417) (.835) (.801) (4.01) (5.75)<.1335E-5>
THE/DP ;PHI/DA .00232 (0) (.0647) (.0644) (.0794) (.227) (.369) (.479) (1.10) (4.01) (-5.37) (5.75)<-.3525E-5>
THE/DC ;PHI/DA .0330 (0) (.0138) (.0644) (.417) (.835) (1.85) (5.75)[.708;.265][.613;2.71]<.2952E-4>

PSI/DA ;THE/DB -.00880 (-.00950) (.0644) (.0699) (.581) (.588) (.752) (1.61) (2.59) (5.75)[-.0986;2.23]<.5372E-5>
PSI/DB ;PHI/DA .0392 (.0644) (.0699) (.151) (.537) (.599) (2.59) (5.75)[-.0703;.122][-.112;1.76]<.5948E-5>
ID/DB ;PHI/DA .476 (0) (.0644) (.0699) (.728) (2.59) (5.75)[.706;.264][-.00287;2.31][.621;2.71]<.0626>

YD/DA ;THE/DB -.112 (-.00949) (.0644) (.0699) (.867) (2.59) (5.75)[.522;.261][.666;2.69][.0156;4.11]<.0005175>
ID/DB ;PHI/DA 1.22 (0) (-.3357) (.0644) (.0699) (2.59) (5.75)[.708;.264][.121;2.08][.639;2.71]<-.005449>
ID/DC ;PHI/DA .986 (0) (.0644) (.321) (.597) (-1.06) (1.86) (5.75)[.707;.266][.611;2.70]<-.0680>

YD/DP ;THE/DB -.260 (-.00899) (.0699) (.0794) (.254) (.863) (1.78) (2.59) (4.01)[-.989;1.40][.663;3.89]<.001555>
ID/DC ;PHI/DA -6.50 (0) (.0625) (.0644) (1.30) (2.07) (5.75)[.822;.261][.669;.270][.628;2.68]<-.3115>

PHI/DA ;THE/DB ;PSI/DP .0660 (-.00930) (.0644) (.0699) (.0794) (.135) (.864) (2.59) (4.01) (5.75)<-.1532E-5>
PHI/DC ;THE/DB ;PSI/DP .0208 (-.0233) (.0699) (.0794) (.151) (.378) (1.00) (1.52) (2.59) (4.01)<-.2389E-5>
THE/DC ;PHI/DA ;PSI/DP -.0330 (.0138) (.0644) (.0794) (.135) (.417) (.835) (1.87) (4.01) (5.75)<-.2402E-5>

PSI/DC ;PHI/DA ;THE/DB -.0290 (-.00839) (.0644) (.0699) (.143) (.541) (.588) (2.59) (5.75)<.2682E-6>
ID/DB ;PHI/DA ;PSI/DP -.877 (.0644) (.0699) (.0794) (.135) (.720) (2.59) (4.01) (5.75)[-.00354;2.11]<-.005380>
YD/DA ;THE/DB ;PSI/DP .117 (-.00935) (.0644) (.0699) (.0794) (.865) (2.59) (4.01) (5.75)[-.000827;4.02]<-.0003327>

ID/DC ;PHI/DA ;THE/DB .871 (0) (0) (.0644) (.0699) (2.59) (5.75)[.707;.260][.624;2.70]<.0287>
ID/DC ;PHI/DA ;PSI/DP 6.54 (.0644) (.0665) (.0794) (.135) (1.04) (2.04) (4.01) (5.75)[.793;.262]<.001000>
ID/DC ;PHI/DA ;THE/DB -.0178 (0) (.0644) (.0699) (2.52) (2.59) (5.75)[.706;.260][.617;2.69]<-.00332>

ID/DC ;PHI/DA ;PSI/DP -.939 (.0644) (.0794) (.135) (.321) (.597) (-1.06) (1.89) (4.01) (5.75)<.005547>
YD/DP ;PHI/DA ;THE/DB -.0724 (-.00929) (.0644) (.0699) (.0794) (.863) (2.59) (1.40) (-1.49) (4.01) (5.75)<-.0001467>
ID/DB ;PHI/DA ;PSI/DP -1.21 (-.0361) (.0644) (.0699) (.0794) (.135) (2.59) (4.01) (5.75)[.124;2.09]<.0005555>

ID/DC ;PHI/DA ;THE/DB ;PSI/DP -.875 (0) (.0644) (.0699) (.0794) (.135) (2.59) (4.01) (5.75)<-.00253>
ID/DC ;PHI/DA ;THE/DB ;PSI/DP .0379 (.0644) (.0699) (.0794) (.135) (2.50) (2.59) (4.01) (5.75)<.000272>

TABLE IV-5 CONTINUED
AH-IG TRANSFER FUNCTION FACTORS

CASE 77 60KT 20 FT/SEC CLIMB SCAS OFF

DENOMINATOR: (0) (.286) (1.33)[-.199;.257][.634;.886][.191;1.08]<.0229>

CONTROL NUMERATORS:

PHI/DA .524 (0)[-.172;.322][.702;.858][.456;1.17]<.0550>
THE/DB -.167 (0) (.00556) (.238) (.899) (1.26)[.204;1.05]<-.000276>
PSI/DP -.919 (1.34)[-.236;.304][-.0369;.367][.611;.848]<-.0110>

PHI/DB .0366 (0) (-.360) (.445)[.436;1.05][.821;2.63]<-.0450>
THE/DA .0848 (0) (-.0204) (.0604) (.989)[.406;1.14]<-.000127>

PHI/DA ;THE/DB -.0875 (0) (.00821) (.915)[.455;1.18]<-.000913>
PHI/DA ;PSI/DP -.492 (.0678)[-.160;.315][.707;.844]<-.00235>
THE/DB ;PSI/DP .154 (.00780) (.897) (1.27)[-.217;.396]<.000214>

PHI/DB ;PSI/DP -.0339 (.0690) (.337) (-.312)[.799;2.46]<.00136>
PHI/DP ;THE/DB -.0613 (0) (.00791) (-.873) (.392) (1.72)<.000647>
PHI/DC ;THE/DB -.00790 (0) (0) (1.05)[.531;3.84]<-.121>

THE/DA ;PSI/DP -.0757 (.00583) (.974)[-.0904;.294]<-.371E-4>
THE/DP ;PHI/DA .00821 (0) (.00673) (1.20)[-.0608;1.44]<.000137>
THE/DC ;PHI/DA .00723 (0) (.0303) (7.21)[.487;1.07]<.00179>

PSI/DA ;THE/DB -.00479 (.00827) (-.749) (.910) (1.39) (-7.60)<-.000285>
PSI/DB ;PHI/DA -.0174 (.0653) (1.74)[-.0471;.598]<-.000961>
XD/DB ;PHI/DA .678 (0) (.811)[.454;1.18][.0291;2.17]<3.59>

YD/DA ;THE/DB -.152 (.00828) (.915)[.388;1.12][.0351;4.40]<-.0283>
ZD/DB ;PHI/DA 1.57 (0) (-.00768)[.450;1.18][.0690;2.25]<-.0856>
XD/DC ;PHI/DA -.0307 (0) (4.42)[.501;1.08][-.261;3.52]<-1.95>

YD/DP ;THE/DB -.288 (.00778) (.891) (-1.25) (1.78)[.0514;2.19]<.0213>
ZD/DC ;PHI/DA -7.91 (0) (.160)[.0799;.772][.457;1.06]<-.848>

PHI/DA ;THE/DB ;PSI/DP .0822 (.00810) (.0676) (.920)<.414E-4>
PHI/DC ;THE/DB ;PSI/DP .0425 (-.00172) (.0631) (1.23)<-.566E-5>
THE/DC ;PHI/DA ;PSI/DP -.0115 (.0245) (.0695) (4.20)<-.820E-4>

PSI/DC ;PHI/DA ;THE/DB -.0502 (.00120) (.0748) (.861)<-.388E-5>
XD/DB ;PHI/DA ;PSI/DP -.636 (.0576) (.816)[.0284;2.17]<-.165>
YD/DA ;THE/DB ;PSI/DP .148 (.00810) (.919)[-.0136;4.32]<.0206>

ZD/DC ;PHI/DA ;THE/DB 1.30 (0) (.0109)[.444;1.09]<.0168>
ZD/DC ;PHI/DA ;PSI/DP 7.46 (.0683) (.146)[.0798;.766]<.0436>
XD/DC ;PHI/DA ;THE/DB -.0526 (0)[.507;1.27]<-.0648>

XD/DC ;PHI/DA ;PSI/DP .0545 (.0699) (2.50)[-.284;3.40]<.169>
YD/DP ;PHI/DA ;THE/DB -.0948 (.00810) (.909) (2.33) (-2.53)<.00411>
ZD/DP ;PHI/DA ;PSI/DP -1.47 (0) (.0678)[.0666;2.26]<-.511>

ZD/DC ;PHI/DA ;THE/DB ;PSI/DP -1.21 (.00936) (.0687)<-.000779>
XD/DC ;PHI/DA ;THE/DB ;PSI/DP .00575 (.0675) (9.89)<.00384>

MICROFILMED FROM
BEST AVAILABLE COPY

TABLE IV-5 CONTINUED
AH-1G TRANSFER FUNCTION FACTORS

CASE 81 HOVER AT 10000' SCAS OFF

DENOMINATOR: (0) (.349) (.658)[-.240;.407][-.243;.545][.953;.806]<.00733>

CONTROL NUMERATORS:

PHI/DA .493 (0) (.0461) (.479)[-.388;.325][.919;.446]<.000328>
THE/DB -.150 (0) (.0137) (.362) (.430) (1.27)[-.189;.538]<-.000117>
PSI/DP -.664 (.463)[-.0253;.432][-.458;.461][.951;.866]<-.00957>

PHI/DB -.0455 (0) (.0667) (.361) (.420) (-3.52)[.0894;.565]<.000518>
THE/DA .114 (0) (-.0207) (.272) (.556)[.0152;.540]<-.000104>

PHI/DA ;THE/DB -.0739 (0) (-.00291) (.0665) (.355) (.417)<.212E-5>
PHI/DA ;PSI/DP -.334 (.0185)[-.385;.323][.938;.842]<-.000126>
THE/DB ;PSI/DP .0999 (.00481) (.284) (1.31)[-.135;.421]<.317E-4>

PHI/DB ;PSI/DP .0312 (.0185) (.321) (-3.50)[.0838;.557]<-.000201>
PHI/DP ;THE/DB -.0287 (0) (.376) (.493)[-.621;.0134]<-.956E-6>
PHI/DC ;THE/DB .00923 (0) (.0301) (.358) (.466) (-.523)<-.216E-4>

THE/DA ;PSI/DP -.0746 (-.00631) (.394)[-.0715;.544]<.589E-4>
THE/DP ;PHI/DA .00726 (0) (-.00214) (.140)[.479;.773]<-.130E-5>
THE/DC ;PHI/DA .00922 (0) (.346) (2.40)[.536;.0425]<.138E-4>

PSI/DA ;THE/DB -.00492 (-.00286) (.322) (.995) (-1.20) (-5.58)<.301E-4>
PSI/DB ;PHI/DA -.00108 (.0210) (.0377) (.961) (-1.20) (-1.66)<-.167E-5>
XD/DB ;PHI/DA .625 (0) (.0664) (.338) (.422)[.0485;1.95]<.022E>

YD/DA ;THE/DB -.127 (-.00286) (.0529)[.998;.378][.0191;4.31]<.509E-4>
ZD/DB ;PHI/DA .0793 (0) (.0663) (.481) (-1.39)[.358;1.33]<-.00617>
XD/DC ;PHI/DA -.0389 (0) (.0332) (.341) (1.83)[-.265;3.16]<-.00805>

YD/DP ;THE/DB -.165 (.00674) (-.0449) (.348) (.578)[.0517;2.31]<.535E-4>
ZD/DC ;PHI/DA -8.96 (0) (.127) (.248) (.476)[-.291;.270]<-.00541>

PHI/DA ;THE/DB ;PSI/DP .0501 (-.00290) (.0185) (.305)<-.820E-6>
PHI/DC ;THE/DB ;PSI/DP .0118 (.0208) (.0631) (.572)<.889E-5>
THE/DC ;PHI/DA ;PSI/DP -.0106 (.00952) (.0313) (1.47)<-.465E-5>

PSI/DC ;PHI/DA ;THE/DB -.0447 (-.00312) (.0238) (.351)<.116E-5>
XD/DB ;PHI/DA ;PSI/DP -.423 (.0185) (.293)[.0484;1.95]<-.00876>
YD/DA ;THE/DB ;PSI/DP .0898 (-.00287) (.304)[-.0147;4.24]<-.00141>

ZD/DC ;PHI/DA ;THE/DB .742 (0) (.0166) (.0529) (.345)<.000226>
ZD/DC ;PHI/DA ;PSI/DP 3.38 (.0164) (.425)[-.253;.262]<.00162>
XD/DC ;PHI/DA ;THE/DB -.00587 (0) (.107) (.342) (4.68)<-.00101>

XD/DC ;PHI/DA ;PSI/DP .0661 (.0230) (1.18)[-.246;2.54]<.0116>
YD/DP ;PHI/DA ;THE/DB -.0568 (-.00290) (.123) (-.244) (.280)<-.138E-5>
ZD/DB ;PHI/DA ;PSI/DP -.0538 (.0185) (-1.39)[.377;1.31]<.00238>

ZD/DC ;PHI/DA ;THE/DB ;PSI/DP -.506 (.00671) (.0227)<-.771E-4>
XD/DC ;PHI/DA ;THE/DB ;PSI/DP .00358 (.0179) (4.23)<.000399>

TABLE IV-5 CONTINUED
AH-IG TRANSFER FUNCTION FACTORS

CASE 92 60KT AFT CG SCAS OFF

DENOMINATOR: (0) (.0194) (1.36)[-.0453;.247][.766;.799][.358;1.20]<.00147>

CONTROL NUMERATORS:

PHI/DA .496 (0)[-.185;.303][.901;.745][.389;1.20]<.0366>
THE/DB -.171 (0) (.00326) (.0301) (.895) (1.28)[.358;1.20]<-.277E-4>
PSI/DP -.928 (-.192) (.280) (1.42)[-.0845;.287][.735;.839]<.00410>

PHI/DB .0346 (0) (.226) (-.243) (1.99) (3.55)[.356;1.24]<-.0197>
THE/DA .0867 (0) (-.00763) (.0496) (.882)[.363;1.20]<-.417E-4>

PHI/DA ;THE/DB -.0846 (0) (.0116) (.888)[.391;1.20]<-.00125>
PHI/DA ;PSI/DP -.473 (.0841)[-.167;.297][.880;.747]<-.00196>
THE/DB ;PSI/DP .158 (.0148) (-.180) (.310) (.879) (1.29)<-.000148>

PHI/DB ;PSI/DP -.0457 (.0824) (.231) (-.249)[.889;2.41]<.00126>
PHI/DP ;THE/DB -.0545 (0) (.0185) (.923)[.424;.823]<-.000494>
PHI/DC ;THE/DB -.0183 (0) (.00593) (1.37)[.398;1.45]<-.000316>

THE/DA ;PSI/DP -.0817 (-.00407) (.874)[.181;.231]<.155E-4>
THE/DP ;PHI/DA .00264 (0) (-.00374) (.982)[-.222;2.13]<-.439E-4>
THE/DC ;PHI/DA .0199 (0) (.0255) (1.57)[.436;1.14]<.00104>

PSI/DA ;THE/DB -.00691 (.0117) (.872) (1.23)[-.854;2.09]<-.000379>
PSI/DB ;PHI/DA .0198 (.0751) (.259) (-.295)[.382;2.21]<-.000554>
XD/DB ;PHI/DA .603 (0) (.860)[.391;1.20][.0154;2.15]<3.45>

YD/DA ;THE/DB -.144 (.0117) (.888)[.319;1.16][.0273;4.16]<-.0384>
ZD/DB ;PHI/DA 1.54 (0) (-.00910)[.405;1.20][.0867;2.22]<-.0990>
XD/DC ;PHI/DA -.0591 (0) (1.84) (8.46)[.439;1.19]<-1.31>

YD/DP ;THE/DB -.296 (.0148) (.915)[-.663;1.03][.622;1.87]<-.0150>
ZD/DC ;PHI/DA -7.41 (0) (.151)[.218;.622][.379;1.15]<-.570>

PHI/DA ;THE/DB ;PSI/DP .0806 (.0112) (.0837) (.876)<.661E-4>
PHI/DC ;THE/DB ;PSI/DP .0339 (.00700) (.0853) (1.34)<.270E-4>
THE/DC ;PHI/DA ;PSI/DP -.0198 (.0209) (.0851) (1.54)<-.541E-4>

PSI/DC ;PHI/DA ;THE/DB -.0256 (.00883) (.0912) (1.27)<-.262E-4>
XD/DB ;PHI/DA ;PSI/DP -.574 (.0838) (.854)[.0159;2.15]<-.190>
YD/DA ;THE/DB ;PSI/DP .145 (.0111) (.876)[-.00841;4.21]<.0251>

ZD/DC ;PHI/DA ;THE/DB 1.20 (0) (.0138)[.392;1.16]<.0223>
ZD/DC ;PHI/DA ;PSI/DP 7.09 (.0836) (.136)[.189;.638]<.0327>
XD/DC ;PHI/DA ;THE/DB -.0250 (0) (1.29)[.332;1.28]<-.0533>

XD/DC ;PHI/DA ;PSI/DP .589 (.0848) (1.66)<.0829>
YD/DP ;PHI/DA ;THE/DB -.101 (.0112) (.871) (2.55) (-2.68)<.00669>
ZD/DB ;PHI/DA ;PSI/DP -1.46 (-.00709) (.0840)[.0861;2.21]<.00426>

ZD/DC ;PHI/DA ;THE/DB ;PSI/DP -1.15 (.0126) (.0844)<-.00122>
XD/DC ;PHI/DA ;THE/DB ;PSI/DP .0230 (.0823) (1.30)<.00246>

TABLE IV-5 CONTINUED
AH-IG TRANSFER FUNCTION FACTORS

CASE 94 HOVER AT LIGHT WEIGHT SCAS OFF

DENOMINATOR: (0) (.393) (.779)[-.181;.267][-.289;.440][.731;.687]<.00231>

CONTROL NUMERATORS:

PHI/DA .484 (0) (.0792) (.487)[-.461;.248][.884;.507]<.000294>
THE/DB -.132 (0) (.0530) (.871)[-.221;.401][.933;.473]<-.000219>
PSI/DP -.840 (.715)[.0412;.247][-.559;.336][.677;.739]<-.00226>

PHI/DB .151 (0) (.0781)[-.0192;.481][.983;.512]<.000714>
THE/DA .0955 (0) (-.0375) (.338) (.694)[.0563;.326]<-.892E-4>

PHI/DA ;THE/DB -.0638 (0) (0) (.0782)[.982;.486]<-.00118>
PHI/DA ;PSI/DP -.415 (.0252)[-.457;.246][.900;.492]<-.000154>
THE/DB ;PSI/DP .111 (.806)[-.901;.126][.724;.408]<.000235>

PHI/DB ;PSI/DP -.130 (.0247) (.525)[-.0314;.471]<-.000372>
PHI/DP ;THE/DB -.0296 (0) (-.0147) (.0679)[.921;.532]<.838E-5>
PHI/DC ;THE/DB -.0111 (0) (.0576) (.137) (.403)<-.353E-4>

THE/DA ;PSI/DP -.0832 (-.0197) (.636)[-.215;.303]<.957E-4>
THE/DP ;PHI/DA -.00427 (0) (-.0106) (.149) (-.367) (1.35)<-.342E-5>
THE/DC ;PHI/DA .00335 (0) (.0233) (.0560) (.430) (7.76)<.146E-4>

PSI/DA ;THE/DB -.00524 (0) (.502) (1.16) (-2.04) (-2.74)<-.0171>
PSI/DB ;PHI/DA .000281 (-.00915) (.127) (-2.00)[.469;2.70]<.477E-5>
XD/DB ;PHI/DA .629 (0) (.0786)[.981;.479][.0477;1.81]<.0371>

YD/DA ;THE/DB -.115 (0) (.0638)[.981;.470][.0226;4.20]<-.0287>
ZD/DB ;PHI/DA .0946 (0) (.0790) (.519) (-1.69)[.322;1.38]<-.0125>
XD/DC ;PHI/DA -.0104 (0) (.0700) (.428) (2.87)[-.650;5.28]<-.0250>

YD/DP ;THE/DB -.221 (-.0261) (.0582)[.934;.530][-.0130;2.05]<.000396>
ZD/DC ;PHI/DA -7.27 (0) (.0572) (-.109) (.438)[.738;.222]<.000972>

PHI/DA ;THE/DB ;PSI/DP .0547 (0) (.0240) (.460)<.000603>
PHI/DC ;THE/DB ;PSI/DP .0163 (.0166) (.0439) (1.14)<.136E-4>
THE/DC ;PHI/DA ;PSI/DP -.0205 (.00916) (.0304)<-.571E-5>

PSI/DC ;PHI/DA ;THE/DB -.0351 (0) (.0317) (.584)<-.000649>
XD/DB ;PHI/DA ;PSI/DP -.539 (.0245) (.445)[.0476;1.81]<-.0193>
YD/DA ;THE/DB ;PSI/DP .105 (0) (.458)[-.0137;4.09]<.806>

ZD/DC ;PHI/DA ;THE/DB .958 (0) (.0273) (.0557) (.426)<.000620>
ZD/DC ;PHI/DA ;PSI/DP 6.25 (.0234) (-.0657)[.864;.167]<-.000267>
XD/DC ;PHI/DA ;THE/DB -.0394 (0) (.116) (.401)<-.00183>

XD/DC ;PHI/DA ;PSI/DP .0102 (.0271) (2.90)[-.806;4.73]<.0179>
YD/DP ;PHI/DA ;THE/DB -.0810 (0) (.115) (-.250) (.442)<.00103>
ZD/DB ;PHI/DA ;PSI/DP -.0812 (.0253) (-1.69)[.329;1.37]<.00653>

ZD/DC ;PHI/DA ;THE/DB ;PSI/DP -.824 (.00947) (.0311)<-.000242>
XD/DC ;PHI/DA ;THE/DB ;PSI/DP .0333 (.0209)<.000695>

TABLE IV-5 CONTINUED
AH-1G TRANSFER FUNCTION FACTORS

CASE 95 60KT AT LIGHT WEIGHT SCAS OFF

DENOMINATOR: (0) (-.0190) (1.28) [-.0153;.252][.725;.987][.430;1.35]<-.00221>

CONTROL NUMERATORS:

PHI/DA .466 (0)[-.135;.292][.836;.877][.415;1.34]<.0550>
THE/DB -.129 (0) (.0142) (-.0168)[.996;1.15][.433;1.35]<.750E-4>
PSI/DP -1.06 (-.294) (.468) (1.32)[-.0856;.283][.684;.949]<.0136>

PHI/DB .0332 (0) (.217) (-.224)[.881;1.36][.790;2.37]<-.0168>
THE/DA .0785 (0) (-.0119) (.0505) (1.11)[.393;1.32]<-.919E-4>

PHI/DA ;THE/DB -.0602 (0) (.00921) (1.16)[.419;1.34]<-.00116>
PHI/DA ;PSI/DP -.504 (.0997)[-.129;.290][.825;.870]<-.00320>
THE/DB ;PSI/DP .137 (.0102) (-.298) (.642)[.991;1.08]<-.000310>

PHI/DB ;PSI/DP -.0465 (.0948) (.254) (-.261)[.633;2.26]<.00149>
PHI/DP ;THE/DB -.0366 (0) (.0101) (1.18)[.406;1.53]<-.00102>
PHI/DC ;THE/DB -.0105 (0) (0) (2.42)[.820;1.21]<-.0371>

THE/DA ;PSI/DP -.0842 (-.0205) (1.11)[.251;.187]<.671E-4>
THE/DP ;PHI/DA -.00473 (0) (-.0231) (-.971) (1.36)<-.000205>
THE/DC ;PHI/DA .00504 (0) (.0246) (8.15)[.450;1.29]<.00169>

PSI/DA ;THE/DB -.00443 (.00924) (1.10) (1.64)[-.939;2.19]<-.000351>
PSI/DB ;PHI/DA .0174 (.0880) (.364) (-.493)[-.123;1.51]<-.000622>
XD/DB ;PHI/DA .536 (0) (1.09)[.419;1.35][.0244;1.96]<4.07>

YD/DA ;THE/DB -.109 (.00925) (1.17)[.342;1.29][.0345;4.27]<-.0355>
ZD/DB ;PHI/DA 1.76 (0) (.00204)[.425;1.36][.0902;1.99]<.0262>
XD/DC ;PHI/DA .0707 (0) (-2.97)[.469;1.34][.486;2.43]<-2.20>

YD/DP ;THE/DB -.265 (.0102) (1.19)[-.696;1.53][.779;2.04]<-.0314>
ZD/DC ;PHI/DA -8.61 (0) (.144)[.156;.670][.419;1.30]<-.942>

PHI/DA ;THE/DB ;PSI/DP .0651 (.00877) (.0995) (1.15)<.656E-4>
PHI/DC ;THE/DB ;PSI/DP .0208 (.00337) (.105) (2.14)<.157E-4>
THE/DC ;PHI/DA ;PSI/DP -.00562 (.0214) (.100) (7.62)<-.921E-4>

PSI/DC ;PHI/DA ;THE/DB -.0155 (.00541) (.110) (1.81)<-.168E-4>
XD/DB ;PHI/DA ;PSI/DP -.579 (.0995) (1.09)[.0240;1.96]<-.241>
YD/DA ;THE/DB ;PSI/DP .125 (.00872) (1.16)[-.00804;4.12]<.0213>

ZD/DC ;PHI/DA ;THE/DB 1.09 (0) (.0102)[.420;1.31]<.0191>
ZD/DC ;PHI/DA ;PSI/DP 9.33 (.0996) (.141)[.139;.665]<.0578>
XD/DC ;PHI/DA ;THE/DB -.0149 (0) (2.59)[.392;1.42]<-.0781>

XD/DC ;PHI/DA ;PSI/DP -.0701 (.100) (-3.04)[.498;2.54]<.138>
YD/DP ;PHI/DA ;THE/DB -.0927 (.00877) (1.15) (2.59) (-2.75)<.00684>
ZD/DB ;PHI/DA ;PSI/DP -1.90 (.00341) (.0997)[.0983;2.60]<-.00259>

ZD/DC ;PHI/DA ;THE/DB ;PSI/DP -1.18 (.00936) (.100)<-.00111>
XD/DC ;PHI/DA ;THE/DB ;PSI/DP .0155 (.0981) (2.69)<.00410>

MICROFILMED FROM
BEST AVAILABLE COPY

TABLE IV-5 CONTINUED
AH-1G TRANSFER FUNCTION FACTORS

CASE 100 MAX CLIMB AT 60KT LIGHT WEIGHT SCAS OFF

DENOMINATOR: (0)[-.354;.205][.0882;.737][.563;1.31][.406;1.36]<.0732>

CONTROL NUMERATORS:

PHI/DA .531 (0)[-.139;.244][.331;1.41][.483;1.70]<.181>
THE/DB -.126 (0)(-.0213)(1.60)[-.0131;.638][.636;1.22]<.00259>
PSI/DP -1.03 (1.07)[-.0180;.137][-.688;.563][.362;1.47]<-.0141>

PHI/DB -.0135 (0)(-.444)(-8.56)[.637;.814][.732;2.02]<-.139>
THE/DA .0631 (0)(-.0398)(.0558)(2.18)[.225;1.50]<-.000685>

PHI/DA ;THE/DB -.0671 (0)(-.0183)(1.62)[.449;1.60]<.00510>
PHI/DA ;PSI/DP -.555 (.0598)[-.122;.227][.402;1.44]<-.00353>
THE/DB ;PSI/DP .133 (-.00442)(1.01)(1.62)[-.695;.547]<-.000289>

PHI/DB ;PSI/DP .0278 (.0621)(-.353)(.456)(1.70)(-5.21)<.00246>
PHI/DP ;THE/DB -.0272 (0)(-.00380)(-1.52)(1.62)(2.68)<-.000682>
PHI/DC ;THE/DB -.0224 (0)(-.0472)(1.24)(8.45)<.0111>

THE/DA ;PSI/DP -.0539 (.00244)(2.07)[-.629;.712]<-.000138>
THE/DP ;PHI/DA .0213 (0)(.00267)(1.59)[.101;2.18]<.000431>
THE/DC ;PHI/DA -.0699 (0)(.00590)(-2.35)[.377;1.51]<.00221>

PSI/DA ;THE/DB .0472 (-.0183)(-.516)(1.47)(2.75)<.00179>
PSI/DB ;PHI/DA -.0331 (.0468)[-.136;.386][.0478;2.36]<-.00129>
XD/DB ;PHI/DA .762 (0)(.990)[.452;1.61][.0521;2.11]<8.75>

YD/DA ;THE/DB -.126 (-.0183)(1.62)[.361;1.50][.0693;4.37]<.160>
ZD/DB ;PHI/DA 1.77 (0)(-.0114)[.421;1.59][.0326;2.34]<-.281>
XD/DC ;PHI/DA .152 (0)(-2.53)[.382;1.50][-.0612;3.74]<-12.2>

YD/DP ;THE/DB -.247 (-.00438)(1.61)(-1.68)(2.27)[-.135;1.97]<-.0258>
ZD/DC ;PHI/DA -9.90 (0)(.0870)[.0235;1.16][.384;1.50]<-2.59>

PHI/DA ;THE/DB ;PSI/DP .0714 (-.0145)(.0577)(1.62)<-.967E-4>
PHI/DC ;THE/DB ;PSI/DP .0309 (.0513)(-.0707)(1.69)<-.000189>
THE/DC ;PHI/DA ;PSI/DP .0508 (.00466)(.0608)(-3.86)<-.554E-4>

PSI/DC ;PHI/DA ;THE/DB -.0744 (-.0321)(.0702)(.962)<.000161>
XD/DB ;PHI/DA ;PSI/DP -.799 (.0569)(1.03)[.0523;2.11]<-.208>
YD/DA ;THE/DB ;PSI/DP .139 (-.0140)(1.61)[-.0257;4.25]<-.0564>

ZD/DC ;PHI/DA ;THE/DB 1.48 (0)(-.0209)[.403;1.50]<-.0697>
ZD/DC ;PHI/DA ;PSI/DP 10.3 (.0568)(.0691)[.00942;1.25]<.0630>
XD/DC ;PHI/DA ;THE/DB .0810 (0)(-2.23)[.395;1.58]<-.450>

XD/DC ;PHI/DA ;PSI/DP -.0934 (.0607)(-4.12)[.0159;4.06]<.385>
YD/DP ;PHI/DA ;THE/DB -.104 (-.0147)(-2.06)[1.00;1.66]<-.00862>
ZD/DB ;PHI/DA ;PSI/DP -1.85 (-.00404)(.0586)[.0326;2.34]<.00240>

ZD/DC ;PHI/DA ;THE/DB ;PSI/DP -1.50 (-.0191)(.0589)<.00169>
XD/DC ;PHI/DA ;THE/DB ;PSI/DP -.0612 (.0603)(-3.75)<.0139>

TABLE IV-5 CONTINUED
AH-1G TRANSFER FUNCTION FACTORS

CASE 107 HOVER AT HEAVY WEIGHT SCAS OFF

DENOMINATOR: (0) (.378) (.801)[-.265;.349][-.210;.578][.903;.737]<.00871>

CONTROL NUMERATORS:

PHI/DA .542 (0) (.0689) (.518)[-.383;.324][.908;.486]<.000481>
THE/DB -.191 (0) (.0177) (1.17)[.979;.405][-.180;.566]<-.000208>
PSI/DP -.766 (.544)[.0132;.400][-.484;.443][.898;.863]<-.00973>

PHI/DB .197 (0) (.0686)[.989;.435][.0374;.584]<.000874>
THE/DA .127 (0) (-.0212) (.301) (.612)[.0183;.523]<-.000135>

PHI/DA ;THE/DB -.104 (0) (-.00165) (.0687)[.996;.423]<.210E-5>
PHI/DA ;PSI/DP -.428 (.0181)[-.378;.323][.932;.479]<-.000186>
THE/DB ;PSI/DP .146 (.0280) (.266) (1.17)[-.0907;.339]<.000146>

PHI/DB ;PSI/DP -.160 (.0179) (.373)[.0193;.565]<-.000341>
PHI/DP ;THE/DB -.0723 (0) (-.0154) (.0245)[.952;.400]<.437E-5>
PHI/DC ;THE/DB .0137 (0) (.0308) (.229) (.394) (-.926)<-.353E-4>

THE/DA ;PSI/DP -.100 (-.00918) (.453)[-.0821;.498]<.000104>
THE/DP ;PHI/DA -.000246 (0) (-.00494) (.155) (-2.40) (7.57)<-.342E-5>
THE/DC ;PHI/DA .00341 (0) (.393) (7.88)[.607;.0430]<.196E-4>

PSI/DA ;THE/DB -.00640 (-.00159) (.363) (1.18) (-1.61) (-8.37)<.306E-4>
PSI/DB ;PHI/DA .00660 (.00902) (.0773) (-.739) (1.13)<-.349E-5>
XD/DB ;PHI/DA .713 (0) (.0688)[.998;.417][.0499;2.16]<.0398>

YD/DA ;THE/DB -.168 (-.00160) (.0565)[.992;.416][.0141;4.44]<.516E-4>
ZD/DB ;PHI/DA .103 (0) (.0688) (.523) (-1.44)[.370;1.46]<-.0115>
XD/DC ;PHI/DA -.00796 (0) (.0385) (.389) (3.40)[-.598;5.65]<-.0129>

YD/DP ;THE/DB -.259 (.0210) (-.0314)[.959;.406][.0300;2.96]<.000247>
ZD/DC ;PHI/DA -6.03 (0) (.117) (.300) (.506)[-.272;.267]<-.00763>

PHI/DA ;THE/DB ;PSI/DP .0818 (-.00168) (.0179) (.339)<-.836E-6>
PHI/DC ;THE/DB ;PSI/DP .0341 (.0167) (.0341) (.596)<.116E-4>
THE/DC ;PHI/DA ;PSI/DP -.00254 (.00940) (.0311) (7.91)<-.588E-5>

PSI/DC ;PHI/DA ;THE/DB -.0643 (-.00191) (.0233) (.411)<.118E-5>
XD/DB ;PHI/DA ;PSI/DP -.563 (.0179) (.328)[.0498;2.16]<-.0155>
YD/DA ;THE/DB ;PSI/DP .137 (-.00170) (.338)[-.00949;4.38]<-.00151>

ZD/DC ;PHI/DA ;THE/DB 1.15 (0) (.0178) (.0544) (.390)<.000435>
ZD/DC ;PHI/DA ;PSI/DP 4.77 (.0173) (.463)[-.248;.274]<.00285>
XD/DC ;PHI/DA ;THE/DB -.0404 (0) (.108) (.385)<-.00168>

XD/DC ;PHI/DA ;PSI/DP .0215 (.0222) (2.43)[-.563;3.52]<.0144>
YD/DP ;PHI/DA ;THE/DB -.0772 (-.00168) (.122) (-.285) (.312)<-.141E-5>
ZD/DB ;PHI/DA ;PSI/DP -.0814 (.0181) (-1.46)[.388;1.44]<.00444>

ZD/DC ;PHI/DA ;THE/DB ;PSI/DP -.911 (.00625) (.0224)<-.000128>
XD/DC ;PHI/DA ;THE/DB ;PSI/DP .0337 (.0165)<.000556>

TABLE IV-5 CONCLUDED
AH-IG TRANSFER FUNCTION FACTORS

CASE 108 60KT AT HEAVY WEIGHT SCAS OFF

DENOMINATOR: (0) (.135) (1.59)[-.0797;.289][.688;.781][.258;1.17]<.0149>

CONTROL NUMERATORS:

PHI/DA .524 (0)[-.160;.351][.846;.737][.372;1.18]<.0489>
THE/DB -.192 (0) (.00387) (.123) (.748) (1.52)[.250;1.17]<-.000143>
PSI/DP -.849 (1.62)[-.00429;.226][-.0169;.325][.698;.755]<-.00423>

PHI/DB .0265 (0) (.277) (-.376)[.161;1.13][.995;3.14]<-.0348>
THE/DA .0969 (0) (-.00838) (.0751) (.745)[.333;1.18]<-.631E-4>

PHI/DA ;THE/DB -.101 (0) (.00587) (.747)[.385;1.18]<-.000615>
PHI/DA ;PSI/DP -.457 (.0609)[-.134;.343][.805;.730]<-.00175>
THE/DB ;PSI/DP .163 (.00329) (.734) (1.53)[.0225;.267]<.427E-4>

PHI/DB ;PSI/DP -.0409 (.0614) (.277) (-.373)[.633;2.08]<.00112>
PHI/DP ;THE/DB -.0846 (0) (.00323) (-.484) (.715) (1.29)<.000122>
PHI/DC ;THE/DB -.0176 (0) (0) (1.02)[.240;2.31]<-.0952>

THE/DA ;PSI/DP -.0822 (-.00271) (.744)[.0605;.298]<.148E-4>
THE/DP ;PHI/DA .00693 (0) (-.00239) (.789)[-.230;1.77]<-.408E-4>
THE/DC ;PHI/DA .0238 (0) (.0233) (1.51)[.472;1.07]<.000968>

PSI/DA ;THE/DB -.00509 (.00590) (.745) (1.36) (-1.53) (-4.05)<-.000189>
PSI/DB ;PHI/DA .0213 (.0573) (.278) (-.534)[-.297;1.68]<-.000509>
XD/DB ;PHI/DA .644 (0) (.704)[.384;1.18][.0197;2.30]<3.36>

YD/DA ;THE/DB -.163 (.00591) (.747)[.334;1.15][.0175;4.48]<-.0192>
ZD/DB ;PHI/DA 1.33 (0) (-.0155)[.393;1.19][.0347;2.36]<-.165>
XD/DC ;PHI/DA -.0853 (0) (1.39)[.470;1.11][-.0973;3.02]<-1.35>

YD/DP ;THE/DB -.290 (.00329) (.708) (-.822) (1.24)[.121;2.51]<.00432>
ZD/DC ;PHI/DA -6.60 (0) (.198)[.252;.682][.329;1.10]<-.737>

PHI/DA ;THE/DB ;PSI/DP .0876 (.00550) (.0607) (.738)<.216E-4>
PHI/DC ;THE/DB ;PSI/DP .0450 (0) (.0589) (1.01)<.00269>
THE/DC ;PHI/DA ;PSI/DP -.0231 (.0169) (.0624) (1.37)<-.335E-4>

PSI/DC ;PHI/DA ;THE/DB -.0355 (.00282) (.0663) (1.04)<-.687E-5>
XD/DB ;PHI/DA ;PSI/DP -.560 (.0607) (.699)[.0191;2.30]<-.126>
YD/DA ;THE/DB ;PSI/DP .146 (.00548) (.738)[-.00776;4.41]<.0115>

ZD/DC ;PHI/DA ;THE/DB 1.21 (0) (.00803)[.376;1.14]<.0125>
ZD/DC ;PHI/DA ;PSI/DP 5.78 (.0606) (.154)[.160;.725]<.0284>
XD/DC ;PHI/DA ;THE/DB -.0128 (0) (2.17)[.379;1.34]<-.0497>

XD/DC ;PHI/DA ;PSI/DP .0880 (.0619) (1.26)[-.115;3.04]<.0634>
YD/DP ;PHI/DA ;THE/DB -.0802 (.00550) (.735) (2.52) (-2.68)<.00218>
ZD/DB ;PHI/DA ;PSI/DP -1.16 (-.0129) (.0608)[.0909;2.18]<.00514>

ZD/DC ;PHI/DA ;THE/DB ;PSI/DP -1.05 (.00698) (.0612)<-.000448>
XD/DC ;PHI/DA ;THE/DB ;PSI/DP .0114 (.0600) (2.39)<.00163>

BLANK PAGE

SECTION V

BELL UH-1H

The UH-1H is a single turbine general purpose utility helicopter. The rotor system includes a two-bladed, all-metal, semi-rigid main rotor on an underslung feathering axis hub with a stabilizer bar mounted at right angles to the main rotor blades (see Fig. V-1). The vehicle is powered by a Lycoming T53-L-13 turbo-shaft engine rated at 1400 shaft horsepower.

The control system, as shown in Fig. V-2, is all mechanical with hydraulic actuation. Mechanical stability augmentation is supplied by the stabilizer bar which provides feedback of roll rate and pitch rate about the rotor mast axis. The combination of stabilizer bar inertia and a stabilizer bar dashpot provides a three second lag in the angular rate feedbacks. (This may be interpreted also as a slowly washed out feedback of roll attitude and pitch attitude.) Detailed stabilizer bar equations of motion are presented in Volume Two.

The derivative data presented here were produced by the AGAJ7407 version of the manufacturer's C81 Rotorcraft Flight Simulation Computer Program. Transfer functions are given for the helicopter with and without the stabilizer bar.

Reference 5, the basic data source, provides additional information for the vehicle including detailed drawings, loading breakdowns, control system linkage schematics, and further details concerning the stabilizer bar.

TABLE V-1

UH-1H DESCRIPTIVE DATA

MAIN ROTOR

Blades	2
Radius	7.32 m (24 ft)
Chord	0.533 m (1.75 ft)
Section	NACA 0012
Hub type	Teetering
Undersling	0.132 m (0.433 ft)
Twist	-10.9 deg
Pitch flap coupling (δ_3)	Zero
Shaft tilt	5 deg forward
Design rpm	314 to 324 (power on), 294 to 339 (power off)
Hub location	FS 133.5, WL 136.5
Blade flapping inertia	1641.2 kg-m^2 (1210.5 slug-ft^2)

TAIL ROTOR

Blades	2
Radius	2.59 m (8.5 ft)
Chord	0.297 m (0.958 ft)
Twist	Zero
Gear ratio	5.123
Hub location	FS 479.4, WL 137.6, BL -15.16

ELEVATOR (EACH SIDE, EXCLUDING FUSELAGE CARRY-THROUGH)

Area	1.016 m^2 (10.936 ft^2)
Aspect ratio	2.009
Center of pressure location	FS 363.0, BL $\pm$ 28.1, WL 64.83
Incidence	Variable

VERTICAL STABILIZER

Area	1.036 m^2 (11.15 ft^2)
Aspect ratio	1.426
Center of pressure location	FS 450.3, BL 0.4, WL 104.7

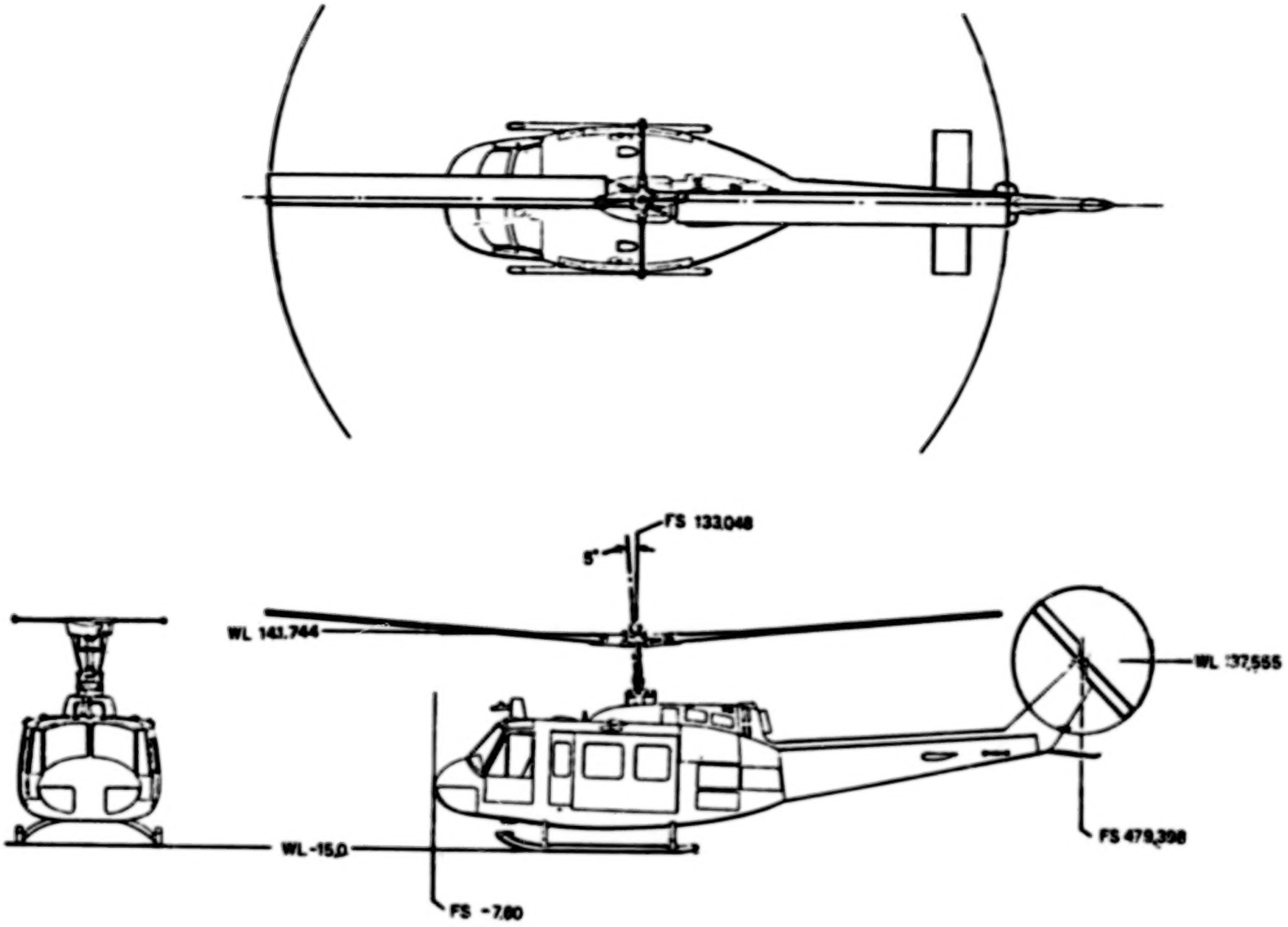

Figure V-1. UH-1H General Arrangement

a. Block Diagram

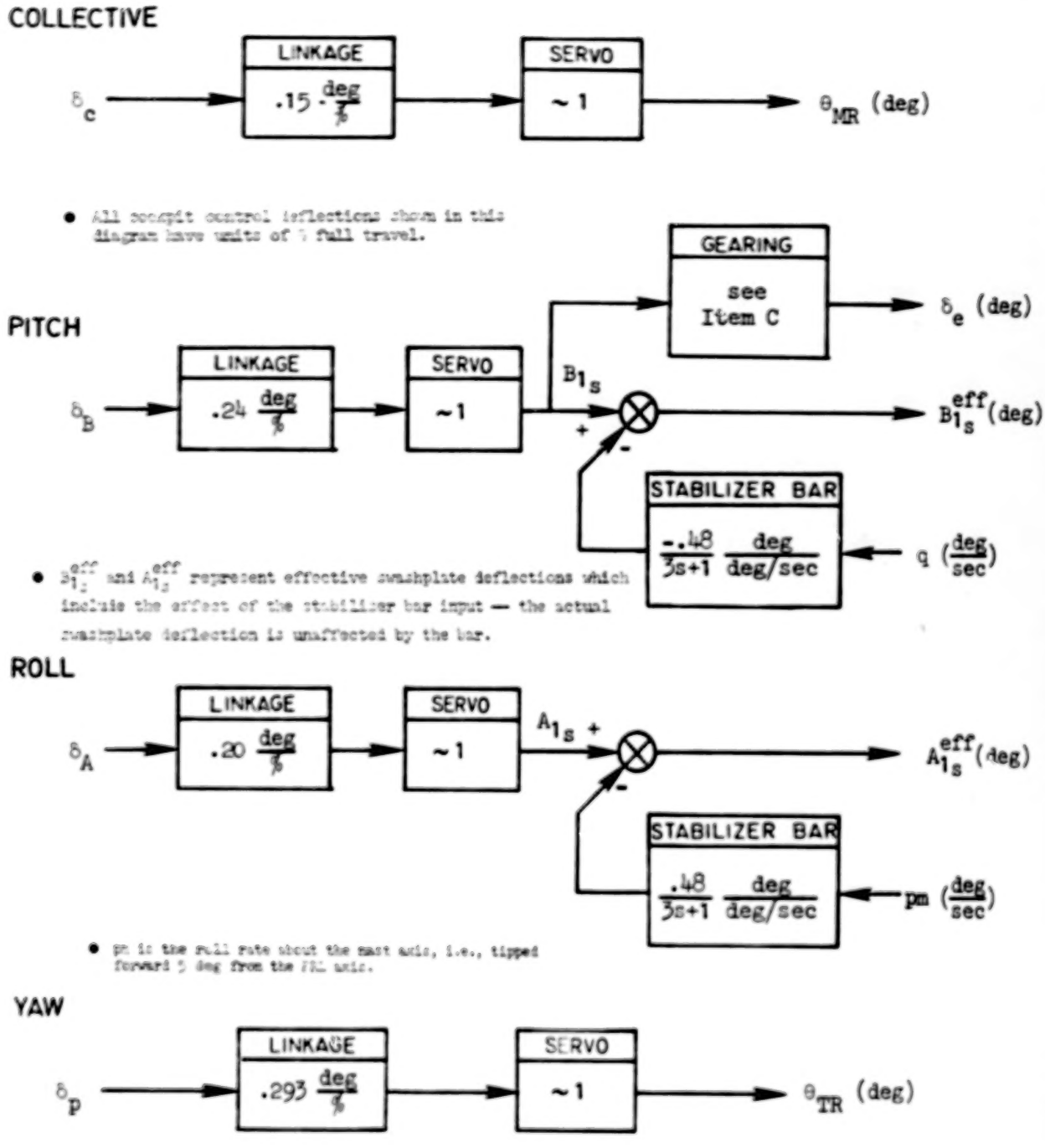

Figure V-2. UH-1H Control System Description

b. Cockpit Controller Characteristics

CONTROLLER	100% FULL TRAVEL cm (in)	FORCE GRADIENT N/cm (lb/in)
Collective, δ_c	27.2 (10.7)	—
Longitudinal Cyclic, δ_B	33.0 (13.)	2.12 (1.21)
Lateral Cyclic, δ_A	33.0 (13.)	1.38 (.79)
Pedal, δ_p	16.5 (6.5)	12.8 (7.3)

c. Swashplate-to-Elevator Gearing

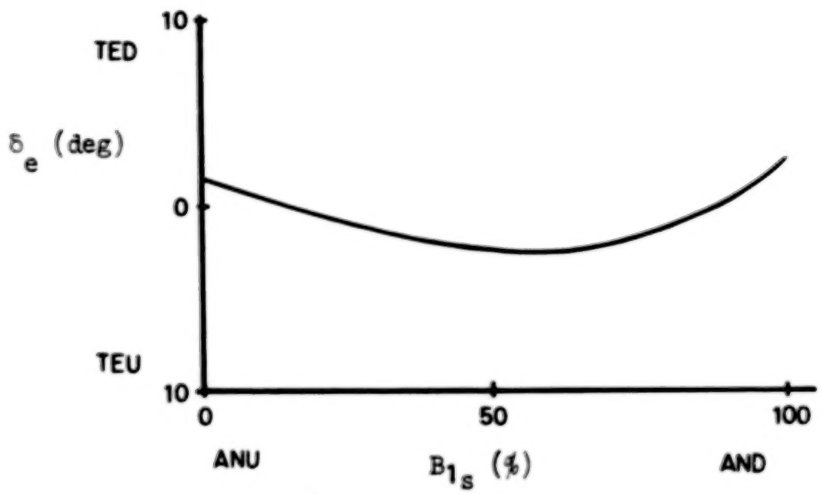

Figure V-2 (Concluded)

a. Loading Envelope

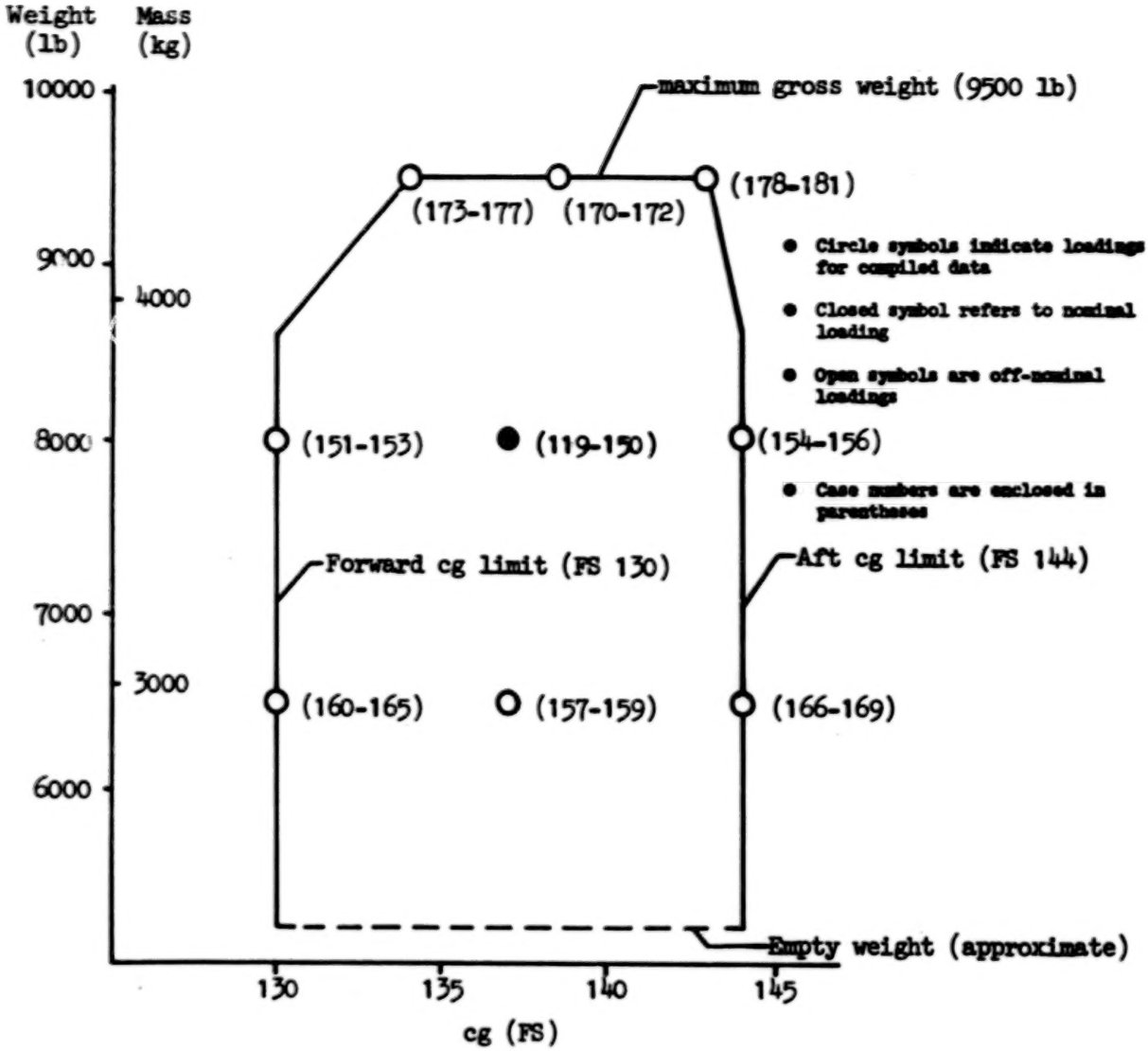

b. Moments of Inertia for Compiled Data

CONDITION	MASS (WEIGHT) kg (lb)	cg FS	cg WL	I_x	I_y	I_z	I_{xz}
				$kg\text{-}m^2$ ($slug\text{-}ft^2$)			
Nominal Weight	3629 (8000)	130 to 144	57.5	3966(2925)	14684(10830)	12541(9250)	1695(1250)
Light Weight	2948 (6500)	130 to 144	61.0	3593(2650)	14033(10350)	11830(8725)	1695(1250)
Heavy Weight	4309 (9500)	134 to 143	54.0	4339(3200)	15321(11300)	13253(9775)	1695(1250)

Figure V-3. UH-1H Loading Summary

TABLE V-2

UH-1H INDEX OF FLIGHT CONDITIONS FOR DERIVATIVES AND TRANSFER FUNCTION FACTORS

CASE	CONDITION	AIRSPEED kt	VERTICAL VELOCITY m/sec(ft/sec)	ALTITUDE m(ft)	MASS (WEIGHT) kg(lb)	cg FS	REPORT PAGE NUMBER		
							DERIVATIVES S.I.(U.S.)	TRANSFER FUNCTIONS	
								BAR OFF	BAR ON
119	Airspeed Variation	-40	Zero	Sea Level	3629 (8000)	137	220(241)	262	263
120		-20						264	265
121		-10							
122		Hover					221(242)	266*	270*
123		10							
124		20						274*	278*
125		40					222(243)	282	
126		60						283*	287*
127		80						291	292
128		100					223(244)	293	294
129		120						295	296
130		130						297	298
131	Maximum Power Climb	Zero†	11.1 (36.3)				224(245)		
132		60	12.4 (40.6)					299	300
133		100	9.7 (31.8)						
134	Autorotation	60	-8.1 (-26.6)				225(246)	301	302
135		100	-15.0 (-49.1)						
136	Descent	Zero†	-3.0 (-10)						
137			-6.1 (-20)				226(247)		
138	Climb		3.0 (10)						
139			6.1 (20)						
140		60	6.1 (20)				227(248)		
141			3.0 (10)						
142	Descent		-3.0 (-10)						
143			-6.1 (-20)				228(249)		
144	Operation at Altitude	Hover	Zero	3048 (10000)					
145		60							
146		100					229(250)		
147	Max Climb at Altitude	Zero†	10.1 (33.2)						
148		60	10.9 (35.6)						
149	Autorotation @Altitude	60	-8.1 (-26.7)				230(251)		
150		100	-14.3 (-47.)						
151	Fwd cg, Nominal Weight	Hover	Zero	Sea Level		130			
152		60					231(252)		
153		100							
154	Aft cg, Nominal Weight	Hover				144			
155		60					232(253)		
156		100							
157	Light Weight	0			2948 (6500)	137			
158		60					233(254)		
159		100							
160	Fwd cg, Light Weight	Hover				130			
161		60					234(255)		
162	...and Max Climb	Zero†	18.1 (59.4)						
163		60	16.5 (54.)						
164	...and Autorotation	Zero†	-15.8 (-52.)				235(256)		
165		60	-9.3 (-30.5)						
166	Aft cg, Light Weight	Hover	Zero			144			
167		60	Zero				236(257)		
168	...and Max Climb		16.6 (54.3)						
169	...and Autorotation		-10.0 (-32.8)						
170	Heavy Weight	Hover	Zero		4309 (9500)	138.5	237(258)		
171		60							
172		100							
173	Fwd cg, Heavy Weight	Hover				134	238(259)		
174		60							
175	...and Max Climb	Zero†	4.0 (13.0)						
176		60	8.4 (27.5)				239(260)		
177	...and Autorotation	60	-7.7 (-25.4)						
178	Aft cg, Heavy Weight	Hover	Zero			143			
179		60	Zero				240(261)		
180	...and Max Climb		9.7 (31.7)						
181	...and Autorotation		-7.9 (-25.9)						

* Indicates the extensive list of transfer function factors including gust numerators.

† Zero forward velocity, i.e., airspeed equal to vertical velocity.

TABLE V-3
UH-1H STABILITY AND CONTROL DERIVATIVES -- SI UNITS
(BODY-FIXED FRL AXIS SYSTEM)

CASE 119 -40 KT LEVEL FLIGHT AT SEA LEVEL 3629 KG MID CG

PHI	THETA	PSI	ALPHA	BETA	GAMMA	θMR	B1S	A1S	θTR
-0.70	3.38	0.00	-176.62	0.04	180.00	12.71	-2.98	-0.36	2.54

XDOT	ZDOT	U0	V0	W0	VT0
-20.58	0.00	-20.54	0.01	-1.21	20.58

	U	W	Q	V	P	R	DC	DB	DA	DP
X	-0.0234	0.0452	0.4580	-0.0031	-0.4160	-0.0601	0.0851	0.1378	-0.0002	0.0051
Z	0.1767	-0.6921	0.1360	-0.0113	0.1803	0.5949	-1.2490	-0.1892	-0.0043	-0.0030
M	0.0013	0.0275	-0.0564	0.0004	0.2072	0.0455	-0.0140	-0.0685	0.0002	0.0129
Y	-0.0021	-0.0217	-0.3736	-0.0479	-0.4910	0.3021	-0.0368	-0.0039	0.1049	0.2032
L'	0.0061	-0.0512	-0.7668	-0.0560	-0.9371	0.2419	-0.0605	-0.0097	0.2194	0.1670
N'	0.0251	-0.0403	0.0669	0.0861	-0.0318	-0.8473	0.0939	-0.0118	0.0335	-0.4887

CASE 120 -20 KT LEVEL FLIGHT AT SEA LEVEL 3629 KG MID CG

PHI	THETA	PSI	ALPHA	BETA	GAMMA	θMR	B1S	A1S	θTR
-0.90	2.53	0.00	-177.47	0.04	180.00	13.58	-3.23	-0.72	4.41

XDOT	ZDOT	U0	V0	W0	VT0
-10.29	0.00	-10.28	0.01	-0.46	10.29

	U	W	Q	V	P	R	DC	DB	DA	DP
X	-0.0122	0.0142	0.2947	-0.0047	-0.4173	-0.0682	0.0549	0.1280	-0.0008	0.0053
Z	0.2715	-0.4965	-0.3016	-0.0277	0.0518	0.5862	-1.1182	-0.0757	-0.0019	0.0043
M	0.0195	0.0104	-0.1062	0.0024	0.2168	0.0457	-0.0036	-0.0661	0.0005	0.0113
Y	-0.0014	-0.0171	-0.3948	-0.0389	-0.3940	0.2135	-0.0362	-0.0032	0.1033	0.1699
L'	0.0136	-0.0395	-0.8008	-0.0473	-0.7528	0.1640	-0.0526	-0.0064	0.2170	0.1415
N'	0.0342	-0.0206	0.2140	0.0627	-0.0815	-0.6211	0.1346	-0.0028	0.0343	-0.4081

CASE 121 -10 KT LEVEL FLIGHT AT SEA LEVEL 3629 KG MID CG

PHI	THETA	PSI	ALPHA	BETA	GAMMA	θMR	B1S	A1S	θTR
-1.01	3.98	0.00	-176.02	0.07	180.00	14.17	-1.77	-1.11	5.65

XDOT	ZDOT	U0	V0	W0	VT0
-5.14	0.00	-5.13	0.01	-0.36	5.14

	U	W	Q	V	P	R	DC	DB	DA	DP
X	-0.0345	0.0221	0.2577	-0.0059	-0.4201	-0.0932	0.0791	0.1283	-0.0006	0.0062
Z	0.2192	-0.3993	-0.4006	-0.0453	-0.0435	0.6401	-1.1129	-0.0300	-0.0011	0.0036
M	0.0184	-0.0110	-0.2796	0.0037	0.2253	0.0465	0.0009	-0.0664	0.0004	0.0104
Y	0.0030	-0.0122	-0.4159	-0.0418	-0.3232	0.2641	-0.0355	-0.0012	0.1049	0.1918
L'	0.0229	-0.0295	-0.9720	-0.0417	-0.6428	0.1469	-0.0475	-0.0021	0.2199	0.1626
N'	0.0304	-0.0150	0.0244	0.0695	0.1760	-0.7149	0.1585	-0.0005	0.0340	-0.4614

TABLE V-3 CONTINUED
UH-1H STABILITY AND CONTROL DERIVATIVES -- SI UNITS
(BODY-FIXED FRL AXIS SYSTEM)

CASE 122 1 KT LEVEL FLIGHT AT SEA LEVEL 3629 KG MID CG

PHI	THETA	PSI	ALPHA	BETA	GAMMA	OMR	B1S	A1S	OTR
-1.07	4.04	0.00	4.04	-0.08	0.00	14.51	-0.90	-1.60	6.44

XDOT	ZDOT	UO	VO	WO	VTO
0.51	0.00	0.51	-0.00	0.04	0.51

	U	W	Q	V	P	R	DC	DB	DA	DP
X	-0.0038	0.0250	0.1767	-0.0077	-0.4225	-0.0777	0.0817	0.1249	-0.0009	-0.0007
Z	-0.0991	-0.3850	0.0888	-0.0982	-0.1209	0.6745	-1.1729	0.0396	0.0036	0.0084
M	0.0062	-0.0124	-0.1900	0.0044	0.2342	0.0385	-0.0013	-0.0666	0.0004	0.0062
Y	0.0150	-0.0040	-0.4071	-0.0451	-0.2670	0.2678	-0.0348	0.0017	0.1061	0.1959
L'	0.0253	-0.0162	-0.8779	-0.0417	-0.5720	0.1391	-0.0443	0.0033	0.2217	0.1666
N'	-0.0058	-0.0206	-0.0597	0.0687	-0.3176	-0.7094	0.1718	-0.0004	0.0326	-0.0712

CASE 123 10 KT LEVEL FLIGHT AT SEA LEVEL 3629 KG MID CG

PHI	THETA	PSI	ALPHA	BETA	GAMMA	OMR	B1S	A1S	OTR
-0.99	3.95	0.00	3.95	-0.07	0.00	14.15	-0.68	-1.78	5.74

XDOT	ZDOT	UO	VO	WO	VTO
5.14	0.00	5.13	-0.01	0.35	5.14

	U	W	Q	V	P	R	DC	DB	DA	DP
X	-0.0036	0.0300	0.2490	-0.0056	-0.4150	-0.0795	0.0741	0.1236	-0.0007	-0.0025
Z	-0.1841	-0.4456	0.3393	-0.0512	-0.1812	0.6229	-1.1351	0.0594	0.0010	-0.0034
M	0.0062	-0.0091	-0.2695	0.0066	0.2333	0.0250	0.0027	-0.0673	0.0003	0.0001
Y	0.0189	-0.0016	-0.4157	-0.0504	-0.3341	0.2726	-0.0270	0.0027	0.1062	0.1927
L'	0.0195	-0.0116	-0.8566	-0.0396	-0.6855	0.1429	-0.0309	0.0054	0.2216	0.1625
N'	-0.0184	-0.0204	0.0274	0.0692	-0.3037	-0.7329	0.1570	0.0011	0.0318	-0.0636

CASE 124 20 KT LEVEL FLIGHT AT SEA LEVEL 3629 KG MID CG

PHI	THETA	PSI	ALPHA	BETA	GAMMA	OMR	B1S	A1S	OTR
-0.86	3.70	0.00	3.70	-0.06	0.00	13.57	-0.47	-1.79	8.59

XDOT	ZDOT	UO	VO	WO	VTO
10.29	0.00	10.27	-0.01	0.66	10.29

	U	W	Q	V	P	R	DC	DB	DA	DP
X	-0.0046	0.0180	0.1259	-0.0065	-0.4020	-0.0730	0.0676	0.1221	-0.0001	-0.0016
Z	-0.1978	-0.4467	0.3570	-0.0378	-0.2149	0.5683	-1.1151	0.1055	0.0019	0.0035
M	0.0039	-0.0029	-0.2947	0.0070	0.2266	0.0148	0.0062	-0.0692	-0.0000	-0.0015
Y	0.0111	-0.0014	-0.4074	-0.0458	-0.4091	0.2674	-0.0170	0.0049	0.1067	0.1892
L'	0.0127	-0.0100	-0.8152	-0.0397	-0.9210	0.1442	-0.0129	0.0104	0.2227	0.1610
N'	-0.0285	-0.0212	0.1048	0.0709	-0.2784	-0.7194	0.1390	0.0059	0.0126	-0.0670

TABLE V-3 CONTINUED
UH-1H STABILITY AND CONTROL DERIVATIVES -- SI UNITS
(BODY-FIXED FRL AXIS SYSTEM)

CASE 125 40 KT LEVEL FLIGHT AT SEA LEVEL 3629 KG MID CG

PHI	THETA	PSI	ALPHA	BETA	GAMMA	OMR	B1S	A1S	OTR
-0.68	4.15	0.00	4.15	-0.05	0.00	12.76	0.73	-1.63	2.71

XDOT	ZDOT	UO	VO	WO	VTO
20.58	0.00	20.52	-0.02	1.49	20.58

	U	W	Q	V	P	R	DC	DB	DA	DP
X	-0.0184	0.0545	0.4243	-0.0003	-0.3800	-0.0812	0.0841	0.1113	-0.0015	-0.0033
Z	-0.0668	-0.7689	-0.0969	-0.0262	-0.3615	0.5508	-1.2403	0.2072	0.0000	-0.0068
M	0.0083	-0.0060	-0.4184	0.0047	0.2138	0.0088	0.0072	-0.0681	0.0007	-0.0079
Y	0.0070	-0.0023	-0.3948	-0.0942	-0.5223	0.3658	-0.0090	0.0037	0.1051	0.1917
L'	0.0055	-0.0122	-0.7981	-0.0474	-1.0403	0.2255	-0.0021	0.0092	0.2193	0.1626
N'	-0.0194	-0.0381	0.0279	0.0902	-0.2508	-1.0228	0.1027	0.0120	0.0307	-0.4614

CASE 126 60 KT LEVEL FLIGHT AT SEA LEVEL 3629 KG MID CG

PHI	THETA	PSI	ALPHA	BETA	GAMMA	OMR	B1S	A1S	OTR
-0.65	3.91	0.00	3.91	-0.04	0.00	12.58	1.72	-1.50	2.10

XDOT	ZDOT	UO	VO	WO	VTO
30.87	0.00	30.79	-0.02	2.10	30.87

	U	W	Q	V	P	R	DC	DB	DA	DP
X	-0.0200	0.0665	0.4981	0.0022	-0.3545	-0.0829	0.0970	0.1003	-0.0010	-0.0067
Z	0.0123	-0.8757	-0.4929	-0.0235	-0.5291	0.5848	-1.3829	0.3382	-0.0012	-0.0046
M	0.0106	-0.0088	-0.5230	0.0030	0.2043	0.0131	0.0049	-0.0686	0.0007	-0.0054
Y	0.0010	-0.0056	-0.3787	-0.1248	-0.5765	0.4629	-0.0096	0.0060	0.1051	0.2338
L'	-0.0027	-0.0200	-0.7735	-0.0528	-1.1266	0.2915	-0.0064	0.0158	0.2194	0.1992
N'	-0.0093	-0.0490	-0.0281	0.1099	-0.1946	-1.2827	0.0826	0.0226	0.0311	-0.5625

CASE 127 80 KT LEVEL FLIGHT AT SEA LEVEL 3629 KG MID CG

PHI	THETA	PSI	ALPHA	BETA	GAMMA	OMR	B1S	A1S	OTR
-0.73	3.56	0.00	3.56	-0.05	0.00	12.81	2.95	-1.49	2.07

XDOT	ZDOT	UO	VO	WO	VTO
41.16	0.00	41.08	-0.03	2.56	41.16

	U	W	Q	V	P	R	DC	DB	DA	DP
X	-0.0340	0.0788	0.5267	0.0041	-0.3332	-0.0917	0.1161	0.0849	-0.0025	-0.0096
Z	0.0571	-0.9468	-0.8209	-0.0242	-0.7221	0.6116	-1.4986	0.4712	-0.0051	-0.0130
M	0.0131	-0.0182	-0.6126	0.0017	0.1967	0.0192	-0.0001	-0.0683	0.0008	-0.0036
Y	0.0020	-0.0115	-0.3761	-0.1518	-0.5926	0.5823	-0.0179	0.0090	0.1054	0.2692
L'	0.0012	-0.0124	-0.7824	-0.0556	-1.1435	0.3618	-0.0248	0.0227	0.2200	0.2295
N'	-0.0026	-0.0527	-0.1171	0.1212	-0.1555	-1.4941	0.0784	0.0290	0.0305	-0.6475

BEST AVAILABLE COPY

TABLE V-3 CONTINUED
UH-1H STABILITY AND CONTROL DERIVATIVES -- SI UNITS
(BODY-FIXED FRL AXIS SYSTEM)

CASE 128 100 KT LEVEL FLIGHT AT SEA LEVEL 3629 KG MID CG

PHI	THETA	PSI	ALPHA	BETA	GAMMA	OMR	B1S	A1S	OTR
-0.98	3.02	0.00	3.02	-0.05	0.00	13.42	4.46	-1.74	2.41

XDOT	ZDOT	UO	VO	WO	VTO
51.84	0.00	51.37	-0.04	2.71	51.88

	U	W	Q	V	P	R	DC	DB	DA	DP
X	-0.0451	0.0925	0.5403	0.0063	-0.3005	-0.0961	0.1368	0.0668	-0.0022	-0.0171
Z	0.0888	-0.9963	-1.0513	-0.0285	-0.9370	0.6602	-1.5753	0.6089	-0.0038	-0.0064
M	0.0166	-0.0218	-0.7012	0.0010	0.1838	0.0173	-0.0088	-0.0680	0.0006	-0.0005
Y	0.0038	-0.0195	-0.3702	-0.1815	-0.5688	0.6159	-0.0305	0.0170	0.1082	0.2980
L'	0.0059	-0.0483	-0.7883	-0.0585	-1.0889	0.3945	-0.0495	0.0392	0.2257	0.2545
N'	0.0031	-0.0085	-0.2407	0.1325	-0.1554	-1.7052	0.0828	0.0322	0.0317	-0.7158

CASE 129 120 KT LEVEL FLIGHT AT SEA LEVEL 3629 KG MID CG

PHI	THETA	PSI	ALPHA	BETA	GAMMA	OMR	B1S	A1S	OTR
-1.29	2.22	0.00	2.22	-0.05	0.00	18.46	6.23	-2.22	3.03

XDOT	ZDOT	UO	VO	WO	VTO
61.73	0.00	61.69	-0.05	2.39	61.73

	U	W	Q	V	P	R	DC	DB	DA	DP
X	-0.0565	0.1053	0.5229	0.0099	-0.2550	-0.1164	0.1611	0.0452	-0.0028	-0.0322
Z	0.1155	-1.0305	-1.2224	-0.0373	-1.1048	0.7217	-1.6352	0.7405	-0.0026	-0.0037
M	0.0199	-0.0304	-0.7778	-0.0002	0.1588	0.0199	-0.0190	-0.0683	0.0007	0.0116
Y	0.0068	-0.0307	-0.3718	-0.2096	-0.5284	0.6859	-0.0520	0.0293	0.1103	0.3262
L'	0.0117	-0.0692	-0.8030	-0.0611	-1.0047	0.4489	-0.0883	0.0629	0.2312	0.2802
N'	0.0044	-0.0354	-0.3093	0.1394	-0.1782	-1.8858	0.1107	0.0301	0.0347	-0.7818

CASE 130 130 KT LEVEL FLIGHT AT SEA LEVEL 3629 KG MID CG

PHI	THETA	PSI	ALPHA	BETA	GAMMA	OMR	B1S	A1S	OTR
-1.51	1.69	0.00	1.69	-0.04	0.00	15.15	7.21	-2.55	3.46

XDOT	ZDOT	UO	VO	WO	VTO
66.88	0.00	66.85	-0.05	1.98	66.88

	U	W	Q	V	P	R	DC	DB	DA	DP
X	-0.0622	0.1089	0.5041	0.0118	-0.2365	-0.1291	0.1707	0.0353	-0.0028	-0.0410
Z	0.1266	-1.0373	-1.3131	-0.0422	-1.1853	0.7656	-1.6602	0.8001	-0.0016	-0.0026
M	0.0215	-0.0340	-0.8135	-0.0006	0.1498	0.0229	-0.0238	-0.0699	0.0006	0.0160
Y	0.0078	-0.0366	-0.3778	-0.2234	-0.4966	0.7182	-0.0647	0.0351	0.1126	0.3349
L'	0.0133	-0.0796	-0.8205	-0.0617	-0.9195	0.4743	-0.1108	0.0757	0.2368	0.2881
N'	0.0050	-0.0407	-0.4014	0.1421	-0.1847	-1.9741	0.1329	0.0229	0.0358	-0.8018

TABLE V-3 CONTINUED
UH-1H STABILITY AND CONTROL DERIVATIVES -- SI UNITS
(BODY-FIXED FRL AXIS SYSTEM)

CASE 131 22 KT 11 M/S SEA LEVEL 3629 KG MID CG

PHI	THETA	PSI	ALPHA	BETA	GAMMA	OMR	B1S	A1S	OTR
-1.78	7.26	0.00	-82.73	1.76	90.00	16.97	2.28	-2.57	8.37

XDOT	ZDOT	UO	VO	WO	VTO
0.00	-11.06	1.40	0.38	-10.97	11.06

	U	W	Q	V	P	R	DC	DB	DA	DP
X	-0.0140	0.0645	-0.8170*	-0.0013	-0.3915	-0.1617	0.1593	0.1303	-0.0017	-0.0099
Z	0.0059	-0.5336	-1.3102	-0.0941	-0.2447	0.8477	-1.2124	0.0378	0.0070	0.0117
M	0.0113	-0.0465	-1.7509	0.0016	0.2086	0.2280	-0.0358	-0.0691	0.0007	0.0321
Y	0.0110	-0.0355	-0.5411	-0.0659	-0.1070	0.4046	-0.0598	0.0017	0.1122	0.2102
L'	0.0201	-0.0535	-0.3754	-0.0590	-0.2191	0.2495	-0.0811	0.0032	0.2346	0.1820
N'	-0.0014	0.0616	-0.3835	0.1041	-0.3248	-0.9932	0.2598	-0.0017	0.0339	-0.5047

CASE 132 60 KT 12 M/S SEA LEVEL 3629 KG MID CG

PHI	THETA	PSI	ALPHA	BETA	GAMMA	OMR	B1S	A1S	OTR
-1.62	3.10	0.00	-20.52	0.57	23.68	16.98	1.81	-3.15	6.18

XDOT	ZDOT	UO	VO	WO	VTO
28.28	-12.37	28.91	0.31	-10.82	30.87

	U	W	Q	V	P	R	DC	DB	DA	DP
X	-0.0321	0.0585	-0.1614	0.0052	-0.3599	-0.1230	0.0846	0.1194	-0.0018	-0.0199
Z	0.0295	-0.8181	-0.5243	-0.0499	-0.5480	0.9431	-1.3784	0.3070	0.0090	-0.0008
M	-0.0111	-0.0452	-0.3519	0.0107	0.1993	-0.0016	0.0090	-0.0756	0.0004	0.0065
Y	0.0069	-0.0311	-0.4515	-0.1315	-0.2052	0.5763	-0.0533	0.0131	0.1176	0.2269
L'	0.0038	-0.0519	-0.8635	-0.0811	-0.3903	0.3661	-0.0662	0.0248	0.2458	0.1965
N'	-0.0281	0.0482	0.1512	0.1284	-0.3290	-1.0687	0.2660	-0.0106	0.0339	-0.5095

CASE 133 100 KT 10 M/S SEA LEVEL 3629 KG MID CG

PHI	THETA	PSI	ALPHA	BETA	GAMMA	OMR	B1S	A1S	OTR
-1.66	0.62	0.00	-6.04	0.19	10.86	16.79	5.94	-2.98	0.87

XDOT	ZDOT	UO	VO	WO	VTO
50.52	-9.69	51.12	0.17	-5.77	51.84

	U	W	Q	V	P	R	DC	DB	DA	DP
X	-0.0516	0.0853	0.2706	0.0117	-0.2881	-0.1629	0.1507	0.0790	-0.0027	-0.0337
Z	0.1091	-0.9613	-1.2183	-0.0481	-0.9513	0.9362	-1.5265	0.5776	0.0089	-0.0011
M	0.0203	-0.0285	-0.6133	0.0005	0.1728	0.0419	-0.0187	-0.0759	0.0006	0.0165
Y	0.0088	-0.0375	-0.4262	-0.1897	-0.3329	0.6765	-0.0653	0.0285	0.1223	0.2842
L'	0.0115	-0.0788	-0.8958	-0.0876	-0.6265	0.4635	-0.0962	0.0556	0.2548	0.2462
N'	-0.0183	0.0238	-0.2488	0.1359	-0.2176	-1.0083	0.2175	-0.0127	0.0350	-0.6807

*This derivative was transcribed accurately from the original source but exceeds the usual range of values and should be used with due caution.

TABLE V-3 CONTINUED
UH-1H STABILITY AND CONTROL DERIVATIVES -- SI UNITS
(BODY-FIXED FRL AXIS SYSTEM)

CASE 134 60 KT -8 M/S SEA LEVEL 3629 KG MID CG

PHI	THETA	PSI	ALPHA	BETA	GAMMA	ORR	B1S	A1S	OTR
-0.01	3.14	0.00	18.37	-0.00	-15.23	9.64	0.09	-0.51	0.07

XDOT	ZDOT	UO	VO	WO	VTO
29.78	8.11	29.29	-0.00	9.73	30.87

	U	W	Q	V	P	R	DC	DB	DA	DP
X	-0.0179	0.0569	0.7619	0.0001	-0.3628	-0.0501	0.0658	0.1015	-0.0007	-0.0015
Z	-0.0201	-0.8066	-8.5012	-0.0076	-0.3814	0.3641	-1.3354	0.3098	0.0013	0.0063
M	0.0189	-0.0485	-0.6268	-0.0011	0.2055	0.0197	0.0175	-0.0668	0.0003	-0.0009
Y	-0.0033	0.0107	-0.3517	-0.1165	-0.7969	0.8420	0.0180	0.0016	0.0991	0.2458
L'	-0.0063	0.0071	-0.6970	-0.0598	-1.5385	0.2651	0.0327	0.0101	0.2073	0.2083
N'	0.0015	-0.0933	0.1372	0.1100	-0.0801	-1.2678	-0.0261	0.0427	0.0305	-0.5916

CASE 135 100 KT -15 M/S SEA LEVEL 3629 KG MID CG

PHI	THETA	PSI	ALPHA	BETA	GAMMA	ORR	B1S	A1S	OTR
0.22	1.34	0.00	18.26	0.07	-16.91	7.67	-0.08	0.10	-0.32

XDOT	ZDOT	UO	VO	WO	VTO
49.22	16.97	48.85	0.06	16.12	51.44

	U	W	Q	V	P	R	DC	DB	DA	DP
X	-0.0295	0.0613	0.9717	0.0008	-0.3483	-0.0115	0.0519	0.0811	-0.0019	0.0009
Z	0.0163	-0.8916	-1.1721	0.0019	-0.5882	0.2378	-1.4981	0.5348	-0.0012	-0.0016
M	0.0226	-0.0706	-0.8871	-0.0028	0.2041	0.0052	0.0310	-0.0675	0.0005	-0.0030
Y	-0.0029	0.0186	-0.3326	-0.1660	-0.9247	0.5702	0.0245	-0.0051	0.0900	0.3187
L'	-0.0018	0.0079	-0.6553	-0.0670	-1.7880	0.3306	0.0260	0.0039	0.1876	0.2697
N'	0.0192	-0.1387	0.1548	0.1305	0.0076	-1.6585	-0.1518	0.0943	0.0268	-0.7670

CASE 136 6 KT -3 M/S SEA LEVEL 3629 KG MID CG

PHI	THETA	PSI	ALPHA	BETA	GAMMA	ORR	B1S	A1S	OTR
-0.90	3.56	0.00	93.56	-0.90	-90.00	13.99	-1.05	-1.33	5.56

XDOT	ZDOT	UO	VO	WO	VTO
0.00	3.05	-0.19	-0.05	3.04	3.05

	U	W	Q	V	P	R	DC	DB	DA	DP
X	-0.0098	0.0189	0.2784	-0.0135	-0.8270	-0.0848	0.0713	0.1240	-0.0006	0.0016
Z	-0.0845	-0.3317	-0.0049	-0.1021	-0.0994	0.6357	-1.1731	0.0327	0.0018	0.0020
M	0.0117	-0.0137	-0.2929	0.0039	0.2355	0.0369	0.0023	-0.0660	0.0003	0.0000
Y	0.0176	0.0036	-0.3496	-0.0438	-0.3127	0.2591	-0.0289	0.0017	0.1051	0.1920
L'	0.0277	-0.0062	-0.8021	-0.0405	-0.4749	0.1332	-0.0352	0.0029	0.2196	0.1621
N'	-0.0051	-0.0174	-0.1137	0.0688	-0.2295	-0.7042	0.1562	-0.0015	0.0315	-0.4621

TABLE V-3 CONTINUED
UH-1H STABILITY AND CONTROL DERIVATIVES -- SI UNITS
(BODY-FIXED FRL AXIS SYSTEM)

CASE 137 12 KT -6 M/S SEA LEVEL 3629 KG MID CG

PHI	THETA	PSI	ALPHA	BETA	GAMMA	OMR	B1S	A1S	OTR
-0.75	3.07	0.00	93.07	-0.74	-90.00	13.52	-1.93	-1.13	6.58

XDOT	ZDOT	UO	VO	WO	VTO
0.00	6.10	-0.31	-0.08	4.09	6.10

	U	V	Q	W	P	R	DC	DB	DA	DP
X	-0.0065	0.0140	0.2965	-0.0138	-0.4319	-0.0731	0.0606	0.1230	-0.0005	0.0031
Z	-0.1137	-0.2920	0.0557	-0.1012	-0.0693	0.6082	-1.1671	0.0321	-0.0006	-0.0044
M	0.0124	-0.0130	-0.3080	0.0058	0.2361	0.0406	0.0062	-0.0656	0.0003	-0.0051
Y	0.0173	0.0076	-0.3226	-0.0425	-0.3710	0.2276	-0.0238	0.0021	0.1045	0.1918
L'	0.0303	-0.0000	-0.7647	-0.0390	-0.7306	0.1103	-0.0273	0.0031	0.2176	0.1615
N'	-0.0000	-0.0423	-0.0904	0.0711	-0.1688	-0.6275	0.1397	-0.0026	0.0304	-0.4619

CASE 138 6 KT 3 M/S SEA LEVEL 3629 KG MID CG

PHI	THETA	PSI	ALPHA	BETA	GAMMA	OMR	B1S	A1S	OTR
-1.25	4.68	0.00	-85.31	1.25	90.00	15.13	-0.32	-1.82	7.08

XDOT	ZDOT	UO	VO	WO	VTO
0.00	-3.05	0.25	0.07	-3.04	3.05

	U	V	Q	W	P	R	DC	DB	DA	DP
X	-0.0132	0.0326	0.1927	-0.0110	-0.4149	-0.0970	0.0970	0.1262	-0.0009	-0.0027
Z	-0.0377	-0.4181	-0.0881	-0.1002	-0.1605	0.7095	-1.1771	0.0324	0.0026	0.0061
M	0.0091	-0.0216	-0.2849	0.0022	0.2329	0.0360	-0.0074	-0.0671	0.0004	0.0140
Y	0.0124	-0.0204	-0.5229	-0.0505	-0.2335	0.2933	-0.0407	0.0016	0.1075	0.1988
L'	0.0234	-0.0325	-0.9826	-0.0467	-0.4886	0.1602	-0.0531	0.0031	0.2246	0.1698
N'	0.0005	0.0193	0.0976	0.0780	-0.3023	-0.7611	0.1922	-0.0010	0.0329	-0.4779

CASE 139 12 KT 6 M/S SEA LEVEL 3629 KG MID CG

PHI	THETA	PSI	ALPHA	BETA	GAMMA	OMR	B1S	A1S	OTR
-1.44	5.50	0.00	-84.50	1.43	90.00	15.78	0.50	-2.09	7.53

XDOT	ZDOT	UO	VO	WO	VTO
0.00	-6.10	0.58	0.15	-6.07	6.10

	U	V	Q	W	P	R	DC	DB	DA	DP
X	-0.0157	0.0427	0.1614	-0.0135	-0.4073	-0.1176	0.1164	0.1276	-0.0010	-0.0053
Z	-0.0203	-0.8615	-0.1078	-0.0999	-0.1902	0.7588	-1.1896	0.0340	0.0042	0.0089
M	0.0094	-0.0311	-0.2982	0.0013	0.2221	0.0388	-0.0157	-0.0679	0.0004	0.0207
Y	0.0120	-0.0243	-0.5377	-0.0557	-0.1931	0.1305	-0.0478	0.0016	0.1092	0.2032
L'	0.0215	-0.0406	-1.0160	-0.0519	-0.4952	0.1937	-0.0631	0.0026	0.2282	0.1748
N'	-0.0004	0.0150	-0.0015	0.0815	-0.2987	-0.8180	0.2151	-0.0011	0.0336	-0.4881

MICROFILMED FROM
BEST AVAILABLE COPY

TABLE V-3 CONTINUED
UH-1H STABILITY AND CONTROL DERIVATIVES -- SI UNITS
(BODY-FIXED FRL AXIS SYSTEM)

CASE 140 60 KT 6 M/S SEA LEVEL 3629 KG MID CG

PHI	THETA	PSI	ALPHA	BETA	GAMMA	QSS	BIS	AIS	QTS
-3.85	4.60	-1.13	-6.78	1.21	11.39	14.72	2.57	-2.30	4.12

XDOT	ZDOT	UO	VO	WO	VTO
30.26	-6.10	30.64	0.65	-3.64	30.87

	U	W	Q	V	P	R	DC	DB	DA	DP
X	-0.0255	0.0754	0.3663	0.0065	-0.3489	-0.1123	0.1069	0.1060	-0.0023	-0.0112
Z	0.0291	-0.8658	-0.5662	-0.0376	-0.5742	0.7489	-1.3841	0.3295	0.0061	-0.0096
M	0.0116	-0.0186	-0.4903	0.0039	0.1990	0.0051	0.0021	-0.0720	0.0006	-0.0063
Y	0.0039	-0.0172	-0.4030	-0.1310	-0.4080	0.5034	-0.0322	0.0101	0.1117	0.2305
L'	0.0017	-0.0391	-0.8304	-0.0437	-0.7994	0.3247	-0.0381	0.0212	0.2333	0.1967
N'	-0.0198	-0.0052	-0.0836	0.1143	-0.2767	-1.3486	0.1603	0.0057	0.0328	-0.5544

CASE 141 60 KT 3 M/S SEA LEVEL 3629 KG MID CG

PHI	THETA	PSI	ALPHA	BETA	GAMMA	QSS	BIS	AIS	QTS
-0.89	4.20	0.00	-1.47	0.02	5.67	13.65	2.09	-1.90	2.98

XDOT	ZDOT	UO	VO	WO	VTO
30.72	-3.05	30.86	0.01	-0.79	30.87

	U	W	Q	V	P	R	DC	DB	DA	DP
X	-0.0262	0.0656	0.3898	0.0030	-0.3552	-0.0976	0.1030	0.1022	-0.0019	-0.0092
Z	0.0199	-0.8727	-0.5242	-0.0296	-0.5494	0.6695	-1.3847	0.3358	-0.0004	-0.0067
M	0.0115	-0.0109	-0.4883	0.0037	0.2046	0.0105	0.0035	-0.0700	0.0007	-0.0051
Y	0.0029	-0.0114	-0.3909	-0.1273	-0.4907	0.4796	-0.0195	0.0078	0.1083	0.2315
L'	-0.0010	-0.0283	-0.7929	-0.0477	-0.9569	0.3076	-0.0197	0.0180	0.2261	0.1976
N'	-0.0143	-0.0266	-0.0311	0.1116	-0.2212	-1.3072	0.1265	0.0138	0.0318	-0.5569

CASE 142 60 KT -3 M/S SEA LEVEL 3629 KG MID CG

PHI	THETA	PSI	ALPHA	BETA	GAMMA	QSS	BIS	AIS	QTS
-0.32	3.70	-0.40	9.17	0.35	-5.67	11.48	1.31	-1.09	1.38

XDOT	ZDOT	UO	VO	WO	VTO
30.72	3.05	30.85	0.19	5.02	30.87

	U	W	Q	V	P	R	DC	DB	DA	DP
X	-0.0225	0.0679	0.5977	0.0022	-0.3411	-0.0702	0.0899	0.0985	-0.0020	-0.0033
Z	0.0046	-0.9611	-0.5040	-0.0178	-0.4734	0.4974	-1.3724	0.3306	0.0000	-0.0051
M	0.0096	-0.0090	-0.5577	0.0023	0.2066	0.0167	0.0070	-0.0669	0.0008	-0.0052
Y	-0.0015	0.0021	-0.3709	-0.1228	-0.6600	0.4491	0.0011	0.0027	0.1017	0.2372
L'	-0.0046	-0.0076	-0.7549	-0.0569	-1.2487	0.2756	0.0091	0.0102	0.2124	0.2016
N'	-0.0045	-0.0481	-0.0091	0.1039	-0.1481	-1.2678	0.0404	0.0391	0.0305	-0.5709

TABLE V-3 CONTINUED
UH-1H STABILITY AND CONTROL DERIVATIVES -- SI UNITS
(BODY-FIXED FRL AXIS SYSTEM)

CASE 143 60 KT -6 M/S SEA LEVEL 3629 KG MID CG

PHI	THETA	PSI	ALPHA	BETA	GAMMA	OMB	B1S	A1S	OTR
-0.17	3.51	0.00	14.92	-0.04	-11.39	10.37	0.79	-0.76	0.51

XDOT	ZDOT	DD	PD	QD	VTO
30.26	6.10	29.83	-0.02	7.95	30.87

	U	W	Q	V	P	R	DC	DB	DA	DP
X	-0.0203	0.0672	3.6987	0.0007	-0.3646	-0.0571	0.0607	0.0988	-0.0016	-0.0021
Z	-0.0057	-0.9364	-0.5231	-0.0118	-0.4230	0.4176	-1.3511	0.3179	-0.3003	0.0011
M	0.0086	-0.0200	-0.5973	0.0016	0.2078	0.0197	0.0104	-0.0659	0.0006	-0.0028
Y	-0.0026	0.0077	-0.3633	-0.1213	-0.7363	0.4928	0.0114	0.0015	0.0997	0.2413
L'	-0.0061	0.0022	-0.7367	-0.0596	-1.4369	0.2693	0.0234	0.0088	0.2084	0.2049
N'	-0.0003	-0.0041	0.0371	0.1090	-0.1088	-1.2603	-0.0001	0.0375	0.0302	-0.5807

CASE 144 0 KT LEVEL FLIGHT 3048 M 3629 KG MID CG

PHI	THETA	PSI	ALPHA	BETA	GAMMA	OMB	B1S	A1S	OTR
-1.22	6.12	0.00	6.12	-0.09	0.00	16.10	-0.89	-1.74	0.54

XDOT	ZDOT	DD	PD	QD	VTO
0.00	0.00	0.00	0.00	0.00	0.00

	U	W	Q	V	P	R	DC	DB	DA	DP
X	-0.0150	0.0178	0.3797	-0.0016	-0.3976	-0.0797	0.0643	0.1282	-0.0006	-0.0002
Z	-0.0395	-0.2859	0.0390	-0.0711	-0.0662	0.6850	-0.9008	0.0299	0.0010	0.0021
M	0.0091	-0.0164	-0.3361	-0.0031	0.2125	0.0365	-0.0019	-0.0681	0.0003	0.0069
Y	0.0159	-0.0046	-0.3665	-0.0280	-0.3830	0.2098	-0.0300	0.0012	0.1085	0.1567
L'	0.0311	-0.0145	-0.7510	-0.0135	-0.9090	0.0838	-0.0343	0.0025	0.2269	0.1336
N'	0.0020	-0.0144	0.0016	0.0621	-0.3646	-0.6399	0.1724	-0.0001	0.0340	-0.3770

CASE 145 60 KT LEVEL FLIGHT 3048 M 3629 KG MID CG

PHI	THETA	PSI	ALPHA	BETA	GAMMA	OMB	B1S	A1S	OTR
-0.71	3.98	0.00	3.98	-0.05	0.00	13.95	2.00	-1.78	3.09

XDOT	ZDOT	DD	PD	QD	VTO
30.87	0.00	30.79	-0.03	2.14	30.87

	U	W	Q	V	P	R	DC	DB	DA	DP
X	-0.0230	0.0382	0.6653	-0.0032	-0.3724	-0.0747	0.0514	0.1124	-0.0016	-0.0073
Z	-0.0085	-0.6122	-0.5647	-0.0195	-0.3433	0.5919	-0.9840	0.2436	0.0012	-0.0041
M	0.0110	-0.0128	-0.5282	0.0042	0.2036	0.0355	0.0125	-0.0708	0.0006	-0.0055
Y	0.0081	-0.0028	-0.3545	-0.0978	-0.6912	0.3749	-0.0054	0.0056	0.1066	0.1728
L'	-0.0051	-0.0128	-0.7089	-0.0562	-1.4041	0.1439	0.0049	0.0141	0.2226	0.1449
N'	-0.0104	-0.0194	0.1157	0.0793	-0.3541	-1.0220	[illegible]	0.0197	0.0319	-0.4156

TABLE V-3 CONTINUED
UH-1H STABILITY AND CONTROL DERIVATIVES -- SI UNITS
(BODY-FIXED FRL AXIS SYSTEM)

CASE 146 100 KT LEVEL FLIGHT 3048 M 3629 KG MID CG

PHI	THETA	PSI	ALPHA	BETA	GAMMA	OMB	B1S	A1S	OTR
-0.97	3.28	0.00	3.28	-0.06	0.00	14.61	4.72	-1.87	3.33

XDOT	ZDOT	DD	YD	WD	VTO
51.44	0.00	51.36	-0.05	2.94	51.44

	U	W	Q	V	P	R	DC	DB	DA	DP
X	-0.0373	0.0463	0.7430	0.0041	-0.3365	-0.0913	0.0598	0.0963	-0.0022	-0.0209
Z	0.0548	-0.6733	-1.2155	-0.0201	-0.5456	0.6349	-1.0679	0.4209	-0.0003	-0.0022
M	0.0148	-0.0075	-0.6820	0.0018	0.1843	0.0177	0.0134	-0.0743	0.0007	0.0091
Y	0.0030	-0.0129	-0.3472	-0.1398	-0.6745	0.4422	-0.0222	0.0136	0.1088	0.2227
L'	0.0036	-0.0334	-0.7113	-0.0558	-1.3528	0.2452	-0.0307	0.0319	0.2267	0.1914
N'	0.0001	-0.0393	-0.0502	0.0951	-0.2899	-1.3524	0.0953	0.0297	0.0317	-0.5338

CASE 147 20 KT 10 M/S 3048 M 3619 KG MID CG

PHI	THETA	PSI	ALPHA	BETA	GAMMA	OMB	B1S	A1S	OTR
-1.86	6.62	0.00	-83.38	1.84	90.00	18.29	1.66	-2.65	11.04

XDOT	ZDOT	DD	YD	WD	VTO
0.00	-10.12	1.17	0.33	-10.05	10.12

	U	W	Q	V	P	R	DC	DB	DA	DP
X	-0.0206	0.0627	0.1664	-0.0101	-0.4038	-0.1408	0.1070	0.1297	-0.0026	-0.0110
Z	-0.0014	-0.3783	-0.0237	-0.0731	-0.2041	0.8179	-0.8880	0.0418	0.0122	0.0318
M	0.0116	-0.0378	-0.3335	0.0021	0.2106	0.0517	-0.0211	-0.0693	0.0014	0.0309
Y	0.0130	-0.0249	-0.5176	-0.0563	-0.2196	0.3870	-0.0459	0.0029	0.1132	0.1641
L'	0.0237	-0.0388	-1.0257	-0.0577	-0.4795	0.1701	-0.0563	0.0059	0.2366	0.1436
N'	0.0000	0.0392	-0.2456	0.0762	-0.4186	-0.8528	0.2384	-0.0009	0.0339	-0.2930

CASE 148 60 KT 31 M/S 3048 M 3629 KG MID CG

PHI	THETA	PSI	ALPHA	BETA	GAMMA	OMB	B1S	A1S	OTR
-1.65	2.72	0.00	-17.92	0.51	20.64	17.83	1.63	-3.29	8.55

XDOT	ZDOT	DD	YD	WD	VTO
28.88	-10.88	29.37	0.27	-9.50	30.87

	U	W	Q	V	P	R	DC	DB	DA	DP
X	-0.0301	0.0324	0.3200	0.0027	-0.3640	-0.0944	0.0406	0.1259	-0.0020	-0.0184
Z	0.0020	-0.5788	-0.7281	-0.0362	-0.3906	0.7919	-0.9469	0.2227	0.0069	-0.0057
M	0.0017	-0.0115	-0.3679	0.0081	0.1878	-0.0148	0.0155	-0.0756	0.0006	0.0027
Y	0.0049	-0.0195	-0.4282	-0.1064	-0.2981	0.4045	-0.0358	0.0099	0.1156	0.1608
L'	-0.0001	-0.0136	-0.8189	-0.0406	-0.6104	0.2275	-0.0335	0.0191	0.2414	0.1341
N'	-0.0231	0.0184	0.1870	0.0361	-0.4710	-1.1710	0.2466	-0.0047	0.0332	-0.3856

TABLE V-3 CONTINUED
UH-1H STABILITY AND CONTROL DERIVATIVES -- SI UNITS
(BODY-FIXED FRL AXIS SYSTEM)

CASE 149 60 KT -0 M/S 3048 M 3629 KG MID CG

PHI	THETA	PSI	ALPHA	BETA	GAMMA	ORB	B1S	A1S	QTB
-0.03	3.38	0.00	18.66	-0.01	-15.29	11.09	0.63	-0.80	0.16

XDOT	ZDOT	UO	VO	WO	VTO
29.77	0.14	29.24	-0.01	5.88	30.87

	U	W	Q	V	P	R	DC	DB	DA	DP
X	-0.0168	0.0340	0.8737	-0.0020	-0.3620	-0.0499	0.0373	0.1120	-0.0098	-0.0012
Z	-0.0350	-0.5680	-0.5680	-0.0088	-0.2671	0.4509	-0.9608	0.2200	0.0035	0.0066
M	0.0142	-0.0349	-0.6159	0.0005	0.2021	0.0167	0.0183	-0.0687	0.0003	-0.0006
Y	-0.0040	0.0088	-0.3374	-0.0981	-0.8745	0.3102	0.0164	0.0024	0.1032	0.1822
L'	-0.0084	0.0068	-0.6555	-0.0528	-1.7581	0.1512	0.0365	0.0102	0.2159	0.1585
N'	-0.0014	-0.0701	0.2162	0.0811	-0.2322	-0.9959	0.0193	0.0336	0.0322	-0.4385

CASE 150 100 KT -14 M/S 3048 M 3629 KG MID CG

PHI	THETA	PSI	ALPHA	BETA	GAMMA	ORB	B1S	A1S	QTB
0.23	2.05	0.00	18.22	0.07	-16.17	9.04	1.12	-0.09	-0.54

XDOT	ZDOT	UO	VO	WO	VTO
49.61	10.33	48.87	0.06	16.08	51.44

	U	W	Q	V	P	R	DC	DB	DA	DP
X	-0.0263	0.0378	1.0714	-0.0002	-0.3533	-0.0281	0.0238	0.0950	-0.0020	0.0026
Z	0.0097	-0.6167	-1.1209	-0.0008	-0.3963	0.3691	-1.0773	0.3801	-0.0008	-0.0077
M	0.0187	-0.0493	-0.8305	-0.0015	0.2014	0.0104	0.0292	-0.0690	0.0009	-0.0031
Y	-0.0028	0.0100	-0.3349	-0.1273	-0.9997	0.3989	0.0156	-0.0040	0.0965	0.2363
L'	-0.0021	0.0046	-0.6488	-0.0588	-1.9826	0.1856	0.0193	0.0023	0.1969	0.2004
N'	0.0153	-0.1002	0.2285	0.0950	-0.1069	-1.2729	-0.0778	0.0700	0.0271	-0.5690

CASE 151 1 KT LEVEL FLIGHT AT SEA LEVEL 3629 KG FWD CG

PHI	THETA	PSI	ALPHA	BETA	GAMMA	ORB	B1S	A1S	QTB
-1.06	-0.72	0.00	-0.72	0.01	0.00	14.49	-5.55	-1.55	6.80

XDOT	ZDOT	UO	VO	WO	VTO
0.51	0.00	0.51	0.00	-0.01	0.51

	U	W	Q	V	P	R	DC	DB	DA	DP
X	-0.0131	-0.0961	0.1934	-0.0155	-0.4309	-0.0360	-0.0207	0.1284	-0.0005	-0.0001
Z	-0.1556	-0.3906	0.1184	-0.0951	-0.0478	0.6703	-1.1822	0.0363	0.0008	0.0002
M	0.0064	-0.0130	-0.2647	0.0045	0.2137	0.0248	0.0011	-0.0669	0.0003	0.0060
Y	0.0137	-0.0040	-0.4050	-0.0449	-0.2495	0.2747	-0.0351	0.0020	0.1058	0.1956
L'	0.0220	-0.0160	-0.7328	-0.0601	-0.5732	0.1192	-0.0437	0.0017	0.2186	0.1615
N'	-0.0072	-0.0287	0.4045	0.0701	-0.3111	-0.7149	0.1761	-0.0011	0.0248	-0.4813

TABLE V-3 CONTINUED
UH-1H STABILITY AND CONTROL DERIVATIVES -- SI UNITS
(BODY-FIXED FRL AXIS SYSTEM)

CASE 152 60 KT LEVEL FLIGHT AT SEA LEVEL 3629 KG FWD CG

PHI	THETA	PSI	ALPHA	BETA	GAMMA	OMR	B1S	A1S	OTR
-0.61	-0.47	0.00	-0.47	0.01	0.00	12.63	-2.57	-1.42	2.05

XDOT	ZDOT	UO	VO	WO	VTO
30.87	0.00	30.87	0.00	-0.25	30.87

	U	W	Q	V	P	R	DC	DB	DA	DP
X	-0.0242	-0.0001	0.4619	0.0004	-0.3976	-0.0276	-0.0136	0.1284	-0.0017	-0.0068
Z	-0.0485	-0.8792	-0.5537	-0.0217	-0.4453	0.6350	-1.3916	0.3359	-0.0006	-0.0048
M	0.0118	-0.0139	-0.5528	0.0028	0.2045	0.0099	0.0038	-0.0673	0.0006	-0.0041
Y	0.0003	-0.0053	-0.3821	-0.1260	-0.5795	0.4827	-0.0092	0.0057	0.1065	0.2333
L'	-0.0045	-0.0190	-0.6470	-0.0433	-1.1195	0.2891	-0.0053	0.0151	0.2200	0.1940
N'	-0.0126	-0.0490	0.7753	0.1195	-0.1646	-1.3472	0.0836	0.0228	0.0254	-0.5782

CASE 153 100 KT LEVEL FLIGHT AT SEA LEVEL 3629 KG FWD CG

PHI	THETA	PSI	ALPHA	BETA	GAMMA	OMR	B1S	A1S	OTR
-0.89	-0.77	0.00	-0.77	0.01	0.00	13.57	0.78	-1.64	2.40

XDOT	ZDOT	UO	VO	WO	VTO
51.44	0.00	51.44	0.01	-0.69	51.44

	U	W	Q	V	P	R	DC	DB	DA	DP
X	-0.0383	0.0267	0.4897	0.0043	-0.3698	-0.0455	0.0269	0.1132	-0.0023	-0.0171
Z	0.0375	-1.0009	-1.1327	-0.0267	-0.8208	0.7428	-1.5768	0.6061	-0.0020	-0.0058
M	0.0189	-0.0332	-0.7558	0.0007	0.1808	0.0212	-0.0185	-0.0625	0.0005	0.0015
Y	0.0022	-0.0187	-0.3753	-0.1833	-0.5788	0.6420	-0.0288	0.0160	0.1123	0.2973
L'	0.0023	-0.0865	-0.6833	-0.0457	-1.0959	0.3915	-0.0448	0.0372	0.2316	0.2479
N'	0.0002	-0.0496	0.4489	0.1463	-0.1252	-1.7941	0.0867	0.0327	0.0265	-0.7304

CASE 154 1 KT LEVEL FLIGHT AT SEA LEVEL 3629 KG AFT CG

PHI	THETA	PSI	ALPHA	BETA	GAMMA	OMR	B1S	A1S	OTR
-1.38	8.79	0.00	8.78	-0.17	0.00	14.51	3.74	-1.66	6.49

XDOT	ZDOT	UO	VO	WO	VTO
0.51	0.00	0.51	-0.00	0.08	0.51

	U	W	Q	V	P	R	DC	DB	DA	DP
X	-0.0032	0.0551	0.1806	-0.0491	-0.4007	-0.1543	0.1836	0.1238	-0.0010	-0.0007
Z	-0.0431	-0.3761	0.0482	0.0224	-0.2092	0.6487	-1.1649	0.0356	0.0017	0.0027
M	0.0037	-0.0144	-0.2574	0.1762	0.2186	0.0410	-0.0039	-0.0674	0.0004	0.0061
Y	0.0165	-0.0038	-0.4102	-0.0638	-0.2711	0.2598	-0.0145	0.0015	0.1062	0.1965
L'	0.0289	-0.0159	-1.0213	0.0575*	-0.5858	0.1380	-0.0445	0.0028	0.2282	0.1714
N'	-0.0035	-0.0208	-0.9258	0.1205	-0.1269	-0.6850	0.1700	-0.0009	0.0342	-0.4620

*This derivative was transcribed accurately from the original source but exceeds the usual range of values and should be used with due caution.

TABLE V-3 CONTINUED
UH-1H STABILITY AND CONTROL DERIVATIVES -- SI UNITS
(BODY-FIXED FRL AXIS SYSTEM)

CASE 155 60 KT LEVEL FLIGHT AT SEA LEVEL 3629 KG APT CG

PHI	THETA	PSI	ALPHA	BETA	GAMMA	OMR	B1S	A1S	OTR
-0.69	6.20	0.00	6.20	-0.10	0.00	12.52	6.30	-1.59	2.17

XDOT	ZDOT	UO	VO	WO	VTO
30.87	0.00	30.55	-0.05	6.40	30.87

	U	W	Q	V	P	R	DC	DB	DA	DP
X	-0.0343	0.1321	0.5292	0.0043	-0.3009	-0.1297	0.2068	0.0728	-0.0018	-0.0067
Z	0.0692	-0.8647	-0.4443	-0.0253	-0.6078	0.5281	-1.3700	0.3406	-0.0018	-0.0048
M	0.0090	-0.0050	-0.5006	0.0031	0.2054	0.0168	0.0057	-0.0704	0.0008	-0.0066
Y	0.0021	-0.0061	-0.3744	-0.1238	-0.5766	0.4446	-0.0104	0.0066	0.1032	0.2343
L'	-0.0002	-0.0214	-0.8978	-0.0610	-1.1412	0.2920	-0.0584	0.0170	0.2180	0.2082
N'	-0.0057	-0.0489	-0.8290	0.1004	-0.2299	-1.2229	0.0816	0.0226	0.0368	-0.5507

CASE 156 100 KT LEVEL FLIGHT AT SEA LEVEL 3629 KG APT CG

PHI	THETA	PSI	ALPHA	BETA	GAMMA	OMR	B1S	A1S	OTR
-1.02	6.69	0.00	6.69	-0.12	0.00	13.33	8.17	-1.88	2.48

XDOT	ZDOT	UO	VO	WO	VTO
51.44	0.00	51.09	-0.11	5.99	51.44

	U	W	Q	V	P	R	DC	DB	DA	DP
X	-0.0601	0.1580	0.5794	0.0089	-0.2168	-0.1356	0.2489	0.0195	-0.0010	-0.0179
Z	0.1402	-0.9843	-0.9728	-0.0308	-0.9696	0.5760	-1.5655	0.6116	-0.0045	-0.0058
M	0.0134	-0.0126	-0.6556	0.0012	0.1858	0.0146	-0.0003	-0.0735	0.0007	-0.0021
Y	0.0061	-0.0210	-0.3667	-0.1800	-0.5546	0.5914	-0.0134	0.0188	0.1042	0.2987
L'	0.0105	-0.0513	-0.8974	-0.0703	-1.0767	0.3934	-0.0565	0.0429	0.2195	0.2613
N'	0.0053	-0.0464	-0.9365	0.1187	-0.1938	-1.6241	0.0799	0.0316	0.0364	-0.7011

CASE 157 1 KT LEVEL FLIGHT AT SEA LEVEL 2948 KG MID CG

PHI	THETA	PSI	ALPHA	BETA	GAMMA	OMR	B1S	A1S	OTR
-1.07	4.24	0.00	4.24	-0.08	0.00	13.62	-0.72	-1.50	5.45

XDOT	ZDOT	UO	VO	WO	VTO
0.51	0.00	0.51	-0.00	0.04	0.51

	U	W	Q	V	P	R	DC	DB	DA	DP
X	0.0001	0.0119	0.1390	-0.0151	-0.4766	-0.4060	0.1016	0.1234	-0.0007	-0.0002
Z	-0.1238	-0.4594	0.0822	-0.1376	-0.1466	0.2015	-1.3886	0.0359	0.0010	0.0008
M	0.0029	-0.0137	-0.2089	-0.0150	0.2182	-0.5023*	-0.0012	-0.0517	0.0003	0.0051
Y	0.0166	-0.0519	-0.4550	-0.0452	-0.1891	0.3125	-0.0380	0.0020	0.1051	0.2352
L'	0.0192	-0.0164	-0.4656	-0.0411	-0.4111	-0.1297*	-0.0384	0.0010	0.1905	0.1476
N'	-0.0067	-0.0216	-0.1061	0.0619	-0.1819	-0.6865	0.1509	-0.0012	0.0287	-0.4896

*This derivative was transcribed accurately from the original source but exceeds the usual range of values and should be used with due caution.

TABLE V-3 CONTINUED
UH-1H STABILITY AND CONTROL DERIVATIVES -- SI UNITS
(BODY-FIXED FRL AXIS SYSTEM)

CASE 158 60 KT LEVEL FLIGHT AT SEA LEVEL 2948 KG MID CG

PHI	THETA	PSI	ALPHA	BETA	GAMMA	ORR	B1S	A1S	OTR
-0.72	3.97	0.00	3.97	-0.05	0.00	11.86	1.88	-1.42	1.82

XDOT	ZDOT	UO	VO	WO	VTO
30.87	0.00	30.79	-0.03	2.14	30.87

	U	W	Q	V	P	R	DC	DB	DA	DP
X	-0.0290	0.0945	0.5024	0.0041	-0.3981	-0.0873	0.1426	0.0886	-0.0007	-0.0078
Z	0.0382	-1.0862	-0.6576	-0.0271	-0.6393	0.5758	-1.7075	0.8166	0.0032	-0.0015
M	0.0093	-0.0125	-0.4831	0.0022	0.1892	0.0134	-0.0029	-0.0543	0.0002	-0.0049
Y	0.0021	-0.0092	-0.4397	-0.1503	-0.5813	0.5791	-0.0145	0.0077	0.1057	0.2889
L'	-0.0006	-0.0253	-0.8033	-0.0372	-0.9716	0.2618	-0.0121	0.0178	0.1920	0.1824
N'	-0.0062	-0.0433	-0.1668	0.1193	-0.1677	-1.3532	0.0695	0.0205	0.0299	-0.6011

CASE 159 100 KT LEVEL FLIGHT AT SEA LEVEL 2948 KG MID CG

PHI	THETA	PSI	ALPHA	BETA	GAMMA	ORR	B1S	A1S	OTR
-1.14	2.81	0.00	2.81	-0.06	0.00	12.96	4.83	-1.86	2.26

XDOT	ZDOT	UO	VO	WO	VTO
51.44	0.00	51.38	-0.05	2.53	51.44

	U	W	Q	V	P	R	DC	DB	DA	DP
X	-0.0564	0.1363	0.5271	0.0090	-0.3135	-0.1051	0.2119	0.0374	-0.0023	-0.0198
Z	0.1276	-1.2349	-1.3186	-0.0374	-1.1189	0.6840	-1.9483	0.7504	-0.0051	-0.0072
M	0.0159	-0.0300	-0.6601	0.0005	0.1613	0.0158	-0.0248	-0.0507	0.0005	-0.0010
Y	0.0060	-0.0283	-0.4413	-0.2205	-0.5517	0.7705	-0.0456	0.0232	0.1084	0.3674
L'	0.0088	-0.0573	-0.8635	-0.0377	-0.9015	0.3514	-0.0640	0.0447	0.1964	0.2329
N'	0.0081	-0.0342	-0.4768	0.1442	-0.1560	-1.8071	0.0865	0.0224	0.0294	-0.7637

CASE 160 1 KT LEVEL FLIGHT AT SEA LEVEL 2948 KG FWD CG

PHI	THETA	PSI	ALPHA	BETA	GAMMA	ORR	B1S	A1S	OTR
-1.86	-0.72	0.00	-0.72	0.01	0.00	13.59	-5.63	-1.85	5.41

XDOT	ZDOT	UO	VO	WO	VTO
0.51	0.00	0.51	0.00	-0.01	0.51

	U	W	Q	V	P	R	DC	DB	DA	DP
X	-0.0126	-0.0074	0.1890	-0.0255	-0.4875	-0.0131	-0.0261	0.1268	-0.0005	-0.0000
Z	-0.1936	-0.4665	0.1297	-0.1385	-0.0515	0.6651	-1.1973	0.0382	0.0013	0.0017
M	0.0032	-0.0140	-0.2174	-0.0158	0.2181	-0.0264	0.0018	-0.0538	0.0002	0.0052
Y	0.0130	-0.0019	-0.4511	-0.0447	-0.1081	0.1114	-0.0181	0.0026	0.1048	0.2354
L'	0.0158	-0.0164	-0.6708	-0.0199	-0.0127	0.1149	-0.0373	0.0035	0.1875	0.1424
N'	-0.0084	-0.0211	0.9651	0.0451	-0.1884	-0.7536	0.1548	-0.0025	0.0216	-0.5011

TABLE V-3 CONTINUED
UH-1H STABILITY AND CONTROL DERIVATIVES -- SI UNITS
(BODY-FIXED FRL AXIS SYSTEM)

CASE 161 60 KT LEVEL FLIGHT AT SEA LEVEL 2948 KG FWD CG

PHI	THETA	PSI	ALPHA	BETA	GAMMA	OMR	B1S	A1S	OTR
-0.68	-0.52	0.00	-0.52	0.01	0.00	11.92	-2.56	-1.34	1.76

XDOT	ZDOT	UO	VO	WO	VTO
30.87	0.00	30.87	0.00	-0.28	30.87

	U	W	Q	V	P	R	DC	DB	DA	DP
X	-0.0261	0.0088	0.4527	0.0019	-0.4540	-0.0124	0.0009	0.1240	-0.0019	-0.0073
Z	-0.0353	-1.0930	-0.7281	-0.0250	-0.5424	0.6358	-1.7199	0.4142	-0.0019	-0.0048
M	0.0104	-0.0179	-0.5133	0.0020	0.1899	0.0115	-0.0045	-0.0527	0.0005	-0.0041
Y	0.0010	-0.0084	-0.4442	-0.1518	-0.5842	0.6020	-0.0134	0.0069	0.1060	0.2883
L'	-0.0029	-0.0236	-0.6347	-0.0266	-0.9626	0.2527	-0.0096	0.0158	0.1899	0.1763
N'	-0.0091	-0.0436	0.7137	0.1296	-0.1341	-1.4242	0.0708	0.0204	0.0234	-0.6138

CASE 162 35 KT 18 M/S SEA LEVEL 2948 KG FWD CG

PHI	THETA	PSI	ALPHA	BETA	GAMMA	OMR	B1S	A1S	OTR
-2.37	7.88	0.00	-82.11	2.35	90.00	18.06	2.93	-3.12	8.05

XDOT	ZDOT	UO	VO	WO	VTO
0.00	-18.11	2.48	0.74	-17.92	18.11

	U	W	Q	V	P	R	DC	DB	DA	DP
X	-0.0117	0.1094	-1.0998*	0.0027	-0.4413	-0.0634	0.2190	0.1395	-0.0035	-0.0230
Z	0.0498	-0.7809	-2.7161	-0.1008	-0.3687	1.1391	-1.5357	0.0404	0.0168	0.0191
M	0.0047	-0.0937	-2.0568	0.0008	0.1686	0.0756	-0.0974	-0.0571	0.0016	0.0494
Y	0.0094	-0.0592	-0.6029	-0.0934	0.1739	0.6489	-0.0946	0.0036	0.1192	0.2572
L'	0.0174	-0.0700	-2.4840	-0.0558	0.2902	0.2946	-0.1009	0.0065	0.2133	0.1613
N'	-0.0033	0.1164	-0.3116	0.1396	-0.3554	-1.3170	0.3338	0.0016	0.0249	-0.5455

CASE 163 60 KT 16 M/S SEA LEVEL 2948 KG FWD CG

PHI	THETA	PSI	ALPHA	BETA	GAMMA	OMR	B1S	A1S	OTR
-2.09	3.05	0.00	-28.36	0.99	32.22	17.50	2.51	-3.49	6.26

XDOT	ZDOT	UO	VO	WO	VTO
26.11	-16.46	27.16	0.54	-14.66	30.87

	U	W	Q	V	P	R	DC	DB	DA	DP
X	-0.0393	0.0901	-0.0720	0.0080	-0.3936	-0.1772	0.1456	0.1119	-0.0029	-0.0251
Z	0.0788	-0.9749	-0.0708	-0.0690	-0.6809	1.1577	-1.7103	0.3487	0.0165	0.0042
M	-0.0202	-0.1507	-0.1208	0.0087	0.1536	0.0497	-0.0674	-0.0486	0.0012	0.0145
Y	0.0118	-0.0534	-0.5720	-0.1257	0.0217	0.7859	-0.0856	0.0169	0.1214	0.2793
L'	0.0121	-0.0636	-0.9519	-0.0428	0.0551	0.3558	-0.0462	0.0248	0.2170	0.1757
N'	-0.0311	0.0903	0.0180	0.1665	-0.3342	-1.6171	0.1240	-0.0212	0.0249	-0.5925

* This derivative [illegible] should be used with due caution.

TABLE V-3 CONTINUED
UH-1H STABILITY AND CONTROL DERIVATIVES -- SI UNITS
(BODY-FIXED FRL AXIS SYSTEM)

CASE 164* 31 KT -16 M/S SEA LEVEL 2948 KG FWD CG

PHI	THETA	PSI	ALPHA	BETA	GAMMA	OMR	B1S	A1S	DTR
0.00	-2.44	0.00	87.56	0.00	-90.00	9.48	-7.68	-0.14	-0.01

XDOT	ZDOT	UO	VO	WO	VTO
0.00	15.85	0.67	0.00	15.84	15.85

	U	W	Q	V	P	R	DC	DB	DA	DP
X							-0.0432	0.0036	-0.0540	-0.0013
Z							-0.7202	0.0356	0.0221	0.0000
M							0.0140	-0.0010	0.0236	0.0006
Y							0.0024	0.0672	0.0017	0.5511
L'							0.0121	0.0602	0.0021	0.3264
N'							0.0438	-0.2990	-0.0046	-1.1720

CASE 165 60 KT -9 M/S SEA LEVEL 2948 KG FWD CG

PHI	THETA	PSI	ALPHA	BETA	GAMMA	OMR	B1S	A1S	DTR
0.05	-1.43	0.00	16.09	0.01	-17.53	8.47	-4.80	-0.25	-0.08

XDOT	ZDOT	UO	VO	WO	VTO
29.43	9.30	29.66	0.01	8.56	30.87

	U	W	Q	V	P	R	DC	DB	DA	DP
X	-0.0218	-0.0056	0.8201	0.0011	-0.4590	-0.0101	-0.0517	0.1249	-0.0012	0.0004
Z	-0.0790	-1.0168	-0.7363	-0.0051	-0.3781	0.3120	-1.6666	0.3748	-0.0009	0.0029
M	0.0086	-0.0309	-0.6238	-0.0005	0.1951	0.0154	0.0151	-0.0517	0.0003	-0.0004
Y	-0.0026	0.0139	-0.4135	-0.1439	-0.8959	0.5710	0.0217	0.0004	0.0958	0.3085
L'	-0.0043	0.0045	-0.5385	-0.0411	-1.4796	0.2276	0.0250	0.0096	0.1721	0.1848
N'	-0.0026	-0.1028	0.9852	0.1243	-0.0071	-1.4093	-0.0683	0.0460	0.0224	-0.6484

CASE 166 1 KT LEVEL FLIGHT AT SEA LEVEL 2948 KG AFT CG

PHI	THETA	PSI	ALPHA	BETA	GAMMA	OMR	B1S	A1S	DTR
-1.08	9.18	0.00	9.14	-0.17	0.00	13.61	4.14	-1.55	5.48

XDOT	ZDOT	UO	VO	WO	VTO
0.51	0.00	0.51	-0.00	0.08	0.51

	U	W	Q	V	P	R	DC	DB	DA	DP
X	0.0001	0.0690	0.1343	0.0040	-3.4525	-0.1927	0.2268	0.1215	-0.0013	-0.0016
Z	-0.0538	-0.4478	0.0417	-0.1251	-0.2290	0.6154	-1.1739	0.0176	0.0036	0.0082
M	0.0027	-0.0134	-0.2060	0.0014	0.2193	0.0176	-0.0041	-0.0541	0.0004	0.0053
Y	0.0162	-0.0037	-0.4582	-0.0474	-0.1921	0.1154	-0.0178	0.0019	0.1049	0.2357
L'	0.0227	-0.0162	-1.0581	-0.0327	-0.4229	0.1130	-0.0188	0.0027	0.1924	0.1533
N'	-0.0049	-0.0218	-1.0650	0.0648	-0.3905	[illegible]	0.1492	-0.0011	0.0135	-0.4792

* Stability derivatives [illegible], however, the remaining data were [illegible].

TABLE V-3 CONTINUED
UH-1H STABILITY AND CONTROL DERIVATIVES -- SI UNITS
(BODY-FIXED FRL AXIS SYSTEM)

CASE 167 60 KT LEVEL FLIGHT AT SEA LEVEL 2948 KG APT CG

PHI	THETA	PSI	ALPHA	BETA	GAMMA	ORR	B1S	A1S	OTR
-0.78	8.34	0.00	8.34	-0.11	0.00	11.82	6.31	-1.53	1.91

XDOT	ZDOT	UO	VO	WO	VTO
30.87	0.00	30.54	-0.06	4.48	30.87

	U	W	Q	V	P	R	DC	DB	DA	DP
X	-0.0449	0.1784	0.5448	0.0066	-0.3322	-0.1332	0.2826	0.0530	-0.0011	-0.0076
Z	0.1110	-1.0694	-0.6089	-0.0293	-0.7386	0.5042	-1.6918	0.4172	0.0015	-0.0049
M	0.0078	-0.0084	-0.4602	0.0023	0.1908	0.0158	-0.0018	-0.0561	0.0003	-0.0062
Y	0.0037	-0.0104	-0.4364	-0.1492	-0.5829	0.5563	-0.0169	0.0081	0.1030	0.2893
L'	0.0025	-0.0278	-0.9743	-0.0473	-0.9903	0.2649	-0.0168	0.0182	0.1894	0.1884
N'	-0.0031	-0.0431	-1.0492	0.1092	-0.2093	-1.2896	0.0679	0.0200	0.0338	-0.5883

CASE 168 60 KT 17 M/S SEA LEVEL 2948 KG APT CG

PHI	THETA	PSI	ALPHA	BETA	GAMMA	ORR	B1S	A1S	OTR
-2.08	9.29	0.00	-23.12	0.82	32.43	17.45	7.35	-3.66	6.31

XDOT	ZDOT	UO	VO	WO	VTO
26.05	-16.55	28.39	0.44	-12.12	30.87

	U	W	Q	V	P	R	DC	DB	DA	DP
X	-0.0563	0.1707	-0.0965	0.0163	-0.3102	-0.2764	0.2904	0.0051	-0.0046	-0.0208
Z	0.1538	-0.9765	-0.6849	-0.0727	-0.0188	1.0608	-1.6983	0.3522	0.0133	-0.0038
M	-0.0227	-0.0807	-0.2457	0.0117	0.1797	0.0138	-0.0085	-0.0633	0.0009	0.0093
Y	0.0156	-0.0526	-0.5439	-0.1488	-0.0009	0.7209	-0.0872	0.0183	0.1210	0.2792
L'	0.0161	-0.0689	-1.1160	-0.0358	0.0152	0.3578	-0.0937	0.0282	0.2217	0.1865
N'	-0.0378	0.0818	-0.9909	0.1387	-0.3386	-1.5197	0.3120	-0.0205	0.0358	-0.5664

CASE 169 60 KT -10 M/S SEA LEVEL 2948 KG APT CG

PHI	THETA	PSI	ALPHA	BETA	GAMMA	ORR	B1S	A1S	OTR
0.02	5.14	0.00	28.04	0.01	-18.90	0.21	1.78	-0.30	-0.03

XDOT	ZDOT	UO	VO	WO	VTO
29.20	10.00	28.19	0.01	12.57	30.87

	U	W	Q	V	P	R	DC	DB	DA	DP
X	-0.0208	0.1066	0.9060	0.0002	-0.4014	-0.0518	0.1496	0.0779	-0.0013	-0.0004
Z	0.0117	-0.9642	-0.5315	-0.0050	-0.0888	0.2278	-1.6343	0.3668	-0.0013	0.0030
M	0.0267	-0.0763	-0.4033	-0.0035	0.2062	0.0188	0.0511	-0.0614	0.0005	-0.0004
Y	-0.0040	0.0137	-0.8165	-0.1152	-0.9050	0.5609	0.0225	-0.0009	0.0941	0.3040
L'	-0.0049	0.0084	-0.7970	-0.0421	-1.5376	0.2170	0.0242	0.0069	0.1712	0.1985
N'	0.0086	-0.1022	-0.3210	0.1226	-0.0949	-1.2943	-0.0721	0.0436	-0.0113	-0.6225

TABLE V-3 CONTINUED
UH-1H STABILITY AND CONTROL DERIVATIVES -- SI UNITS
(BODY-FIXED FRL AXIS SYSTEM)

CASE 170 1 KT LEVEL FLIGHT AT SEA LEVEL 4309 KG MID CG

PHI	THETA	PSI	ALPHA	BETA	GAMMA	OMN	B1S	A1S	OTR
-1.09	4.88	0.00	4.88	-0.09	0.00	15.40	-0.08	-1.74	7.54

XDOT	ZDOT	UO	VO	WO	VTO
0.51	0.00	0.51	-0.00	0.04	0.51

	U	W	Q	V	P	R	DC	DB	DA	DP
X	-0.0056	0.0257	0.2206	-0.0088	-0.3844	-0.1050	0.0861	0.1264	-0.0008	-0.0003
Z	-0.0716	-0.3286	0.0916	-0.0819	-0.1184	0.6666	-1.0106	0.0344	0.0011	0.0015
M	0.0077	-0.0132	-0.3135	0.0066	0.2504	0.0371	-0.0021	-0.0801	0.0005	0.0069
Y	0.0159	-0.0039	-0.3725	-0.0439	-0.3208	0.2326	-0.0326	0.0014	0.1072	0.1709
L'	0.0322	-0.0161	-0.9162	-0.0526	-0.7415	0.1608	-0.0514	0.0033	0.2518	0.1844
N'	-0.0038	-0.0204	-0.1973	0.0689	-0.3041	-0.7102	0.1860	-0.0001	0.0367	-0.4585

CASE 171 60 KT LEVEL FLIGHT AT SEA LEVEL 4309 KG MID CG

PHI	THETA	PSI	ALPHA	BETA	GAMMA	OMN	B1S	A1S	OTR
-0.62	4.72	0.00	4.72	-0.05	0.00	13.31	2.54	-1.64	2.49

XDOT	ZDOT	UO	VO	WO	VTO
30.87	0.00	30.76	-0.03	2.54	30.87

	U	W	Q	V	P	R	DC	DB	DA	DP
X	-0.0229	0.0590	0.4992	0.0011	-0.3190	-0.0885	0.0864	0.1038	-0.0017	-0.0067
Z	0.0059	-0.7220	-0.3868	-0.0217	-0.4567	0.5806	-1.1488	0.2841	0.0006	-0.0024
M	0.0120	-0.0048	-0.5572	0.0040	0.2217	0.0127	0.0116	-0.0812	0.0008	-0.0055
Y	0.0005	-0.0035	-0.3300	-0.1076	-0.5725	0.3813	-0.0061	0.0059	0.1059	0.1962
L'	-0.0041	-0.0157	-0.7637	-0.0675	-1.2689	0.3143	-0.0014	0.0166	0.2485	0.2119
N'	-0.0119	-0.0523	-0.0608	0.0998	-0.2160	-1.2097	0.0975	0.0247	0.0351	-0.5261

CASE 172 100 KT LEVEL FLIGHT AT SEA LEVEL 4309 KG MID CG

PHI	THETA	PSI	ALPHA	BETA	GAMMA	OMN	B1S	A1S	OTR
-0.83	3.91	0.00	3.91	-0.06	0.00	13.97	5.08	-1.72	2.63

XDOT	ZDOT	UO	VO	WO	VTO
51.44	0.00	51.32	-0.05	3.50	51.44

	U	W	Q	V	P	R	DC	DB	DA	DP
X	-0.0402	0.0737	0.5559	0.0052	-0.2742	-0.0984	0.1055	0.0782	-0.0016	-0.0161
Z	0.0736	-0.8133	-0.9184	-0.0234	-0.7401	0.6366	-1.2900	0.5047	0.0032	-0.0026
M	0.0171	-0.0124	-0.7301	0.0014	0.2028	0.0183	0.0071	-0.0859	0.0008	0.0002
Y	0.0030	-0.0149	-0.3230	-0.1551	-0.5769	0.5086	-0.0227	0.0145	0.1088	0.2507
L'	0.0046	-0.0425	-0.7630	-0.0788	-1.2563	0.4291	-0.0414	0.0378	0.2548	0.2716
N'	0.0015	-0.0567	-0.1644	0.1195	-0.1644	-1.6042	0.0876	0.0394	0.0358	-0.6710

TABLE V-3 CONTINUED
UH-1H STABILITY AND CONTROL DERIVATIVES -- SI UNITS
(BODY-FIXED FRL AXIS SYSTEM)

CASE 173 1 KT LEVEL FLIGHT AT SEA LEVEL 4309 KG FWD CG

PHI	THETA	PSI	ALPHA	BETA	GAMMA	OMR	B1S	A1S	OTR
-1.09	1.95	0.00	1.95	-0.04	0.00	15.38	-2.92	-1.70	7.50

XDOT	ZDOT	UO	VO	WO	VTO
0.51	0.00	0.51	-0.00	0.02	0.51

	U	W	Q	V	P	R	DC	DB	DA	DP
X	-0.0090	0.0092	0.2171	-0.0138	-0.3914	-0.0799	0.0322	0.1277	-0.0007	-0.0006
Z	-0.1014	-0.3320	0.1134	-0.0796	-0.0634	0.6789	-1.0134	0.0372	0.0035	0.0067
M	0.0078	-0.0136	-0.3168	0.0066	0.2500	0.0276	-0.0007	-0.0798	0.0005	0.0072
Y	0.0150	-0.0040	-0.3723	-0.0437	-0.3198	0.2374	-0.0327	0.0018	0.1072	0.1709
L'	0.0299	-0.0162	-0.8501	-0.0517	-0.7351	0.1636	-0.0511	0.0041	0.2500	0.1821
N'	-0.0052	-0.0202	0.3018	0.0704	-0.2963	-0.7273	0.1882	0.0003	0.0326	-0.4667

CASE 174 60 KT LEVEL FLIGHT AT SEA LEVEL 4309 KG FWD CG

PHI	THETA	PSI	ALPHA	BETA	GAMMA	OMR	B1S	A1S	OTR
-0.60	1.99	0.00	1.99	-0.02	0.00	13.34	-0.12	-1.59	2.05

XDOT	ZDOT	UO	VO	WO	VTO
30.87	0.00	30.85	-0.01	1.07	30.87

	U	W	Q	V	P	R	DC	DB	DA	DP
X	-0.0210	0.0250	0.0828	0.0001	-0.3918	-0.0530	0.0298	0.1189	-0.0010	-0.0066
Z	-0.0231	-0.7238	-0.6178	-0.0205	-0.0036	0.6123	-1.1527	0.2842	0.0023	0.0017
M	0.0129	-0.0077	-0.5744	0.0039	0.2199	0.0083	0.0110	-0.0826	0.0005	-0.0052
Y	0.0001	-0.0033	-0.3303	-0.1082	-0.5706	0.1952	-0.0053	0.0066	0.1076	0.1960
L'	-0.0051	-0.0151	-0.6990	-0.0623	-1.2556	0.3233	0.0007	0.0185	0.2510	0.2090
N'	-0.0142	-0.0520	0.6127	0.1057	-0.1921	-1.2036	0.0998	0.0262	0.0321	-0.5333

CASE 175 0 KT 4 M/S SEA LEVEL 4309 KG FWD CG

PHI	THETA	PSI	ALPHA	BETA	GAMMA	OMR	B1S	A1S	OTR
-1.31	2.75	0.00	-87.25	1.31	90.00	16.18	-2.39	-1.38	8.32

XDOT	ZDOT	UO	VO	WO	VTO
0.00	-3.96	0.19	0.09	-3.96	3.96

	U	W	Q	V	P	R	DC	DB	DA	DP
X	-0.0199	0.0167	0.2367	-0.0158	-0.3835	-0.0653	0.0480	0.1285	-0.0009	-0.0035
Z	-0.0378	-0.3689	-0.0728	-0.0821	-0.1178	0.7374	-1.0133	0.0343	0.0067	0.0143
M	0.0115	-0.0274	-0.3554	0.0038	0.2425	0.0159	-0.0084	-0.0801	0.0007	0.0177
Y	0.0131	-0.0197	-0.6748	-0.0487	-0.2751	0.2699	-0.0391	0.0017	0.1089	0.1761
L'	0.0273	-0.0162	-0.9696	-0.1576	-0.4255	0.1974	-0.0429	0.0018	0.2540	0.1889
N'	-0.0082	0.0224	0.6382	0.0781	-0.3039	-0.8068	0.2161	-0.0011	0.0330	-0.4748

MICROFILMED FROM
BEST AVAILABLE COPY

TABLE V-3 CONTINUED
UH-1H STABILITY AND CONTROL DERIVATIVES -- SI UNITS
(BODY-FIXED FRL AXIS SYSTEM)

CASE 176 60 KT 0 M/S SEA LEVEL 4309 KG FWD CG

PHI	THETA	PSI	ALPHA	BETA	GAMMA	OMR	B1S	A1S	OTR
-1.26	0.29	0.00	-15.46	0.34	15.76	16.37	-0.87	-2.74	5.68

XDOT	ZDOT	UO	VO	WO	VTO
29.71	-8.38	29.75	0.18	-8.23	30.87

	U	W	Q	V	P	R	DC	DB	DA	DP
X	-0.0243	0.0236	0.3239	0.0014	-0.3499	-0.0538	0.0029	0.1324	-0.0012	-0.0153
Z	-0.0168	-0.6854	-0.6300	-0.0343	-0.0123	0.0180	-1.1637	0.2684	0.0057	-0.0019
M	0.0191	0.0299	-0.4027	0.0070	0.2175	-0.0120	0.0230	-0.0889	0.0005	0.0023
Y	0.0040	-0.0184	-0.3813	-0.1192	-0.3567	0.4625	-0.0323	0.0103	0.1142	0.1919
L'	-0.0065	-0.0463	-0.7795	-0.0519	-0.7762	0.3708	-0.0046	0.0235	0.2661	0.2066
N'	-0.0256	0.0151	0.6527	0.1152	-0.2965	-1.3815	0.2245	0.0009	0.0326	-0.5211

CASE 177 60 KT -8 M/S SEA LEVEL 4309 KG FWD CG

PHI	THETA	PSI	ALPHA	BETA	GAMMA	OMR	B1S	A1S	OTR
-0.01	1.53	0.00	16.06	-0.00	-14.53	10.56	-1.35	-0.63	0.06

XDOT	ZDOT	UO	VO	WO	VTO
29.88	7.78	29.66	-0.00	8.54	30.87

	U	W	Q	V	P	R	DC	DB	DA	DP
X	-0.0177	0.0239	0.6895	-0.0014	-0.3482	-0.0379	0.0122	0.1150	-0.0010	-0.0005
Z	-0.0838	-0.6765	-0.6604	-0.0083	-0.3030	0.0336	-1.1148	0.2537	0.0008	0.0003
M	0.0110	-0.0256	-0.6589	0.0012	0.2239	0.0213	0.0183	-0.0786	0.0006	-0.0011
Y	-0.0037	0.0098	-0.3111	-0.1035	-0.7336	0.3713	0.0150	0.0005	0.1002	0.2068
L'	-0.0088	0.0107	-0.6528	-0.0700	-1.6110	0.2875	0.0343	0.0063	0.2336	0.2201
N'	-0.0086	-0.0911	0.6785	0.1043	-0.0837	-1.2268	-0.0012	0.0009	0.0297	-0.5631

CASE 178 1 KT LEVEL FLIGHT AT SEA LEVEL 4309 KG AFT CG

PHI	THETA	PSI	ALPHA	BETA	GAMMA	OMR	B1S	A1S	OTR
-1.10	7.82	0.00	7.82	-0.15	0.00	15.39	2.77	-1.78	7.55

XDOT	ZDOT	UO	VO	WO	VTO
0.51	0.00	0.51	-0.00	0.07	0.51

	U	W	Q	V	P	R	DC	DB	DA	DP
X	-0.0056	0.0416	0.2177	-0.0157	-0.3736	-0.1288	0.1398	0.1251	-0.0012	-0.0014
Z	-0.0418	-0.3237	0.0821	-0.0987	-0.1611	0.6665	-1.0037	0.0371	0.0034	0.0080
M	0.0050	-0.0158	-0.3141	-0.0163	0.2504	-0.0329	-0.0038	-0.0005	0.0004	0.0072
Y	0.0168	-0.0018	-0.3759	-0.0422	-0.1220	0.2242	-0.0121	0.0015	0.1073	0.1712
L'	0.0345	-0.0158	-0.9905	-0.0641	-0.7684	0.1600	-0.0512	0.0011	0.2516	0.1876
N'	-0.0024	-0.0205	-0.7027	0.0459	-0.3116	-0.6936	0.1867	-0.0005	0.0412	-0.6521

TABLE V-3 CONCLUDED
UH-1H STABILITY AND CONTROL DERIVATIVES -- SI UNITS
(BODY-FIXED FRL AXIS SYSTEM)

CASE 179 60 KT LEVEL FLIGHT AT SEA LEVEL 4309 KG APT CG

PHI	THETA	PSI	ALPHA	BETA	GAMMA	OMR	B1S	A1S	OTR
-0.64	7.41	0.00	7.41	-0.08	0.00	13.27	5.19	-1.69	2.53

XDOT	ZDOT	UO	VO	WO	VTO
30.87	0.00	30.61	-0.04	3.98	30.87

	U	W	Q	V	P	R	DC	DR	DA	DP
X	-0.0270	0.0927	0.5146	0.0023	-0.2907	-0.1191	0.1430	0.0895	-0.0019	-0.0067
Z	0.0349	-0.7176	-0.3548	-0.0227	-0.5005	0.5493	-1.1624	0.2857	0.0002	-0.0029
M	0.0109	-0.0025	-0.5432	0.0041	0.2222	0.0159	0.0119	-0.0843	0.0010	-0.0064
Y	0.0009	-0.0037	-0.3276	-0.1071	-0.5730	0.3705	-0.0064	0.0060	0.1047	0.1965
L'	-0.0028	-0.0163	-0.8229	-0.0723	-1.2789	0.3107	-0.0022	0.0170	0.2472	0.2148
N'	-0.0095	-0.0525	-0.5292	0.0941	-0.2385	-1.1789	0.0965	0.0247	0.3390	-0.5191

CASE 180 6[illegible] 10 M/S SEA LEVEL 4309 KG APT CG

PHI	THETA	PSI	ALPHA	BETA	GAMMA	OMR	B1S	A1S	OTR
-1.62	8.25	0.00	-9.99	0.25	18.24	16.64	6.14	-3.01	6.14

XDOT	ZDOT	UO	VO	WO	VTO
29.32	-9.66	30.80	0.13	-5.35	30.87

	U	W	Q	V	P	R	DC	DR	DA	DP
X	-0.0317	0.0950	0.3000	0.0067	-0.2706	-0.1716	0.1482	0.1019	-0.0029	-0.0158
Z	0.0572	-0.6957	-0.4587	-0.0382	-0.5398	0.7599	-1.1360	0.2763	0.0044	-0.0062
M	0.0160	-0.0119	-0.4012	0.0066	0.2617	0.0075	-0.0101	-0.0823	0.0011	-0.0015
Y	0.0075	-0.0193	-0.3766	-0.1164	-0.3469	0.4269	-0.0389	0.0110	0.1161	0.1919
L'	0.0074	-0.0419	-0.8798	-0.0618	-0.7614	0.3657	-0.0594	0.0291	0.2694	0.2112
N'	-0.0285	0.0168	-0.5802	0.1005	-0.3342	-1.2843	0.2315	-0.0002	0.0415	-0.5062

CASE 181 60 KT -8 M/S SEA LEVEL 4309 KG APT CG

PHI	THETA	PSI	ALPHA	BETA	GAMMA	OMR	B1S	A1S	OTR
-0.03	6.32	0.00	21.14	-0.01	-14.82	10.48	3.39	-0.70	0.14

XDOT	ZDOT	UO	VO	WO	VTO
29.84	7.89	28.79	-0.01	11.13	30.87

	U	W	Q	V	P	R	DC	DR	DA	DP
X	-0.0186	0.0778	0.7246	-0.0010	-0.3120	-0.0791	0.1104	0.0913	-0.0009	-0.0019
Z	-0.0008	-0.6523	-0.3714	-0.0086	-0.3671	0.3935	-1.0999	0.2564	0.0019	0.0048
M	0.0225	-0.0645	-0.6848	-0.0011	0.2241	0.0216	0.0276	-0.0810	0.0003	-0.0015
Y	-0.0039	0.0097	-0.1870	-0.0933	-0.7291	0.3591	0.0167	0.0020	0.1006	0.2048
L'	-0.0086	0.0158	-0.7568	-0.0700	-1.6240	0.2929	0.0187	0.0098	0.2372	0.2251
N'	0.0029	-0.0095	-0.3542	0.1010	-0.1187	-1.1577	0.0801	0.0400	0.0179	-0.5458

TABLE V-4

UH-IH STABILITY AND CONTROL DERIVATIVES -- US UNITS

(BODY-FIXED FRL AXIS SYSTEM)

CASE 119 -40 KT LEVEL FLIGHT AT SEA LEVEL 9000 LB MID CG

PHI	THETA	PSI	ALPHA	BETA	GAMMA	QHR	B1S	A1S	QTR
-0.70	3.38	0.00	-176.62	0.04	180.00	12.71	-2.98	-0.36	2.54

XDOT	ZDOT	UO	VO	WO	VTO
-67.51	0.00	-67.39	0.05	-3.98	67.51

	U	W	Q	V	P	R	DC	DB	DA	DP
X	-0.0234	0.0452	1.5028	-0.0031	-1.3647	-0.1972	0.7091	1.1480	-0.0015	0.0424
Z	0.1767	-0.6921	0.4462	-0.0113	0.5916	1.9518	-10.4083	-1.5763	-0.0358	-0.0248
M	0.0004	0.0084	-0.0564	0.0001	0.2072	0.0455	-0.0356	-0.0739	0.0005	0.0328
Y	-0.0021	-0.0217	-1.2258	-0.0479	-1.6110	0.9911	-0.3067	-0.0321	0.8738	1.6932
L'	0.0019	-0.0156	-0.7668	-0.0171	-0.9371	0.2419	-0.1536	-0.0247	0.5573	0.4241
N'	0.0076	-0.0123	0.0669	0.0262	-0.0318	-0.8473	0.2385	-0.0299	0.0851	-1.2413

CASE 120 -20 KT LEVEL FLIGHT AT SEA LEVEL 9000 LB MID CG

PHI	THETA	PSI	ALPHA	BETA	GAMMA	QHR	B1S	A1S	QTR
-0.90	2.53	0.00	-177.47	0.04	180.00	13.58	-3.23	-0.72	4.41

XDOT	ZDOT	UO	VO	WO	VTO
-33.76	0.00	-33.72	0.02	-1.49	33.76

	U	W	Q	V	P	R	DC	DB	DA	DP
X	-0.0122	0.0142	0.9670	-0.0047	-1.3692	-0.2238	0.4575	1.0665	-0.0068	0.0440
Z	0.2715	-0.4965	-0.9894	-0.0277	0.1700	1.9232	-9.3180	-0.6308	-0.0162	0.0355
M	0.0059	0.0032	-0.1062	0.0007	0.2168	0.0457	-0.0092	-0.1679	0.0012	0.0287
Y	-0.0014	-0.0171	-1.2951	-0.0389	-1.2926	0.7004	-0.3020	-0.0267	0.8612	1.4157
L'	0.0042	-0.0120	-0.8009	-0.0144	-0.7529	0.1640	-0.1336	-0.0161	0.5511	0.3593
N'	0.0104	-0.0061	0.2140	0.0191	-0.0815	-0.6211	0.3418	-0.0072	0.0870	-1.0365

CASE 121 -10 KT LEVEL FLIGHT AT SEA LEVEL 9000 LB MID CG

PHI	THETA	PSI	ALPHA	BETA	GAMMA	QHR	B1S	A1S	QTR
-1.01	3.98	0.00	-176.02	0.07	180.00	14.17	-1.77	-1.11	5.65

XDOT	ZDOT	UO	VO	WO	VTO
-16.88	0.00	-16.84	0.02	-1.17	16.88

	U	W	Q	V	P	R	DC	DB	DA	DP
X	-0.0345	0.0221	0.8455	-0.0059	-1.3783	-0.3057	0.6598	1.0693	-0.0053	0.0514
Z	0.2192	-0.3993	-1.1141	-0.0453	-0.1426	2.1001	-9.4407	-0.2497	-0.0092	0.0298
M	0.0056	-0.0034	-0.2736	0.0011	0.2251	0.0465	0.0021	-0.1847	0.0010	0.0265
Y	0.0030	-0.0122	-1.1646	-0.0438	-1.0602	0.8664	-0.2961	-0.0102	0.8741	1.5981
L'	0.0070	-0.0087	-0.1729	-0.0128	-0.6428	0.1469	-0.1205	-0.0054	0.5587	0.4111
N'	0.0093	-0.0046	0.0244	0.0212	-0.1760	-0.7148	0.4025	-0.0013	0.0865	-1.1718

TABLE V-4 CONTINUED

UH-1H STABILITY AND CONTROL DERIVATIVES -- US UNITS

(BODY-FIXED FRL AXIS SYSTEM)

CASE 122 1 KT LEVEL FLIGHT AT SEA LEVEL 8000 LB MID CG

PHI	THETA	PSI	ALPHA	BETA	GAMMA	OMR	B1S	A1S	OTR
-1.07	4.04	0.00	4.04	-0.38	0.00	14.51	-0.90	-1.60	6.44

XDOT	ZDOT	UO	VO	WO	VTO
1.69	0.00	1.68	-0.00	0.12	1.69

	U	W	Q	V	P	R	DC	DR	DA	DP
X	-0.0034	0.0253	0.5797	-0.0077	-1.3861	-0.2549	0.6806	1.0496	-0.0071	-0.0062
Z	-0.0991	-0.3050	0.2911	-0.0962	-0.3965	2.2129	-9.7745	0.3214	0.0300	0.0702
M	0.0019	-0.0038	-0.1900	0.0014	0.2342	0.0385	-0.0011	-0.1691	0.0011	0.0158
Y	0.0150	-0.0040	-1.3355	-0.0451	-0.8760	0.8785	-0.2902	0.0141	0.8842	1.6328
L'	0.0077	-0.0049	-0.8779	-0.0127	-0.5720	0.1391	-0.1125	0.0084	0.5632	0.4211
N'	-0.0017	-0.0063	-0.0597	0.0209	-0.3176	-0.7094	0.4384	-0.0010	0.0827	-1.1961

CASE 123 10 KT LEVEL FLIGHT AT SEA LEVEL 8000 LB MID CG

PHI	THETA	PSI	ALPHA	BETA	GAMMA	OMR	B1S	A1S	OTR
-0.99	3.95	0.00	3.95	-0.07	0.00	14.15	-0.68	-1.78	5.74

XDOT	ZDOT	UO	VO	WO	VTO
16.88	0.00	16.94	-0.02	1.16	16.88

	U	W	Q	V	P	R	DC	DR	DA	DP
X	-0.0036	0.0300	0.8169	-0.0056	-1.3627	-0.2607	0.6176	1.0300	-0.0059	-0.0210
Z	-0.1841	-0.4456	1.1132	-0.0512	-0.5945	2.0436	-9.4592	0.4954	0.0085	-0.0284
M	0.0019	-0.0028	-0.2695	0.0020	0.2311	0.0250	0.0068	-0.1709	0.0008	0.0003
Y	0.0149	-0.0016	-1.3639	-0.0544	-1.0962	0.8944	-0.2252	0.0227	0.8849	1.6058
L'	0.0060	-0.0035	-0.8566	-0.0121	-0.6855	0.1429	-0.0784	0.0138	0.5629	0.4128
N'	-0.0056	-0.0062	0.0274	0.0211	-0.3037	-0.7329	0.3987	0.0028	0.0808	-1.1776

CASE 124 20 KT LEVEL FLIGHT AT SEA LEVEL 8000 LB MID CG

PHI	THETA	PSI	ALPHA	BETA	GAMMA	OMR	B1S	A1S	OTR
-0.86	3.70	0.00	3.70	-0.06	0.00	13.57	-0.47	-1.79	4.59

XDOT	ZDOT	UO	VO	WO	VTO
33.76	0.00	33.69	-0.01	2.18	33.76

	U	W	Q	V	P	R	DC	DR	DA	DP
X	-0.0046	0.0380	1.0633	-0.0045	-1.3189	-0.2394	0.5631	1.0171	-0.0006	-0.0137
Z	-0.1978	-0.5667	1.1711	-0.0378	-0.7051	1.8644	-9.2021	0.8788	0.0326	0.0291
M	0.0012	-0.0009	-0.2947	0.0021	0.2264	0.0149	0.0156	-0.1711	-0.0001	-0.0088
Y	0.0133	-0.0014	-1.3373	-0.0654	-1.3429	0.8771	-0.1414	0.0411	0.8991	1.4100
L'	0.0039	-0.0031	-0.8352	-0.0121	-0.8210	0.1442	-0.0127	0.0269	0.5657	0.3611
N'	-0.0067	-0.0071	0.1064	0.0216	-0.2744	-0.7396	0.3512	0.0150	0.0829	-1.0338

TABLE V-4 CONTINUED

UH-IH STABILITY AND CONTROL DERIVATIVES -- US UNITS

(BODY-FIXED FRL AXIS SYSTEM)

CASE 125 40 KT LEVEL FLIGHT AT SEA LEVEL 8000 LB MID CG

PHI	THETA	PSI	ALPHA	BETA	GAMMA	OMR	B1S	A1S	OTR
-0.68	4.15	0.00	4.15	-0.35	0.00	12.74	0.73	-1.63	2.71

XDOT	ZDOT	U0	V0	W0	VTO
67.51	0.00	67.34	-0.06	4.88	67.51

	U	W	Q	V	P	R	DC	DB	DA	DP
X	-0.0146	0.0545	1.3920	-0.0003	-1.2667	-0.2462	0.7010	0.9278	-0.0127	-0.0277
Z	-0.0668	-0.7689	-0.3180	-0.0262	-1.1861	1.0070	-10.1159	1.7268	0.0082	-0.0532
M	0.0025	-0.0018	-0.4186	0.0016	0.2138	0.0308	0.0183	-0.1730	0.0017	-0.0200
Y	0.0070	-0.0023	-1.2960	-0.0942	-1.7136	1.2003	-0.0752	0.0307	0.8757	1.5972
L'	0.0017	-0.0037	-0.7981	-0.0366	-1.2603	0.2255	-0.1056	0.0213	0.5570	0.4131
N'	-0.0059	-0.0116	0.0279	0.0275	-0.2508	-1.0228	0.2608	0.0304	0.0781	-1.1721

CASE 126 60 KT LEVEL FLIGHT AT SEA LEVEL 8000 LB MID CG

PHI	THETA	PSI	ALPHA	BETA	GAMMA	OMR	B1S	A1S	OTR
-0.65	3.91	0.00	3.91	-0.04	0.00	12.58	1.72	-1.50	2.10

XDOT	ZDOT	U0	V0	W0	VTO
101.27	0.00	101.03	-0.08	6.90	101.27

	U	W	Q	V	P	R	DC	DB	DA	DP
X	-0.0244	0.0665	1.6362	0.0022	-1.1632	-0.2721	0.9087	0.8362	-0.0148	-0.0557
Z	0.0123	-0.8757	-1.6172	-0.0235	-1.7359	1.9185	-11.5243	2.8179	-0.0099	-0.0383
M	0.0032	-0.0027	-0.5230	0.0009	0.2041	0.0131	0.0125	-0.1742	0.0018	-0.0136
Y	0.0010	-0.0056	-1.2425	-0.1248	-1.8915	1.5187	-0.0798	0.0506	0.8756	1.9685
L'	-0.0008	-0.0061	-0.7735	-0.0160	-1.1266	0.2915	-0.0162	0.0401	0.5576	0.5058
N'	-0.0028	-0.0169	-0.0281	0.0335	-0.1966	-1.2827	0.2098	0.0575	0.3790	-1.4287

CASE 127 80 KT LEVEL FLIGHT AT SEA LEVEL 8000 LB MID CG

PHI	THETA	PSI	ALPHA	BETA	GAMMA	OMR	B1S	A1S	OTR
-0.73	3.56	0.00	3.56	-0.05	0.00	12.81	2.95	-1.49	2.07

XDOT	ZDOT	U0	V0	W0	VTO
135.02	0.05	134.76	-0.11	8.39	135.02

	U	W	Q	V	P	R	DC	DB	DA	DP
X	-0.0160	0.0788	1.7281	0.0061	-1.0932	-0.3010	0.9506	0.7076	-0.0207	-0.0808
Z	0.0571	-0.9464	-2.6911	-0.0262	-2.3897	2.0065	-12.4550	1.9256	-0.0421	-0.1085
M	0.0040	-0.0041	-0.4176	0.0005	0.1967	0.0192	-0.0002	-0.1736	0.0021	-0.0097
Y	0.0020	-0.0115	-1.2967	-0.1570	-1.9681	1.7732	-0.1691	0.0769	0.8787	2.2632
L'	0.0306	-0.0099	-0.7025	-0.1959	-1.3615	0.3414	-0.0630	0.0177	0.5589	0.5829
N'	-0.0008	-0.0167	-0.1171	0.0376	-0.1555	-1.6101	0.1895	0.0736	0.0775	-1.6688

TABLE V-4 CONTINUED
UH-1H STABILITY AND CONTROL DERIVATIVES -- US UNITS
(BODY-FIXED FRL AXIS SYSTEM)

CASE 128 100 KT LEVEL FLIGHT AT SEA LEVEL 8000 LB MID CG

PHI	THETA	PSI	ALPHA	BETA	GAMMA	θHR	B1S	A1S	θTR
-0.94	3.07	0.00	3.02	-0.05	0.00	13.42	4.46	-1.74	2.41

XDOT	ZDOT	U0	V0	W0	VT0
168.78	0.00	168.54	-0.15	8.91	168.78

	U	W	Q	V	P	R	DC	DB	DA	DP
X	-0.0451	0.0925	1.7727	0.0063	-0.9858	-0.3160	1.1402	0.5568	-0.0185	-0.1423
Z	0.0888	-0.9963	-3.4493	-0.0285	-2.9758	2.1661	-13.1274	5.0738	-0.0283	-0.0532
M	0.0050	-0.0066	-0.7012	0.0003	0.1838	0.0171	-0.0223	-0.1728	0.0016	-0.0013
Y	0.0038	-0.0195	-1.2146	-0.1815	-1.8661	2.0207	-0.2541	0.1414	0.9021	2.4831
L'	0.0018	-0.0147	-0.7883	-0.0178	-1.0889	0.3945	-0.1256	0.0996	0.5734	0.6465
N'	0.0010	-0.0148	-0.2407	0.0404	-0.1554	-1.7052	0.2104	0.0818	0.0806	-1.8181

CASE 129 120 KT LEVEL FLIGHT AT SEA LEVEL 8000 LB MID CG

PHI	THETA	PSI	ALPHA	BETA	GAMMA	θHR	B1S	A1S	θTR
-1.29	2.22	0.00	2.22	-0.05	0.00	14.46	6.23	-2.22	3.03

XDOT	ZDOT	U0	V0	W0	VT0
202.54	0.00	202.38	-0.18	7.85	202.54

	U	W	Q	V	P	R	DC	DB	DA	DP
X	-0.0565	0.1053	1.7155	0.0099	-0.8365	-0.3818	1.3425	0.3770	-0.0230	-0.2684
Z	0.1155	-1.0305	-4.0105	-0.0373	-3.6234	2.3678	-13.6269	6.1710	-0.0213	-0.0305
M	0.0061	-0.0093	-0.7778	-0.0001	0.1588	0.0199	-0.0483	-0.1735	0.0019	0.0296
Y	0.0068	-0.0307	-1.2199	-0.2096	-1.7337	2.2503	-0.4331	0.2356	0.9193	2.7183
L'	0.0036	-0.0211	-0.8030	-0.0186	-1.0047	0.4489	-0.2242	0.1598	0.5872	0.7116
N'	0.0014	-0.0108	-0.3493	0.0425	-0.1782	-1.9854	0.2811	0.0765	0.0882	-1.9859

CASE 130 130 KT LEVEL FLIGHT AT SEA LEVEL 8000 LB MID CG

PHI	THETA	PSI	ALPHA	BETA	GAMMA	θHR	B1S	A1S	θTR
-1.51	1.69	0.00	1.69	-0.04	0.00	15.15	7.21	-2.55	3.46

XDOT	ZDOT	U0	V0	W0	VT0
219.41	0.00	219.32	-0.17	6.48	219.41

	U	W	Q	V	P	R	DC	DB	DA	DP
X	-0.0622	0.1099	1.6544	0.0114	-0.7758	-0.4217	1.4228	0.2944	-0.0230	-0.3418
Z	0.1266	-1.0171	-4.1091	-0.0422	-1.8088	2.5117	-13.8152	6.6677	-0.0118	-0.0213
M	0.0066	-0.0104	-0.8135	-0.0002	0.1498	0.0228	-0.0601	-0.1774	0.0016	0.0896
Y	0.0078	-0.0366	-1.2392	-0.2234	-1.6291	2.3561	-0.5191	0.2924	0.9384	2.7911
L'	0.0040	-0.0241	-0.8205	-0.0181	-0.9195	0.4741	-0.2815	0.1922	0.5995	0.7322
N'	0.0009	-0.0075	-0.4014	0.0411	-0.1987	-1.9741	0.1177	0.0591	0.0910	-2.0366

MICROFILMED FROM
BEST AVAILABLE COPY

TABLE V-4 CONTINUED

UH-1H STABILITY AND CONTROL DERIVATIVES -- US UNITS

(BODY-FIXED FRL AXIS SYSTEM)

CASE 131 22 KT 2178 FT/MIN SEA LEVEL 8000 LB MID CG

PHI	THETA	PSI	ALPHA	BETA	GAMMA	QMR	B1S	A1S	QTR
-1.78	7.26	0.00	-82.71	1.76	90.00	16.97	2.28	-2.57	8.37

XDOT	ZDOT	U0	V0	W0	VT0
0.00	-36.30	4.59	1.12	-35.99	36.30

	U	W	Q	V	P	R	DC	DB	DA	DP
X	-0.0140	0.0645	-2.6805*	-0.0011	-1.2844	-0.5337	1.3277	1.0855	-0.0144	-0.0826
Z	0.0059	-0.5336	-4.2985	-0.0941	-0.8329	2.7813	-10.1030	0.3147	0.0580	0.0973
M	0.0034	-0.0142	-1.7539	0.0005	0.2086	0.2280	-0.0909	-0.1755	0.0018	0.0816
Y	0.0110	-0.0355	-1.7753	-0.0659	-0.3511	1.3273	-0.4981	0.0141	0.9354	1.7518
L'	0.0061	-0.0163	-0.3754	-0.0180	-0.2191	0.2495	-0.2060	0.0041	0.5958	0.4622
N'	-0.0004	0.0188	-0.3835	0.0317	-0.3249	-0.9932	0.6598	-0.0042	0.0861	-1.2819

CASE 132 60 KT 2436 FT/MIN SEA LEVEL 8000 LB MID CG

PHI	THETA	PSI	ALPHA	BETA	GAMMA	QMR	B1S	A1S	QTR
-1.62	3.10	0.00	-20.52	0.57	23.64	16.94	1.81	-3.15	6.14

XDOT	ZDOT	U0	V0	W0	VT0
92.77	-40.60	94.84	1.01	-35.50	101.27

	U	W	Q	V	P	R	DC	DB	DA	DP
X	-0.0321	0.0585	0.5294	0.0052	-1.1806	-0.4037	0.7048	0.9949	-0.0146	-0.1657
Z	0.0295	-0.8181	-1.7202	-0.0499	-1.7978	3.0943	-11.4865	2.5586	0.0747	-0.0064
M	-0.0034	-0.0138	-0.3519	0.0032	0.1991	-0.0016	0.0229	-0.1921	0.0011	0.0165
Y	0.0069	-0.0311	-1.4813	-0.1315	-0.6733	1.8906	-0.4442	0.1091	0.9796	1.8908
L'	0.0011	-0.0158	-0.8635	-0.0125	-0.3903	0.3661	-0.1681	0.0631	0.6232	0.4992
N'	-0.0086	0.0147	0.1512	0.0391	-0.3290	-1.4697	0.6756	-0.0269	0.0861	-1.3829

CASE 133 100 KT 1908 FT/MIN SEA LEVEL 8000 LB MID CG

PHI	THETA	PSI	ALPHA	BETA	GAMMA	QMR	B1S	A1S	QTR
-1.66	4.42	0.00	-6.44	0.19	10.86	16.79	5.94	-2.98	4.87

XDOT	ZDOT	U0	V0	W0	VT0
165.76	-31.80	167.71	0.55	-18.93	169.78

	U	W	Q	V	P	R	DC	DB	DA	DP
X	-0.0516	0.0851	0.8876	0.0117	-0.9451	-0.5345	1.2556	0.6586	-0.0229	-0.2810
Z	0.1091	-0.9611	-1.9969	-0.0481	-3.1210	3.0716	-12.7212	4.8112	0.0408	-0.0092
M	0.0062	-0.0087	-0.6111	0.0002	0.1728	0.0419	-0.0371	-0.1929	0.0015	0.0418
Y	0.0088	-0.0175	-1.1981	-0.1897	-1.0921	2.2129	-0.5441	0.2378	1.3194	2.3681
L'	0.0035	-0.0227	-0.8958	-0.0145	-0.6265	0.4615	-0.2444	0.1411	0.6471	0.6255
N'	-0.0041	0.0071	-0.2994	0.0414	-0.2176	-1.8[illegible]	0.6014	-0.0321	0.0869	-1.7290

*This derivative was transcribed accurately from the original source but exceeds the usual range of values and should be used with due caution.

TABLE V-4 CONTINUED

UH-1H STABILITY AND CONTROL DERIVATIVES -- US UNITS

(BODY-FIXED FRL AXIS SYSTEM)

CASE 134 60 KT -1595 FT/MIN SEA LEVEL 8000 LB MID CG

PHI	THETA	PSI	ALPHA	BETA	GAMMA	0MR	B1S	A1S	0TR
-0.01	3.14	0.00	18.17	-0.03	-15.21	9.44	0.09	-0.51	0.07

XDOT	ZDOT	UO	VO	WO	VTO
97.71	26.63	96.11	-0.01	11.92	101.27

	U	W	Q	V	P	R	DC	DB	DA	DP
X	-0.0179	0.0569	2.5029	0.0001	-1.1904	-0.3643	0.5487	0.8458	-0.0061	-0.0121
Z	-0.0201	-0.8066	-1.6442	-0.0076	-1.2514	1.1946	-11.1286	2.5818	0.0106	0.0525
M	0.0045	-0.0149	-0.6268	-0.0003	0.2055	0.0197	0.0445	-0.1698	0.0006	-0.0024
Y	-0.0033	0.0107	-1.1538	-0.1165	-2.5918	1.4512	0.1500	0.0136	0.9262	2.0480
L'	-0.0019	0.0022	-0.6970	-0.0181	-1.5345	0.2651	0.0830	0.0255	0.5265	0.5291
N'	0.0006	-0.0285	0.1372	0.0135	-0.2801	-1.2678	-0.0662	0.1085	0.0775	-1.5026

CASE 135 100 KT -2946 FT/MIN SEA LEVEL 8000 LB MID CG

PHI	THETA	PSI	ALPHA	BETA	GAMMA	0MR	B1S	A1S	0TR
0.22	1.34	0.00	18.26	0.07	-16.91	7.47	-0.38	0.10	-0.32

XDOT	ZDOT	UO	VO	WO	VTO
161.48	49.10	160.28	0.20	52.87	169.78

	U	W	Q	V	P	R	DC	DB	DA	DP
X	-0.0295	0.0613	3.1881	0.0008	-1.1429	-0.0179	0.4128	0.6761	-0.0155	0.0075
Z	0.0163	-0.8936	-3.8455	0.0019	-1.9296	0.7801	-12.4839	4.4569	-0.0104	-0.0135
M	0.0069	-0.0215	-0.8871	-0.0008	0.2041	0.0052	0.0788	-0.1714	0.0014	-0.0077
Y	-0.0029	0.0166	-1.0911	-0.1660	-3.0138	1.8706	0.2086	-0.0428	0.7497	2.6560
L'	-0.0004	0.0024	-0.6553	-0.0204	-1.7880	0.3306	0.0661	0.0029	0.4764	0.6849
N'	0.0059	-0.0423	0.1548	0.0198	0.0076	-1.6545	-0.3856	0.2395	0.0671	-1.9481

CASE 136 6 KT -600 FT/MIN SEA LEVEL 8000 LB MID CG

PHI	THETA	PSI	ALPHA	BETA	GAMMA	0MR	B1S	A1S	0TR
-0.99	3.56	0.00	93.56	-0.99	-90.00	11.99	-1.85	-1.33	5.56

XDOT	ZDOT	UO	VO	WO	VTO
0.03	10.00	-0.62	-0.16	9.98	10.00

	U	W	Q	V	P	R	DC	DB	DA	DP
X	-0.0098	0.0109	0.3115	-0.0135	-1.4009	-0.2768	0.5962	1.0129	-0.0051	0.0131
Z	-0.0860	-0.1117	-0.0163	-0.1021	-3.1261	2.0856	-9.7761	0.2726	0.0116	0.0170
M	0.0036	-0.0062	-0.2929	0.0012	0.2155	0.0169	0.0059	-0.1677	0.0008	0.0001
Y	0.0176	0.0036	-1.1669	-0.0636	-1.3917	0.0510	-0.2608	0.0145	0.4772	1.5998
L'	0.0008	-0.0019	-0.6021	-0.0126	-0.6700	0.1115	[illegible]	0.0013	0.5577	0.4121
N'	-0.0016	-0.0116	-0.1117	0.0213	[illegible]	[illegible]	0.1917	[illegible]	0.0031	-1.1717

TABLE V-4 CONTINUED

UH-IH STABILITY AND CONTROL DERIVATIVES -- US UNITS

(BODY-FIXED FRL AXIS SYSTEM)

CASE 117   12 KT   -1200 FT/MIN   SEA LEVEL   9000 LB   MID CG

PHI	THETA	PSI	ALPHA	BETA	GAMMA	ΘMR	B1S	A1S	ΘTR
-0.75	1.07	0.00	91.37	-0.78	-90.00	11.52	-1.41	-1.13	4.58

XDOT	ZDOT	U0	V0	W0	VT0
0.00	20.00	-1.37	-0.26	19.97	20.00

	U	W	Q	V	P	R	DC	DB	DA	DP
X	-0.0065	0.0140	0.9729	-0.0138	-1.4171	-0.2198	0.5049	1.0253	-0.0038	0.0261
Z	-0.1137	-0.2920	0.1629	-0.1012	-0.2275	1.9955	-9.7262	0.2674	-0.0048	-0.0369
M	0.0038	-0.0040	-0.3080	0.0018	0.2361	0.0436	0.0158	-0.1667	0.0007	-0.0129
Y	0.0173	0.0076	-1.0592	-0.0425	-1.2173	3.7467	-0.1981	0.0174	0.9710	1.5982
L'	0.0092	-0.0009	-0.7647	-0.0119	-0.7306	0.1103	-0.0694	0.0079	0.5527	0.4102
N'	-0.0000	-0.0129	-0.0904	0.0217	-0.1688	-0.6275	0.3548	-0.0061	0.0772	-1.1733

CASE 118   6 KT   600 FT/MIN   SEA LEVEL   9000 LB   MID CG

PHI	THETA	PSI	ALPHA	BETA	GAMMA	ΘMR	B1S	A1S	ΘTR
-1.25	4.68	0.00	-85.31	1.25	90.00	15.13	-0.37	-1.82	7.04

XDOT	ZDOT	U0	V0	W0	VT0
0.00	-10.00	0.82	0.22	-9.96	10.00

	U	W	Q	V	P	R	DC	DB	DA	DP
X	-0.0132	0.0326	0.6321	-0.0116	-1.3612	-0.3182	0.8081	1.0513	-0.0077	-0.0228
Z	-0.0377	-0.4181	-0.2891	-0.1002	-0.5266	2.3279	-9.9395	0.2697	0.0215	0.0511
M	0.0028	-0.0066	-0.2849	0.0007	0.2329	0.0360	-0.0189	-0.1705	0.0011	0.0355
Y	0.0124	-0.0204	-1.7154	-0.0505	-0.7661	0.9622	-0.3394	0.0136	0.8957	1.6566
L'	0.0071	-0.0039	-0.9826	-0.0142	-0.4886	0.1602	-0.1349	0.0078	0.5705	0.4312
N'	0.0002	0.0059	0.0976	0.0238	-0.3023	-0.7611	0.4881	-0.0026	0.0835	-1.2140

CASE 119   12 KT   1200 FT/MIN   SEA LEVEL   9000 LB   MID CG

PHI	THETA	PSI	ALPHA	BETA	GAMMA	ΘMR	B1S	A1S	ΘTR
-1.44	5.50	0.00	-84.50	1.43	90.00	15.78	0.50	-2.09	7.51

XDOT	ZDOT	U0	V0	W0	VT0
0.00	-20.00	1.92	0.50	-19.90	20.00

	U	W	Q	V	P	R	DC	DB	DA	DP
X	-0.0157	0.0427	0.4637	-0.0105	-1.1362	-0.3859	0.9701	1.0612	-0.0084	-0.0480
Z	-0.0203	-0.4615	-0.3522	-0.0369	-0.6240	2.4894	-9.9136	0.2811	0.0368	0.0745
M	0.0029	-0.0095	-0.2992	0.0006	0.2221	0.0344	-0.0198	-0.1723	0.0011	0.0526
Y	0.0120	-0.0261	-1.7667	-0.0557	-0.6115	1.9844	-0.1951	0.0118	0.9097	1.6935
L'	0.0066	-0.0126	[illegible]	[illegible]	-0.1952	0.1907	-0.1692	0.0065	0.5796	0.4430
N'	-0.0002	0.0197	-0.0015	[illegible]	-0.2947	[illegible]	0.5669	-0.0012	0.0451	-1.2606

TABLE V-4 CONTINUED

UH-1H STABILITY AND CONTROL DERIVATIVES -- US UNITS

(BODY-FIXED FRL AXIS SYSTEM)

CASE 140 60 KT 1200 FT/MIN SEA LEVEL 8000 LB MID CG

PHI	THETA	PSI	ALPHA	BETA	GAMMA	OMR	B1S	A1S	OTR
-0.85	4.60	-1.13	-6.78	1.21	11.39	14.72	2.57	-2.30	4.12

XDOT	ZDOT	U0	V0	W0	VT0
99.27	-20.00	100.54	2.14	-11.95	101.27

	U	W	Q	V	P	R	DC	DB	DA	DP
X	-0.0255	0.0754	1.2017	0.0065	-1.1646	-0.3686	0.9912	0.8836	-0.0196	-0.0915
Z	0.0291	-0.9658	-1.8576	-0.0176	-1.9860	2.4571	-11.5340	2.7460	0.0510	-0.0801
M	0.0035	-0.0057	-0.4933	0.0012	0.1990	0.0351	0.3051	-0.1828	0.0016	-0.0159
Y	0.0039	-0.0172	-1.3222	-0.1110	-1.3106	1.6515	-0.2692	0.0842	0.9309	1.9201
L'	0.0005	-0.0119	-0.8304	-0.0133	-0.7994	0.3247	-0.0967	0.0519	0.5926	0.4997
N'	-0.0059	-0.0016	-0.3816	0.0349	-0.2767	-1.3496	0.4301	0.0165	0.3832	-1.4081

CASE 141 60 KT 600 FT/MIN SEA LEVEL 8000 LB MID CG

PHI	THETA	PSI	ALPHA	BETA	GAMMA	OMR	B1S	A1S	OTR
-0.89	4.20	0.00	-1.47	0.02	5.67	13.65	2.09	-1.90	2.99

XDOT	ZDOT	U0	V0	W0	VT0
100.77	-10.00	101.23	0.04	-2.59	101.27

	U	W	Q	V	P	R	DC	DB	DA	DP
X	-0.0262	0.0656	1.2788	0.0030	-1.1655	-0.3201	0.8580	0.8515	-0.0155	-0.0768
Z	0.0199	-0.8727	-1.7199	-0.0296	-1.6325	2.1966	-11.5388	2.7992	-0.0034	-0.0560
M	0.0035	-0.0033	-0.4893	0.0011	0.2046	0.0165	0.0088	-0.1779	0.0017	-0.0129
Y	0.0029	-0.0114	-1.2825	-0.1273	-1.6099	1.5733	-0.1627	0.0652	0.9022	1.9295
L'	-0.0003	-0.0086	-0.7929	-0.0145	-0.9569	0.3074	-0.0500	0.0458	0.5743	0.5019
N'	-0.0043	-0.0081	-0.0111	0.0340	-0.2212	-1.3072	0.3214	0.0351	0.0809	-1.4146

CASE 142 60 KT -600 FT/MIN SEA LEVEL 8000 LB MID CG

PHI	THETA	PSI	ALPHA	BETA	GAMMA	OMR	B1S	A1S	OTR
-0.32	3.73	-0.40	9.17	0.35	-5.67	11.48	1.11	-1.09	1.38

XDOT	ZDOT	U0	V0	W0	VT0
100.77	10.00	99.92	0.61	16.40	101.27

	U	W	Q	V	P	R	DC	DB	DA	DP
X	-0.0225	0.0479	1.9609	0.0022	-1.1868	-0.2103	0.7692	0.8211	-0.0167	-0.0273
Z	0.0048	-0.9613	-1.6736	-0.0178	-1.5611	1.6119	-11.4367	2.7567	0.0000	-0.0625
M	0.0029	-0.0027	-0.5577	0.0007	0.2066	0.0167	0.0179	-0.1790	0.0020	-0.0111
Y	-0.0015	0.0021	-1.2169	-0.1220	-2.1655	1.6716	0.3105	0.0224	0.8678	1.9767
L'	-0.0016	-0.0021	[illegible]	-0.0171	-1.2087	0.2756	0.0232	0.0253	0.5690	0.5122
N'	[illegible]	[illegible]	-0.0011	0.0112	-0.1611	-1.2674	0.1710	0.0767	0.0775	-1.4500

MICROFILMED FROM
BEST AVAILABLE COPY

TABLE V-4 CONTINUED
UH-IH STABILITY AND CONTROL DERIVATIVES -- US UNITS
(BODY-FIXED FRL AXIS SYSTEM)

CASE 143 60 KT -1200 FT/MIN SEA LEVEL 8000 LB MID CG

PHI	THETA	PSI	ALPHA	BETA	GAMMA	OMR	B1S	A1S	OTR
-0.17	3.53	0.00	14.92	-0.04	-11.39	13.37	0.79	-0.74	0.53

XDOT	ZDOT	UO	VO	WO	VTO
99.27	20.00	97.85	-0.08	26.08	101.27

	U	W	Q	V	P	R	DC	DB	DA	DP
X	-0.0203	0.0672	2.2923	0.0007	-1.1963	-0.1974	0.6727	0.8204	-0.0114	-0.0176
Z	-0.0057	-0.8364	-1.7162	-0.0118	-1.1874	1.3699	-11.2593	2.6491	-0.0027	0.0092
M	0.0026	-0.0061	-0.5973	0.0005	0.2079	0.0197	0.0263	-0.1674	0.0014	-0.0072
Y	-0.0026	0.0077	-1.1918	-0.1213	-2.4156	1.4529	0.0953	0.0121	0.8309	2.0109
L'	-0.0018	0.0007	-0.7367	-0.0182	-1.4369	0.2693	0.0594	0.0225	0.5293	0.5203
N'	-0.0001	-0.0256	0.0371	0.0332	-0.1099	-1.2633	-0.0002	0.0952	0.0768	-1.4751

CASE 144 0 KT LEVEL FLIGHT 10000 FT 8000 LB MID CG

PHI	THETA	PSI	ALPHA	BETA	GAMMA	OMR	B1S	A1S	OTR
-1.22	4.12	0.00	4.12	-0.09	0.00	16.10	-0.89	-1.74	8.54

XDOT	ZDOT	UO	VO	WO	VTO
0.00	0.00	0.00	0.00	0.00	0.00

	U	W	Q	V	P	R	DC	DB	DA	DP
X	-0.0154	0.0178	1.2194	-0.0016	-1.3045	-0.2615	0.5361	1.0683	-0.0054	-0.0015
Z	-0.0395	-0.2959	0.1279	-0.0711	-0.2171	2.2475	-7.5066	0.2488	0.0080	0.0191
M	0.0028	-0.0050	-0.3361	-0.0009	0.2125	0.0365	-0.0049	-0.1731	0.0009	0.0176
Y	0.0159	-0.0046	-1.2025	-0.0280	-1.2566	0.6884	-0.2500	0.0102	0.9039	1.3056
L'	0.0095	-0.0044	-0.7510	-0.0041	-0.8090	0.0838	-0.0871	0.0063	0.5763	0.3387
N'	0.0006	-0.0044	0.0016	0.0189	-0.3646	-0.6399	0.4378	-0.0092	0.0864	-0.9575

CASE 145 60 KT LEVEL FLIGHT 10000 FT 8000 LB MID CG

PHI	THETA	PSI	ALPHA	BETA	GAMMA	OMR	B1S	A1S	OTR
-0.71	3.98	0.00	3.98	-0.05	0.00	11.95	2.00	-1.78	3.09

XDOT	ZDOT	UO	VO	WO	VTO
101.27	0.00	101.02	-0.09	7.02	101.27

	U	W	Q	V	P	R	DC	DB	DA	DP
X	-0.0210	0.0382	2.1171	-0.0002	-1.2219	-0.2449	0.4447	0.9371	-0.0135	-0.0581
Z	-0.0085	-0.6122	-1.8525	-0.0195	-1.1264	1.9421	-8.2004	2.0299	0.0097	-0.0340
M	0.0034	-0.0009	-0.5292	0.0011	0.2036	0.0055	0.0117	-0.1799	0.0016	-0.0139
Y	0.0001	-0.0074	-1.1611	-0.0979	-2.2679	1.0660	-0.0462	0.0463	0.8889	1.4399
L'	-0.0016	-0.0036	-0.7099	-0.0151	-1.4341	0.1639	0.0126	0.0364	0.5655	0.3732
N'	-0.0012	-0.0120	0.1157	0.0242	-0.3543	-1.0229	0.2594	0.0500	0.0809	-1.0555

TABLE V-4 CONTINUED

UH-1H STABILITY AND CONTROL DERIVATIVES -- US UNITS

(BODY-FIXED FRL AXIS SYSTEM)

CASE 146 100 KT LEVEL FLIGHT 10000 FT 9000 LB MID CG

PHI	THETA	PSI	ALPHA	BETA	GAMMA	RHP	BIS	AIS	BTB
-0.97	3.29	0.00	3.25	-0.06	0.00	16.61	4.72	-1.87	3.31

XDOT	ZDOT	UO	VO	WO	VTO
168.79	0.00	168.50	-0.16	9.65	168.78

	U	W	Q	V	P	R	DC	DB	DA	DP
X	-0.0373	0.0461	2.4377	0.0061	-1.1061	-0.2195	0.4979	0.8721	-0.0387	-0.1761
Z	0.0568	-0.6733	-1.9878	-0.0201	-1.7900	2.9831	-8.9993	1.5076	-0.2026	-0.0186
M	0.0065	-0.0073	-0.6820	0.0006	0.1461	0.0177	0.0289	-0.1886	0.0018	0.0230
Y	0.0030	-0.0129	-1.1392	-0.1398	-2.2133	1.4509	-0.1853	0.1132	0.9066	1.8556
L'	0.0010	-0.0102	-0.7113	-0.0170	-1.3529	0.2652	-0.0780	0.0810	0.5759	0.4861
N'	0.0000	-0.0120	-0.0582	0.0290	-0.2899	-1.3526	0.2621	0.0755	0.0806	-1.3558

CASE 147 20 KT 1992 FT/MIN 10000 FT 9000 LB MID CG

PHI	THETA	PSI	ALPHA	BETA	GAMMA	RHP	BIS	AIS	BTB
-1.86	6.62	0.00	-83.18	1.84	90.00	18.29	1.66	-2.65	11.06

XDOT	ZDOT	UO	VO	WO	VTO
0.00	-33.20	3.83	1.07	-32.96	33.20

	U	W	Q	V	P	R	DC	DB	DA	DP
X	-0.0206	0.0427	0.5659	-0.0101	-1.3239	-0.4619	0.8920	1.0811	-0.0218	-0.0917
Z	-0.0018	-0.3783	-0.0775	-0.0731	-0.6695	2.6833	-7.4000	0.3683	0.1018	0.2652
M	0.0035	-0.0115	-0.3315	0.0006	0.2106	1.0517	-0.0536	-0.1761	0.0038	0.0782
Y	0.0130	-0.0249	-1.6953	-0.0563	-0.7206	1.0071	-0.3828	0.0244	0.9635	1.3678
L'	0.0072	-0.0118	-1.0257	-0.0176	-0.4795	0.1701	-0.1610	0.0150	0.6009	0.3601
N'	0.0000	0.0119	-0.2456	0.0232	-0.4186	-0.8528	0.6056	-0.0022	0.0861	-0.9981

CASE 148 60 KT 2102 FT/MIN 10000 FT 9000 LB MID CG

PHI	THETA	PSI	ALPHA	BETA	GAMMA	RHP	BIS	AIS	BTB
-1.65	2.72	0.00	-17.92	0.51	20.64	17.03	1.63	-3.29	8.15

XDOT	ZDOT	UO	VO	WO	VTO
96.77	-35.70	96.35	0.90	-31.15	101.27

	U	W	Q	V	P	R	DC	DB	DA	DP
X	-0.0301	0.1120	1.0099	0.0027	-1.1962	-0.3161	0.1187	1.0494	-0.0163	-0.1533
Z	0.0020	-0.5708	-2.1938	-0.0362	-1.2018	2.5581	-7.9739	1.8556	0.2539	-0.0875
M	0.0005	-0.0035	-0.1600	0.0025	0.1074	-0.0168	0.0191	-0.1921	0.0017	0.0068
Y	0.0069	-0.1135	-1.4360	-0.1068	-3.9700	1.1606	-0.2980	0.0017	0.9635	1.1602
L'	-0.0000	-0.0192	-1.0119	-0.0126	-0.6194	0.2275	-0.0850	0.0601	0.6112	0.3500
N'	-0.0070	0.0105	0.1070	[illegible]	-0.4730	-1.1715	[illegible]	-0.0171	0.0063	-0.9996

TABLE V-4 CONTINUED
UH-1H STABILITY AND CONTROL DERIVATIVES -- US UNITS
(BODY-FIXED FRL AXIS SYSTEM)

CASE 149 60 KT -1602 FT/MIN 10000 FT 9000 LB MID CG

PHI	THETA	PSI	ALPHA	BETA	GAMMA	GRR	B1S	A1S	GTR
-0.03	3.38	0.00	18.66	-0.01	-15.29	11.06	0.61	-0.80	0.16

XDOT	ZDOT	UO	VO	WO	VTO
97.69	26.73	95.94	-0.02	12.41	101.27

	U	W	Q	V	P	R	DC	DB	DA	DP
X	-0.0168	0.0343	2.8666	-0.0020	-1.1877	-0.1604	0.1107	0.9336	-0.0067	-0.0098
Z	-0.0350	-0.5680	-1.8635	-0.0088	-0.8761	1.4792	-8.0069	1.8336	0.0295	0.0553
M	0.0043	-0.0106	-0.6159	0.0001	0.2021	0.0167	0.0465	-0.1746	0.0007	-0.0016
Y	-0.0040	0.0088	-1.1071	-0.0901	-2.8691	1.0177	0.1365	0.0201	0.8601	1.5180
L'	-0.0025	0.0021	-0.6555	-0.0161	-1.7581	0.1512	0.0927	0.0260	0.5484	0.3924
N'	-0.0004	-0.0214	0.2162	0.0247	-0.2122	-0.9859	0.0490	0.0853	0.0818	-1.1139

CASE 150 100 KT -2820 FT/MIN 10000 FT 8000 LB MID CG

PHI	THETA	PSI	ALPHA	BETA	GAMMA	GRR	B1S	A1S	GTR
0.23	2.05	0.00	18.22	0.07	-16.17	9.04	1.12	-0.09	-0.54

XDOT	ZDOT	UO	VO	WO	VTO
162.10	47.00	160.32	0.21	52.76	168.78

	U	W	Q	V	P	R	DC	DB	DA	DP
X	-0.0263	0.0378	3.5152	-0.0002	-1.1592	-0.0923	0.1986	0.7920	-0.0229	0.0217
Z	0.0097	-0.6167	-3.6774	-0.0008	-1.3302	1.2109	-8.9778	3.1677	-0.0070	-0.0645
M	0.0057	-0.0150	-0.8305	-0.0005	0.2014	0.0104	0.0742	-0.1752	0.0024	-0.0078
Y	-0.0028	0.0100	-1.0986	-0.1273	-3.2797	1.3088	0.1302	-0.0336	0.7875	1.9696
L'	-0.0006	0.0014	-0.6499	-0.0179	-1.9824	0.1856	0.0491	0.0058	0.5000	0.5090
N'	0.0047	-0.0306	0.2285	0.0291	-0.1069	-1.2729	-0.1976	0.1778	0.0687	-1.4452

CASE 151 1 KT LEVEL FLIGHT AT SEA LEVEL 8000 LB FWD CG

PHI	THETA	PSI	ALPHA	BETA	GAMMA	GRR	B1S	A1S	GTR
-1.06	-0.72	0.00	-0.72	0.01	0.00	14.49	-5.55	-1.55	6.40

XDOT	ZDOT	UO	VO	WO	VTO
1.69	0.00	1.69	0.00	-0.02	1.69

	U	W	Q	V	P	R	DC	DB	DA	DP
X	-0.0131	-0.0061	0.6346	-0.0155	-1.4136	-0.1180	-0.1727	1.0696	-0.0041	-0.0005
Z	-0.1556	-0.1906	0.1755	-0.0951	-0.1569	2.1991	-9.8511	0.3022	0.0065	0.0014
M	0.0020	-0.0040	-0.2647	0.0016	0.2137	0.0248	0.0027	-0.1698	0.0007	0.0151
Y	0.0137	-0.0049	-1.1289	-0.0449	-0.3841	0.9012	-0.2924	0.0366	0.8816	1.6299
L'	0.0067	-0.0049	-0.7328	-0.0121	-0.5732	0.1382	-0.1110	0.0095	0.5552	0.4101
N'	-0.0022	-0.0062	0.8065	0.0214	-0.3111	-0.7369	0.4471	-0.0027	0.0680	-1.2225

TABLE V-4 CONTINUED

UH-IH STABILITY AND CONTROL DERIVATIVES -- US UNITS

(BODY-FIXED FRL AXIS SYSTEM)

CASE 352 60 KT LEVEL FLIGHT AT SEA LEVEL 8000 LB FWD CG

PHI	THETA	PSI	ALPHA	BETA	GAMMA	DCP	B1S	A1S	DTP
-0.21	-0.47	0.00	-0.47	0.01	0.00	12.61	-2.57	-1.42	2.05

XDOT	ZDOT	U0	V0	W0	VTO
101.27	0.03	101.26	0.01	-0.83	101.27

	U	W	Q	V	P	R	DC	DB	DA	DP
X	-0.0242	-0.0031	1.5951	0.0006	-1.1366	-0.9906	-0.1136	1.0701	-0.0142	-0.0567
Z	-0.0485	-0.0792	-1.0067	-0.0217	-1.6517	2.0835	-11.9867	2.7991	-0.3053	-0.0997
M	0.0036	-0.0042	-0.5520	0.0009	0.2265	0.0299	0.9097	-0.1710	0.0015	-0.0105
Y	0.0003	-0.0051	-1.2536	-0.1260	-1.9016	1.5636	-0.3766	0.0677	0.8879	1.9666
L*	-0.0016	-0.0058	-0.6670	-0.0132	-1.1195	0.2991	-0.3131	0.0383	0.5588	0.6927
N*	-0.0038	-0.0149	0.7751	0.0366	-0.1666	-1.3672	0.2126	0.0579	0.0665	-1.0586

CASE 353 100 KT LEVEL FLIGHT AT SEA LEVEL 8000 LB FWD CG

PHI	THETA	PSI	ALPHA	BETA	GAMMA	DCP	B1S	A1S	DTP
-0.89	-0.77	0.00	-0.77	0.01	0.00	13.57	0.79	-1.66	2.63

XDOT	ZDOT	U0	V0	W0	VTO
168.78	0.00	168.76	0.04	-2.27	168.78

	U	W	Q	V	P	R	DC	DB	DA	DP
X	-0.0383	0.0267	1.6065	0.0063	-1.2136	-0.1696	0.2196	0.9611	-0.0191	-0.1628
Z	0.0175	-1.0009	-3.7163	-0.0267	-2.6913	2.4357	-13.1603	5.0505	-0.0369	-0.0867
M	0.0058	-0.0101	-0.7558	0.0002	0.1608	0.0212	-0.0470	-0.1589	0.0013	0.0037
Y	0.0022	-0.0187	-1.2113	-0.1833	-1.0990	2.1063	-0.2398	0.1336	0.9359	2.4776
L*	0.0307	-0.0142	-0.6833	-0.0139	-1.0959	0.3915	-0.1138	0.0966	0.5886	0.6297
N*	0.0001	-0.0151	0.6697	0.0066	-0.1252	-1.7961	0.2201	0.0811	0.0676	-1.0552

CASE 354 1 KT LEVEL FLIGHT AT SEA LEVEL 8000 LB AFT CG

PHI	THETA	PSI	ALPHA	BETA	GAMMA	DCP	B1S	A1S	DTP
-1.08	8.74	0.00	8.74	-0.17	0.00	16.51	1.76	-1.66	6.09

XDOT	ZDOT	U0	V0	W0	VTO
1.69	0.00	1.67	-0.00	0.26	1.69

	U	W	Q	V	P	R	DC	DB	DA	DP
X	-0.0032	0.0551	0.5925	-0.0491	-1.1166	-0.5062	1.5101	1.0316	-0.0082	-0.0959
Z	-0.0411	-0.1761	0.1509	0.0224	-0.6165	2.1296	-9.7071	0.2967	0.0138	0.0227
M	0.0311	-0.0066	-0.2576	0.0517	0.2166	0.0610	-0.0099	-0.1711	0.0011	0.0156
Y	0.0165	-0.0033	[illegible]	-0.0136	-0.9901	0.9525	-0.2876	0.9134	0.0866	1.6171
L*	0.0608	-0.0068	[illegible]	0.9125*	[illegible]	[illegible]	-0.1111	0.0070	0.5696	0.6956
N*	-0.0511	[illegible]	[illegible]	0.3167	[illegible]	[illegible]	0.1111	-0.0071	0.0970	-1.1795

*This derivative was transcribed accurately from the original source but exceeds the usual range of values and should be used with due caution.

TABLE V-4 CONTINUED

UH-1H STABILITY AND CONTROL DERIVATIVES -- US UNITS

(BODY-FIXED FRL AXIS SYSTEM)

CASE 155 60 KT LEVEL FLIGHT AT SEA LEVEL 8000 LB AFT CG

PHI	THETA	PSI	ALPHA	BETA	GAMMA	ANP	B1S	A1S	PTP
-0.49	8.20	0.00	8.20	-0.10	0.00	12.42	6.00	-1.50	2.17

XDOT	ZDOT	U0	V0	W0	VT0
101.27	0.00	100.23	-0.17	14.44	101.27

	U	W	Q	V	P	R	DC	DB	DA	DP
X	-0.0343	0.1121	1.7362	0.0061	-0.9871	-3.4255	1.7211	0.6964	-0.0144	-0.0555
Z	0.0492	-0.8647	-1.6576	-0.0251	-1.9942	1.7325	-11.4366	2.8382	-0.0150	-0.0387
M	0.0027	-0.0015	-0.5076	0.0009	3.7056	0.0164	0.0165	-0.1787	0.0021	-0.0168
Y	0.0021	-0.0061	-1.2283	-0.1238	-1.9919	1.6595	-0.0865	0.0550	0.8599	1.9521
L'	-0.0001	-0.0065	-0.9078	-0.0186	-1.1612	0.2920	-0.0213	0.0611	0.5538	0.5189
N'	-0.0017	-0.0169	-0.9290	0.0106	-0.2299	-1.2229	0.2072	0.0573	0.3935	-1.3987

CASE 156 100 KT LEVEL FLIGHT AT SEA LEVEL 8000 LB AFT CG

PHI	THETA	PSI	ALPHA	BETA	GAMMA	ANP	B1S	A1S	PTP
-1.02	6.69	0.00	6.69	-0.12	0.00	11.31	8.17	-1.88	2.48

XDOT	ZDOT	U0	V0	W0	VT0
168.78	0.00	167.63	-0.35	19.66	168.78

	U	W	Q	V	P	R	DC	DB	DA	DP
X	-0.0601	0.1580	1.9010	0.0089	-3.7112	-0.4469	2.0743	0.1626	-0.0149	-0.1490
Z	0.1402	-0.9843	-3.1916	-0.0109	-1.1810	1.9990	-13.0462	5.0968	-0.0372	-0.0482
M	0.0041	-0.0039	-0.6556	0.0006	3.1858	0.0166	-0.0008	-0.1866	0.0017	-0.0053
Y	0.0061	-0.0210	-1.2931	-0.1802	-1.8195	1.9606	-0.2781	0.1565	0.8681	2.6891
L'	0.0032	-0.0156	-3.9976	-0.0216	-1.0767	0.3916	-0.1636	0.1091	0.5575	0.6636
N'	0.0016	-0.0147	-0.9365	0.0362	-0.1938	-1.6241	0.2029	0.0096	0.0926	-1.7807

CASE 157 1 KT LEVEL FLIGHT AT SEA LEVEL 6500 LB MID CG

PHI	THETA	PSI	ALPHA	BETA	GAMMA	ANP	B1S	A1S	PTP
-1.87	4.24	0.00	4.24	-0.08	0.00	11.62	-0.72	-1.50	5.45

XDOT	ZDOT	U0	V0	W0	VT0
1.69	0.00	1.68	-0.00	0.12	1.69

	U	W	Q	V	P	R	DC	DB	DA	DP
X	0.0001	0.0119	0.4?60	-0.0151	-1.5635	-1.1120	0.8661	1.0295	-0.0055	-0.0017
Z	-0.1214	-0.4598	0.2695	-0.1176	-5.6011	0.6611	-11.5711	0.2997	0.0086	0.0070
M	0.0009	-0.0042	-0.2349	-0.0067	0.2102	-0.5526*	-0.0030	-0.1361	0.0007	0.0111
Y	0.0166	-0.0019	-1.6329	-0.0652	-0.6171	1.0216	-0.3169	0.0171	0.0750	1.9600
L'	[illegible]	-0.0050	[illegible]	-0.0129	[illegible]	-0.1297*	[illegible]	0.0076	0.6019	0.1769
N'	-0.0020	[illegible]	-0.1161	0.0110	-0.1619	[illegible]	0.1116	-0.0011	0.1729	-1.2637

*This derivative was transcribed accurately from the original source but exceeds the usual range of values and should be used with due caution.

TABLE V-4 CONTINUED
UH-1H STABILITY AND CONTROL DERIVATIVES -- US UNITS
(BODY-FIXED FRL AXIS SYSTEM)

CASE 158 60 FT LEVEL FLIGHT AT SEA LEVEL 6500 LB MID CG

PHI	THETA	PSI	ALPHA	BETA	GAMMA	QHR	P1S	A1S	QTR
-0.72	3.97	0.00	3.97	-0.05	0.00	11.96	1.98	-1.42	1.82

XDOT	ZDOT	UO	VO	WO	VTO
101.27	0.00	101.01	-0.09	7.31	101.27

	U	W	Q	V	P	R	DC	DB	DA	DP
X	-0.0290	0.0945	1.6433	0.0041	-1.3068	-0.2866	1.1884	0.7380	-0.0057	-0.0651
Z	0.0382	-1.0862	-2.1576	-0.0271	-2.0975	1.8891	-14.2288	3.4718	0.0268	-0.0122
M	0.0028	-0.0038	-0.4831	0.0007	0.1892	0.0114	-0.0071	-0.1390	0.0006	-0.0123
Y	0.0021	-0.0092	-1.4426	-0.1503	-1.9073	1.9030	-0.1210	0.0642	0.8805	2.4072
L'	-0.0002	-0.0077	-0.8033	-0.0111	-0.9716	0.2618	-0.0307	0.0443	0.4877	0.4633
N'	-0.0019	-0.0132	-0.1668	0.0364	-0.1677	-1.3532	0.1764	0.0521	0.0759	-1.5267

CASE 159 100 FT LEVEL FLIGHT AT SEA LEVEL 6500 LB MID CG

PHI	THETA	PSI	ALPHA	BETA	GAMMA	QHR	P1S	A1S	QTR
-1.14	2.81	0.00	2.81	-0.06	0.00	12.96	4.83	-1.86	2.26

XDOT	ZDOT	UO	VO	WO	VTO
168.78	0.00	168.58	-0.16	8.29	168.78

	U	W	Q	V	P	R	DC	DB	DA	DP
X	-0.0564	0.1363	1.7292	0.0090	-1.0284	-0.3449	1.7660	0.3117	-0.0392	-0.1654
Z	0.1276	-1.2349	-4.3261	-0.0374	-3.6710	2.2441	-16.2355	6.2531	-0.0422	-0.0602
M	0.0049	-0.0091	-0.6601	0.0002	0.1613	0.0158	-0.0629	-0.1288	0.0012	-0.0026
Y	0.0060	-0.0281	-1.4477	-0.2205	-1.8100	2.5279	-0.3802	0.1930	0.9031	3.0621
L'	0.0027	-0.0175	-0.8635	-0.0115	-0.9015	0.3514	-0.1626	0.1135	0.4989	0.5913
N'	0.0013	-0.0194	-0.4768	0.0440	-0.1560	-1.8071	0.2196	0.0569	0.0747	-1.9397

CASE 160 1 FT LEVEL FLIGHT AT SEA LEVEL 6500 LB FWD CG

PHI	THETA	PSI	ALPHA	BETA	GAMMA	QHR	P1S	A1S	QTR
-1.06	-0.72	0.00	-0.72	0.01	0.00	13.59	-5.61	-1.45	5.41

XDOT	ZDOT	UO	VO	WO	VTO
1.69	0.00	1.69	0.00	-0.02	1.69

	U	W	Q	V	P	R	DC	DB	DA	DP
X	-0.0126	-0.0074	0.4899	-0.0255	-1.5994	-0.0410	-0.2177	1.0568	-0.0038	-0.0002
Z	-0.1936	-0.4665	0.4254	-0.1345	-0.1690	2.1922	-11.6440	0.3181	0.0197	0.0140
M	0.0010	-0.0041	-0.2174	-0.0049	0.2381	-0.0264	0.0046	-0.1366	0.0006	0.0132
Y	0.0130	-0.0039	-1.4865	-0.0447	-0.6177	1.0939	-0.1172	0.0214	0.8733	1.9615
L'	0.0048	-0.0050	-0.6700	-0.0121	-0.4127	0.3149	-0.0348	0.0089	0.4762	0.3618
N'	-0.0026	-0.0065	0.4651	0.0399	-0.3846	-0.7516	0.3911	-0.0065	0.0600	-1.2728

MICROFILMED FROM
BEST AVAILABLE COPY

TABLE V-4 CONTINUED
UH-1H STABILITY AND CONTROL DERIVATIVES -- US UNITS
(BODY-FIXED FRL AXIS SYSTEM)

CASE 161 60 KT LEVEL FLIGHT AT SEA LEVEL 6500 LB FWD CG

PHI	THETA	PSI	ALPHA	BETA	GAMMA	OMR	B1S	A1S	OTR
-0.64	-0.52	0.00	-0.52	0.01	0.00	11.92	-2.56	-1.36	1.76

XDOT	ZDOT	UO	VO	WO	VTO
101.27	0.00	101.26	0.01	-0.92	101.27

	U	W	Q	V	P	R	DC	DB	DA	DP
X	-0.0261	0.0259	1.4851	0.0019	-1.4095	-3.1764	0.0077	1.0332	-0.0960	-0.0608
Z	-0.0353	-1.0930	-2.3887	-0.0250	-1.7795	2.9059	-16.3120	3.4530	-0.0955	-0.0601
M	0.0232	-0.0055	-0.5133	0.0006	0.1099	0.0115	-0.0136	-0.1339	0.0013	-0.0103
Y	0.0318	-0.0086	-1.4573	-0.1538	-1.9168	1.9751	-0.1113	0.0572	0.8833	2.4029
L'	-0.0309	-0.0072	-0.6367	-0.0061	-0.9626	0.2527	-0.0263	0.0402	0.4923	0.4478
N'	-0.2020	-0.0113	0.7137	0.0395	-0.1361	-1.4262	0.1798	0.0518	0.0595	-1.5593

CASE 162 35 KT 3564 FT/MIN SEA LEVEL 6500 LB FWD CG

PHI	THETA	PSI	ALPHA	BETA	GAMMA	OMR	B1S	A1S	OTR
-2.37	7.88	0.00	-82.11	2.35	90.00	18.06	2.93	-1.12	8.05

XDOT	ZDOT	UO	VO	WO	VTO
0.00	-59.40	8.16	2.44	-58.79	59.40

	U	W	Q	V	P	R	DC	DB	DA	DP
X	-0.0117	0.1094	-6.2329*	0.0027	-1.4479	-0.2381	1.0256	1.1622	-0.0292	-0.1916
Z	0.0498	-0.7809	-4.9112	-0.1008	-1.2096	3.7371	-12.7978	0.4010	0.1406	0.1588
M	0.0016	-0.0285	-2.0568	0.0002	0.1686	0.0756	-0.2675	-0.1051	0.0041	0.1256
Y	0.0096	-0.0592	-1.9781	-0.0936	0.5706	2.1289	-0.7086	3.0298	0.9930	2.1633
L'	0.0053	-0.0213	-2.4860	-0.0170	0.2907	0.2966	-0.2566	0.0166	0.5417	0.4097
N'	-0.0210	0.0355	-0.3136	0.0425	-0.3554	-1.3170	0.0677	0.0041	0.0632	-1.3055

CASE 163 60 KT 3240 FT/MIN SEA LEVEL 6500 LB FWD CG

PHI	THETA	PSI	ALPHA	BETA	GAMMA	OMR	B1S	A1S	OTR
-2.09	1.85	0.00	-28.36	0.99	12.22	17.50	2.51	-1.49	6.26

XDOT	ZDOT	UO	VO	WO	VTO
85.67	-54.30	89.19	1.76	-48.09	101.27

	U	W	Q	V	P	R	DC	DB	DA	DP
X	-0.0351	0.0301	-0.2367	0.0009	-1.2912	-0.5915	1.2131	0.9691	-0.0262	-0.2091
Z	0.0768	-0.9749	-2.4570	-0.0690	-2.2183	1.7982	-16.2521	2.9060	0.1176	0.0369
M	-0.0062	-0.0459	-0.1208	0.0027	0.1536	0.0497	-0.1712	-0.1216	0.0031	0.0369
Y	0.0118	-0.0515	-1.1767	-0.1257	0.0711	2.5781	-0.7130	3.1610	1.0333	2.1271
L'	0.0137	-0.0196	-0.3513	-0.0129	0.3551	0.2651	-0.2108	0.0839	0.5531	0.4461
N'	-0.0395	0.0277	0.0169	0.0509	-0.1167	-1.4171	0.0229	-0.0546	0.0612	-1.5050

*This derivative was transcribed accurately from the original source but exceeds the usual range of values and should be used with due caution.

TABLE V-4 CONTINUED

UH-1H STABILITY AND CONTROL DERIVATIVES -- US UNITS

(BODY-FIXED FRL AXIS SYSTEM)

CASE 164* 31 KT -3820 FT/MIN SEA LEVEL 6500 LB FWD CG

PHI	THETA	PSI	ALPHA	BETA	GAMMA	RHO	B1S	A1S	BTR
0.00	-2.44	0.00	87.56	0.00	-90.00	9.44	-7.68	-0.14	-0.01

XDOT	ZDOT	UO	VO	WO	VTO
0.00	52.00	2.21	0.00	51.95	52.00

	U	W	Q	V	P	R	DC	DB	DA	DP
X							-0.3600	0.0298	-0.4501	-0.0105
Z							-6.0017	0.2970	0.1838	0.0000
M							0.0354	-0.0024	0.0601	0.0014
Y							0.0204	0.5596	0.0140	4.5921
L'							0.0306	0.1510	0.0052	0.8292
N'							0.1113	-0.7594	-0.0117	-2.9768

CASE 165 60 KT -1830 FT/MIN SEA LEVEL 6500 LB FWD CG

PHI	THETA	PSI	ALPHA	BETA	GAMMA	RHO	B1S	A1S	BTR
0.05	-1.41	0.00	16.09	0.01	-17.53	8.47	-4.80	-0.25	-0.08

XDOT	ZDOT	UO	VO	WO	VTO
96.57	30.50	97.30	0.02	28.07	101.27

	U	W	Q	V	P	R	DC	DB	DA	DP
X	-0.0218	-0.0056	2.6907	0.0011	-1.5058	-0.0331	-0.4310	1.0406	-0.0101	0.0031
Z	-0.0790	-1.0168	-2.4158	-0.0051	-1.2406	1.0236	-13.8883	1.1238	-0.0074	0.0244
M	0.0026	-0.0094	-0.6238	-0.0001	0.1951	0.0154	0.0383	-0.1112	0.0009	-0.0010
Y	-0.0026	0.0139	-1.3567	-0.1439	-2.9394	1.8732	0.1811	0.0031	0.7987	2.5372
L'	-0.0013	0.0014	-0.5345	-0.0125	-1.4796	0.2276	0.0635	0.0244	0.4371	0.4691
N'	-0.0008	-0.0313	0.9852	0.0379	-0.0071	-1.4083	-0.1734	0.1170	0.0568	-1.6469

CASE 166 1 KT LEVEL FLIGHT AT SEA LEVEL 6500 LB AFT CG

PHI	THETA	PSI	ALPHA	BETA	GAMMA	RHO	B1S	A1S	BTR
-1.08	9.14	0.00	9.14	-0.17	0.00	13.61	4.14	-1.55	5.48

XDOT	ZDOT	UO	VO	WO	VTO
1.69	0.00	1.67	-0.01	0.27	1.69

	U	W	Q	V	P	R	DC	DB	DA	DP
X	0.0001	0.0690	0.4405	0.0040	-1.4047	-0.5994	1.8897	1.0128	-0.0105	-0.0136
Z	-0.0538	-0.4474	0.1369	-0.1251	-0.7514	2.0847	-11.4495	0.3131	0.0300	0.0681
M	0.0008	-0.0041	-0.2040	0.0004	0.2191	0.0376	-0.0105	-0.1375	0.0010	0.0136
Y	0.0362	-0.0037	-1.5012	-0.0474	-0.6302	1.0349	-0.1147	0.0159	0.8742	1.9640
L'	0.0069	-0.0050	-1.0541	-0.0100	-0.4229	0.1190	-0.0906	0.0070	0.4947	0.1895
N'	-0.0015	-0.0066	-1.0659	0.0194	-0.3905	-0.6932	0.1790	-0.0028	0.0852	-1.2171

*Stability derivatives for Case Number 164 were omitted in the basic data source (Ref. 5), however, the remaining data were transcribed and presented here.

TABLE V-4 CONTINUED

UH-1H STABILITY AND CONTROL DERIVATIVES -- US UNITS

(BODY-FIXED FRL AXIS SYSTEM)

CASE 357 60 KT LEVEL FLIGHT AT SEA LEVEL 9500 LB AFT CG

PHI	THETA	PSI	ALPHA	BETA	GAMMA	[illegible]	B1S	A1S	[illegible]
-0.78	9.34	0.00	9.34	-0.11	0.00	11.47	6.31	-1.51	1.91

XDOT	ZDOT	U0	V0	W0	VT0
101.27	0.00	100.29	-0.37	16.49	101.27

	U	W	Q	V	P	R	DC	DB	DA	DP
X	-0.0469	0.1784	1.7676	0.0064	-1.2933	-3.6371	2.9549	0.6617	-0.9999	-0.0630
Z	0.1130	-1.0696	-1.9977	-0.0291	-2.6133	1.6561	-16.0952	3.4768	0.0125	-0.0630
M	0.0026	-0.0076	-3.4692	0.0007	0.1030	0.0154	-0.5036	-0.1626	0.0000	-0.0150
Y	0.0037	-0.0006	-1.6117	-0.1692	-1.9123	1.6252	-0.1606	0.0675	3.4583	2.4109
L'	0.0008	-0.0005	-0.9761	-0.0144	-0.9951	0.2649	-0.0627	0.0463	3.6911	0.4786
N'	-0.0030	-0.0131	-1.0692	0.0313	-0.2093	-1.2096	0.1725	0.0509	0.3050	-1.6963

CASE 358 60 KT 3250 FT/MIN SEA LEVEL 9500 LB AFT CG

PHI	THETA	PSI	ALPHA	BETA	GAMMA	[illegible]	B1S	A1S	[illegible]
-2.08	9.29	0.00	-23.17	0.82	32.43	17.45	7.35	-3.66	6.31

XDOT	ZDOT	U0	V0	W0	VT0
85.68	-54.30	93.13	1.45	-39.75	101.27

	U	W	Q	V	P	R	DC	DB	DA	DP
X	-0.0563	0.1707	-0.0560	0.0363	-1.0310	-0.9368	2.6860	0.7095	-1.0367	-0.2067
Z	0.1538	-0.9765	-2.2671	-0.0727	-2.6966	3.4070	-16.1195	2.9369	0.1107	-0.0316
M	-0.0069	-0.0746	-0.2657	0.0036	0.1797	0.0138	-0.0216	-0.1609	0.0022	0.0236
Y	0.0156	-0.3526	-1.7865	-0.1408	-0.0328	2.3652	-0.7263	0.1521	1.0086	2.3270
L'	0.0069	-0.0210	-1.1160	-0.0109	0.0152	3.3576	-0.2380	0.0715	0.5612	0.6737
N'	-0.0115	0.0269	-0.9909	0.0621	-0.1386	-1.5197	0.7926	-0.0520	0.0899	-1.6786

CASE 359 60 KT -1969 FT/MIN SEA LEVEL 9500 LB AFT CG

PHI	THETA	PSI	ALPHA	BETA	GAMMA	[illegible]	B1S	A1S	[illegible]
0.02	5.16	0.00	26.56	0.01	-18.90	8.21	1.70	-0.30	-0.03

XDOT	ZDOT	U0	V0	W0	VT0
95.81	32.83	92.49	0.02	41.25	101.27

	U	W	Q	V	P	R	DC	DB	DA	DP
X	-0.0208	0.1066	2.9721	0.0502	-1.1160	-0.1705	1.7669	0.6692	-0.0110	-0.0036
Z	0.0117	-0.9662	-1.7617	-0.0050	-1.6517	0.7675	-11.6190	[illegible]	-0.3197	0.0251
M	0.0081	[illegible]	-1.6011	-0.0511	0.2963	0.0169	0.1297	[illegible]	0.0012	-0.0019
Y	-0.0069	0.0117	[illegible]	-0.1172	[illegible]	1.7767	0.1676	[illegible]	0.7060	2.5506
L'	-0.0015	0.0016	-0.7090	[illegible]	-1.5175	0.2191	0.0665	0.1196	[illegible]	0.5061
N'	0.0026	-0.0112	-0.1711	0.1676	-0.5163	-1.2961	-0.1011	0.1117	0.1716	-1.5812

TABLE V-4 CONTINUED

UH-1H STABILITY AND CONTROL DERIVATIVES -- US UNITS

(BODY-FIXED FRL AXIS SYSTEM)

CASE 170 1 KT LEVEL FLIGHT AT SEA LEVEL 9500 LB MID CG

PHI	THETA	PSI	ALPHA	BETA	GAMMA	OMR	B1S	A1S	OTP
-1.09	4.89	0.00	4.88	-0.09	0.00	15.62	-0.08	-1.76	7.56

XDOT	ZDOT	UO	VO	WO	VTO
1.69	0.00	1.68	-0.00	3.16	1.69

	U	W	Q	V	P	R	DC	DB	DA	DP
X	-0.0056	0.0257	0.7239	-0.0208	-1.2613	-0.3665	0.7171	1.0530	-0.0067	-0.0025
Z	-0.0716	-0.3286	0.3006	-0.0819	-0.3096	2.3571	-8.4218	0.2867	0.0096	0.0125
M	0.0074	-0.0040	-0.3135	0.0020	0.2506	0.0371	-0.0056	-0.2036	0.0012	0.0176
Y	0.0159	-0.0039	-1.2220	-0.0439	-1.0526	0.7632	-0.2717	0.0120	0.0937	1.4243
L'	0.0098	-0.0049	-0.9162	-0.0160	-0.7415	0.1608	-0.1305	0.0083	0.6396	0.4685
N'	-0.0012	-0.0062	-0.1973	0.0210	-0.3061	-0.7102	0.4725	-0.0006	0.0913	-1.1665

CASE 171 60 KT LEVEL FLIGHT AT SEA LEVEL 9500 LB MID CG

PHI	THETA	PSI	ALPHA	BETA	GAMMA	OMR	B1S	A1S	OTP
-0.62	4.72	0.00	4.72	-0.05	0.00	13.31	2.56	-1.66	2.49

XDOT	ZDOT	UO	VO	WO	VTO
101.27	0.00	100.93	-0.09	8.33	101.27

	U	W	Q	V	P	R	DC	DB	DA	DP
X	-0.0229	0.0590	1.6379	0.0011	-1.0467	-0.2903	0.7201	0.8650	-0.0139	-0.0562
Z	0.0059	-0.7220	-1.2690	-0.0217	-1.6986	1.9048	-9.5736	2.3676	0.0051	-0.0203
M	0.0037	-0.0015	-0.5572	0.0012	0.2217	0.0127	0.0295	-0.2113	0.0020	-0.0180
Y	0.0005	-0.0035	-1.0827	-0.1076	-1.8784	1.2511	-0.0509	0.0490	0.8027	1.6350
L'	-0.0012	-0.0048	-0.7637	-0.0206	-1.2689	0.3163	-0.0035	0.0422	0.6313	0.5303
N'	-0.0036	-0.0160	-0.0609	0.0304	-0.2160	-1.2097	0.2676	0.0678	0.0890	-1.3363

CASE 172 100 KT LEVEL FLIGHT AT SEA LEVEL 9500 LB MID CG

PHI	THETA	PSI	ALPHA	BETA	GAMMA	OMR	B1S	A1S	OTP
-5.83	3.91	0.00	3.91	-0.06	0.00	13.97	5.08	-1.72	2.63

XDOT	ZDOT	UO	VO	WO	VTO
168.78	0.00	168.39	-0.17	11.50	168.78

	U	W	Q	V	P	R	DC	DB	DA	DP
X	-0.0492	0.3737	1.9260	0.0352	-0.8996	-0.3230	0.8795	0.6515	-0.0136	-0.1382
Z	0.0736	-0.8111	-1.3133	-0.0234	-2.4281	7.0887	-13.7698	6.2057	0.0263	-0.0215
M	0.0052	-0.0036	-0.7333	0.0006	0.2928	0.0163	0.0179	-0.2383	0.0020	0.0006
Y	0.0030	-0.0169	-1.0538	-0.1551	-1.8325	1.6687	-0.1691	0.1210	0.9065	2.0891
L'	0.0016	-0.0130	-0.7610	-0.0290	-1.2768	0.6291	-0.1051	0.0955	0.6472	0.6898
N'	0.0006	-0.0171	-0.1968	0.0306	-0.1666	-1.6367	0.2225	0.0975	0.0903	-1.7066

TABLE V-4 CONTINUED
UH-1H STABILITY AND CONTROL DERIVATIVES -- US UNITS
(BODY-FIXED FRL AXIS SYSTEM)

CASE 173 1 KT LEVEL FLIGHT AT SEA LEVEL 9500 LB FWD CG

PHI	THETA	PSI	ALPHA	BETA	GAMMA	θMR	B1S	A1S	θTR
-1.09	1.95	0.00	1.95	-0.04	0.00	15.38	-2.92	-1.70	7.50

XDOT	ZDOT	UO	VO	WO	VTO
1.69	0.00	1.69	-0.00	0.06	1.69

	U	W	Q	V	P	R	DC	DB	DA	DP
X	-0.0090	0.0092	0.7123	-0.0134	-1.2843	-0.2620	0.2692	1.0643	-0.0055	-0.0033
Z	-0.1014	-0.3320	0.3720	-0.0796	-0.2080	2.2273	-8.4448	0.3099	0.0291	0.0723
M	0.0024	-0.0041	-0.3168	0.0020	0.2500	0.0276	-0.0017	-0.2027	0.0012	0.0183
Y	0.0150	-0.0040	-1.2216	-0.0437	-1.0492	0.7790	-0.2728	0.0151	0.8931	1.4242
L'	0.0091	-0.0049	-0.8501	-0.0157	-0.7351	0.1636	-0.1298	0.0105	0.6350	0.4624
N'	-0.0016	-0.0062	0.3018	0.0215	-0.2963	-0.7273	0.4779	0.0007	0.0827	-1.1804

CASE 174 60 KT LEVEL FLIGHT AT SEA LEVEL 9500 LB FWD CG

PHI	THETA	PSI	ALPHA	BETA	GAMMA	θMR	B1S	A1S	θTR
-0.60	1.99	0.00	1.99	-0.02	0.00	13.34	-0.12	-1.59	2.45

XDOT	ZDOT	UO	VO	WO	VTO
101.27	0.00	101.21	-0.04	3.53	101.27

	U	W	Q	V	P	R	DC	DB	DA	DP
X	-0.0218	0.0250	1.5839	0.0001	-1.1213	-0.1740	0.2486	0.9905	-0.0083	-0.0552
Z	-0.0231	-0.7238	-1.3708	-0.0205	-1.3241	2.0998	-9.6062	2.3681	0.0193	0.0143
M	0.0039	-0.0023	-0.5744	0.0012	0.2199	0.0083	0.0279	-0.2099	0.0012	-0.0131
Y	0.0001	-0.0033	-1.0837	-0.1082	-1.8721	1.2966	-0.0445	0.0552	0.8969	1.6333
L'	-0.0016	-0.0046	-0.6990	-0.0190	-1.2556	0.3233	0.0018	0.0469	0.6376	0.5309
N'	-0.0043	-0.0159	0.4127	0.0322	-0.1923	-1.2436	0.2524	0.0664	0.0815	-1.3546

CASE 175 8 KT 780 FT/MIN SEA LEVEL 9500 LB FWD CG

PHI	THETA	PSI	ALPHA	BETA	GAMMA	θMR	B1S	A1S	θTR
-1.31	2.75	0.00	-87.25	1.31	90.00	16.18	-2.19	-1.98	8.32

XDOT	ZDOT	UO	VO	WO	VTO
0.00	-13.00	0.62	0.30	-12.98	11.00

	U	W	Q	V	P	R	DC	DB	DA	DP
X	-0.0199	0.0167	0.7766	-0.0158	-1.2582	-0.2941	0.3999	1.0708	-0.0078	-0.0292
Z	-0.0378	-0.3689	-0.2399	-0.0021	-0.3852	2.4191	-8.4445	0.3024	0.0556	0.1523
M	0.0035	-0.0077	-0.3554	0.0012	0.2425	0.0359	-0.0214	-0.2034	0.0018	0.0441
Y	0.0131	-0.0197	-1.5684	-0.0487	-0.3927	0.8154	-0.3271	0.0141	0.9073	1.4672
L'	0.0081	-0.0119	-0.5596	-0.0125	-0.6255	0.1974	-0.1592	0.0096	0.6452	0.4798
N'	-0.0001	0.0069	0.4142	0.0239	-0.3333	-0.4944	0.5417	-0.0027	0.0838	-1.2141

TABLE V-4 CONTINUED
UH-1H STABILITY AND CONTROL DERIVATIVES -- US UNITS
(BODY-FIXED FRL AXIS SYSTEM)

CASE 176 60 KT 1650 FT/MIN SEA LEVEL 9500 LB FWD CG

PHI	THETA	PSI	ALPHA	BETA	GAMMA	θMR	B1S	A1S	θTR
-1.26	0.29	0.00	-15.46	0.34	15.76	16.37	-0.87	-2.74	5.64

XDOT	ZDOT	U0	V0	W0	VT0
97.46	-27.50	97.60	0.60	-27.00	101.27

	U	W	Q	V	P	R	DC	DB	DA	DP
X	-0.0243	0.0236	1.0625	0.0014	-1.1480	-0.1766	0.0243	1.1010	-0.0100	-0.1274
Z	-0.0164	-0.6854	-1.4108	-0.0343	-1.3526	2.6837	-9.5310	2.2367	0.0474	-0.0155
M	0.0058	0.0091	-0.4027	0.0021	0.2175	-0.0129	[illegible]	-0.2257	0.0013	0.0051
Y	0.0040	-0.0184	-1.2511	-0.1192	-1.1703	1.5175	-0.2690	0.0856	0.9517	1.5988
L'	-0.0020	-0.0141	-0.7795	-0.0158	-0.7762	0.3708	-0.1133	0.0597	0.6760	0.5248
N'	-0.0078	0.0046	0.6527	0.0351	-0.2965	-1.3115	0.5702	0.0022	0.0829	-1.3236

CASE 177 60 KT -1524 FT/MIN SEA LEVEL 9500 LB FWD CG

PHI	THETA	PSI	ALPHA	BETA	GAMMA	θMR	B1S	A1S	θTR
-0.01	1.53	0.00	16.06	-0.00	-14.53	10.56	-1.35	-0.63	0.06

XDOT	ZDOT	U0	V0	W0	VT0
98.03	25.40	97.32	-0.00	28.02	101.27

	U	W	Q	V	P	R	DC	DB	DA	DP
X	-0.0177	0.0239	2.2622	-0.0014	-1.1425	-0.1243	0.1017	0.9586	-0.0114	-0.0044
Z	-0.0434	-0.6765	-1.5106	-0.0083	-0.9941	1.4224	-9.2902	2.1143	0.0069	0.0024
M	0.0035	-0.0078	-0.6584	0.0004	0.2239	0.0213	0.0465	-0.1998	0.0016	-0.0028
Y	-0.0037	0.0099	-1.0208	-0.1035	-2.4067	1.2182	0.1249	0.0038	0.8346	1.7236
L'	-0.0027	0.0032	-0.6528	-0.0213	-1.6110	0.2875	0.0870	0.0161	0.5934	0.5590
N'	-0.0014	-0.0278	0.4785	0.0318	-0.0837	-1.2268	-0.0030	0.1038	0.0754	-1.4301

CASE 178 1 KT LEVEL FLIGHT AT SEA LEVEL 9500 LB AFT CG

PHI	THETA	PSI	ALPHA	BETA	GAMMA	θMR	B1S	A1S	θTR
-1.10	7.82	0.00	7.82	-0.15	0.00	15.39	2.77	-1.78	7.55

XDOT	ZDOT	U0	V0	W0	VT0
1.69	0.00	1.67	-0.00	0.23	1.69

	U	W	Q	V	P	R	DC	DB	DA	DP
X	-0.0076	0.0416	0.7141	-0.0157	-1.2257	-0.4226	1.1654	1.0424	-0.0100	-0.0111
Z	-0.0418	-0.1237	0.2701	-0.0087	-0.5286	2.1966	-8.3642	0.3090	0.0281	0.0669
M	0.0015	-0.0047	-0.3141	-0.0050	0.2509	-0.0129	-0.0087	-0.2044	0.0015	0.0181
Y	0.0168	-0.0038	-1.2112	-0.0422	-1.0564	0.7414	-0.2692	0.0177	0.9940	1.4264
L'	0.0105	-0.0048	-0.9905	-0.0196	-1.7444	0.1600	-0.1100	0.0594	0.6441	0.4764
N'	-0.0007	-0.0042	-0.7027	0.0201	-0.3114	-0.6937	0.4690	-0.0012	0.1047	-1.1484

MICROFILMED FROM
BEST AVAILABLE COPY

TABLE V-4 CONCLUDED
UH-1H STABILITY AND CONTROL DERIVATIVES -- US UNITS
(BODY-FIXED FRL AXIS SYSTEM)

CASE 179 60 KT LEVEL FLIGHT AT SEA LEVEL 9500 LB AFT CG

PHI	THETA	PSI	ALPHA	BETA	GAMMA	ΘMR	B1S	A1S	ΘTR
-0.64	7.41	0.00	7.41	-0.34	0.00	11.27	5.19	-1.69	2.53

XDOT	ZDOT	U0	V0	W0	VT0
101.27	0.00	100.42	-0.15	13.05	101.27

	U	W	Q	V	P	R	DC	DB	DA	DP
X	-0.0270	0.0927	1.6843	0.0023	-0.9537	-0.3338	1.1919	0.7455	-0.0157	-0.0558
Z	0.0349	-0.7176	-1.1629	-0.0227	-1.6420	1.8021	-9.5198	2.3809	0.0016	-0.0245
M	0.0033	-0.0008	-0.5432	0.0012	0.2222	0.0159	0.0303	-0.2140	0.0024	-0.0163
Y	0.0009	-0.0037	-1.0749	-0.1071	-1.8798	1.2156	-0.0531	0.0501	0.8723	1.6372
L'	-0.0009	-0.0050	-0.8229	-0.0221	-1.2789	0.3107	-0.0056	0.0432	0.6280	0.5456
N'	-0.0029	-0.0160	-0.5292	0.0287	-0.2385	-1.1749	0.2451	0.0627	0.0989	-1.3186

CASE 180 60 KT 1902 FT/MIN SEA LEVEL 9500 LB AFT CG

PHI	THETA	PSI	ALPHA	BETA	GAMMA	ΘMR	B1S	A1S	ΘTR
-1.42	9.25	0.00	-9.99	0.25	18.24	16.64	6.14	-3.01	6.14

XDOT	ZDOT	U0	V0	W0	VT0
96.19	-31.70	99.71	0.44	-17.57	101.27

	U	W	Q	V	P	R	DC	DB	DA	DP
X	-0.0317	0.0950	1.1180	0.0067	-0.9009	-0.5630	1.2354	0.8491	-0.0199	-0.1313
Z	0.0572	-0.6957	-1.4918	-0.0382	-1.7709	2.4932	-9.4663	2.2860	0.0368	-0.0520
M	0.0049	-0.0036	-0.4012	0.0020	0.2417	0.0075	-0.0256	-0.2090	0.0028	-0.0038
Y	0.0075	-0.0193	-1.2355	-0.1164	-1.1382	1.3941	-0.2908	0.0915	0.9504	1.5991
L'	0.0022	-0.0128	-0.8798	-0.0188	-0.7514	0.3657	-0.1508	0.0739	0.6843	0.5365
N'	-0.0087	0.0051	-0.5802	0.0306	-0.3342	-1.2843	0.5879	-0.0004	0.1055	-1.2857

CASE 181 60 KT -1554 FT/MIN SEA LEVEL 9500 LB AFT CG

PHI	THETA	PSI	ALPHA	BETA	GAMMA	ΘMR	B1S	A1S	ΘTR
-0.03	6.32	0.00	21.14	-0.01	-14.82	10.48	3.39	-0.70	0.14

XDOT	ZDOT	U0	V0	W0	VT0
97.99	25.99	94.45	-0.02	36.52	101.27

	U	W	Q	V	P	R	DC	DB	DA	DP
X	-0.0196	0.0774	2.3773	-0.0010	-1.0237	-0.2595	0.9196	0.7776	-0.0073	-0.0158
Z	-0.0008	-0.6521	-1.2194	-0.0066	-1.2044	1.2939	-9.1659	2.1368	0.0155	0.0400
M	0.0069	-0.0197	-0.6444	-0.0021	0.2261	0.0216	0.0696	-0.2199	0.0008	-0.0039
Y	-0.0039	0.0097	-1.0071	-0.0911	-2.1919	1.1783	0.1193	0.0171	0.8367	1.7204
L'	-0.0026	0.0011	-0.7[illegible]	-0.0211	-1.6290	0.2929	0.0983	0.0249	0.6025	0.5718
N'	0.0009	-0.0171	-0.3542	0.0308	-0.1347	-1.1577	0.0007	0.1017	0.0964	-1.3861

TABLE V-5

UH-1H TRANSFER FUNCTION FACTORS

CASE 119 -40 KT BAR OFF

DENOMINATOR: (0) (-.173) (.409) (-.809) (2.00)[-.282;.347][.657;1.04]<.0150>

CONTROL NUMERATORS:

PHI/DA .562 (0) (-1.01) (1.90)[-.156;.310][.572;.773]<-.0619>
THE/DB -.174 (0) (-.00286) (-.175) (.752) (-.814) (.922) (1.97)<.974E-4>
PSI/DP -1.24 (.797)[-.124;.331][-.288;.451][.706;.903]<-.0180>

PHI/DB -.0263 (0) (.0773) (-.286) (2.13) (-4.98)[-.749;1.10]<-.00672>
THE/DA .120 (0) (.00491) (-.140) (.798) (-.878) (1.89)<.000109>

PHI/DA ;THE/DB -.0979 (0) (-.00234) (.809) (-1.00) (1.90)<-.000353>
PHI/DA ;PSI/DP -.729 (-.00176)[-.146;.325][.575;.750]<.760E-4>
THE/DB ;PSI/DP .217 (-.00244) (.706) (1.28)[-.215;.465]<-.000103>

PHI/DB ;PSI/DP .0425 (-.0121) (-1.74) (-2.23)[-.524;.111]<-.256E-4>
PHI/DP ;THE/DB -.0606 (0) (-.00244) (.692)[.00866;1.46]<.000217>
PHI/DC ;THE/DB .0234 (0) (-.00435) (1.66)[-.616;1.46]<-.000361>

THE/DA ;PSI/DP -.154 (0) (.688)[.0337;.336]<-.0120>
THE/DP ;PHI/DA .00932 (0) (0) (.809) (2.32) (-2.86)<-.0252>
THE/DC ;PHI/DA -.0182 (0) (.00990) (-1.09) (1.85) (3.33)<.00121>

PSI/DA ;THE/DB -.0148 (-.00234) (.811) (2.28)[-.446;1.62]<.000168>
PSI/DB ;PHI/DA -.0134 (-.00478) (1.273) (-.448)[.228;2.66]<-.555E-4>
XD/DB ;PHI/DA .592 (0) (.719) (-1.00) (1.90)[-.0423;2.43]<-4.79>

YD/DA ;THE/DB -.152 (-.00234) (.809) (-1.01) (1.89)[-.00414;4.54]<-.0113>
ZD/DB ;PHI/DA -.924 (0) (-.0822) (-1.00) (1.94)[.0207;2.37]<-.831>
XD/DC ;PHI/DA .0522 (0) (-1.11) (1.79) (2.44)[-.328;3.95]<-3.95>

YD/DP ;THE/DB -.294 (-.00244) (.692)[-.174;1.59][.278;2.36]<.00697>
ZD/DC ;PHI/DA -5.87 (0) (.0231) (-1.03) (1.87)[.0352;.850]<.189>

PHI/DA ;THE/DB ;PSI/DP .127 (.789)[-.970;.00211]<.449E-6>
PHI/DC ;THE/DB ;PSI/DP -.0144 (0) (-.00982) (-2.51)<-.000354>
THE/DC ;PHI/DA ;PSI/DP .0211 (-.00195) (.0103) (3.62)<-.153E-5>

PSI/DC ;PHI/DA ;THE/DB -.0259 (0) (0) (1.24)<-.0321>
XD/DB ;PHI/DA ;PSI/DP -.767 (-.00162) (.704)[-.0430;2.43]<.00517>
YD/DA ;THE/DB ;PSI/DP .215 (-.00248) (.788)[-.00578;4.37]<-.00799>

ZD/DC ;PHI/DA ;THE/DB .992 (0) (.00818) (-1.00) (1.87)<-.0152>
ZD/DC ;PHI/DA ;PSI/DP 7.62 (.00139) (.0386)[.0132;.822]<.000276>
XD/DC ;PHI/DA ;THE/DB .0100 (0) (-1.03) (1.90) (5.94)<-.116>

XD/DC ;PHI/DA ;PSI/DP -.0739 (-.00266) (2.35)[-.333;3.76]<.00654>
YD/DP ;PHI/DA ;THE/DB -.112 (-.00276) (-.289)[.988;.582]<-.303E-4>
ZD/DB ;PHI/DA ;PSI/DP 1.20 (-.00151) (-.0798)[.0191;2.37]<.000807>

ZD/DC ;PHI/DA ;THE/DB ;PSI/DP -1.29 (-.00176) (.00784)<.178E-4>
XD/DC ;PHI/DA ;THE/DB ;PSI/DP -.00931 (-.00187) (8.19)<.000142>

TABLE V-5 CONTINUED

UH-1H TRANSFER FUNCTION FACTORS

CASE 119 -40KT BAR ON

```
DENOMINATOR:  (0) (-.0270) (.604) (-.930) (1.94) [.120;.150][.183;1.13][.309;1.99]<.00338>

CONTROL NUMERATORS:
  PHI/DA    .562  (0) (.333) (.610) (-1.01) (1.90) [.103;.151][.203;1.18]<-.00688>
  THE/DB   -.174  (0) (-.00262) (-.0253) (.333) (.810) (-.928) (1.92) [.317;1.91]<.202E-4>
  PSI/DP   -1.24  (.602) [.229;.143][.0903;.160][.179;1.13][.325;2.00]<-.00200>

  PHI/DB   -.0263  (0) (.0733) (-.297) (.329) (.333) (2.15) (-4.51) [-.727;1.11]<-.000744>
  THE/DA    .120  (0) (.00224) (-.197) (.333) (.384) (.797) (-.857) (1.89) <.870E-5>

  PHI/DA ;THE/DB  -.0979  (0) (-.00234) (.333) (.333) (.809) (-1.00) (1.90) <-.392E-4>
  PHI/DA ;PSI/DP  -.729  (-.00176) (.333) (.605) [.121;.154][.196;1.17]<.845E-5>
  THE/DB ;PSI/DP   .217  (-.00244) (.333) (.798) [.195;.150][.331;1.91]<-.115E-4>

  PHI/DB ;PSI/DP   .0425  (-.0121) (.332) (.333) (-1.70) (-2.28) [-.528;.114]<-.284E-5>
  PHI/DP ;THE/DB  -.0606  (0) (-.00244) (.278) (.333) (.712) [.0194;1.57]<.241E-4>
  PHI/DC ;THE/DB   .0234  (0) (-.00434) (.319) (.333) (1.65) [-.591;1.50]<-.400E-4>

  THE/DA ;PSI/DP  -.154  (0) (.333) (.333) (.688) [.0337;.336]<-.00133>
  THE/DP ;PHI/DA   .00932  (0) (0) (.235) (.333) (.515) (2.47) (-3.01) <-.00279>
  THE/DC ;PHI/DA  -.0182  (0) (.00990) (.329) (.333) (-1.11) (1.84) (3.36) <.000135>

  PSI/DA ;THE/DB  -.0148  (-.00234) (.333) (.333) (.811) (2.28) [-.446;1.62]<.186E-4>
  PSI/DB ;PHI/DA  -.0134  (-.00478) (.273) (.333) (.333) (-.448) [.228;2.66]<-.617E-5>
   XD/DB ;PHI/DA   .592  (0) (.333) (.333) (.719) (-1.00) (1.90) [-.0423;2.43]<-.532>

   YD/DA ;THE/DB  -.152  (-.00234) (.333) (.333) (.809) (-1.01) (1.89) [-.00414;4.54]<-.00126>
   ZD/DB ;PHI/DA  -.924  (0) (-.0822) (.333) (.333) (-1.00) (1.94) [.0207;2.37]<-.0924>
   XD/DC ;PHI/DA   .0522  (0) (.333) (.390) (-1.13) (1.71) (2.38) [-.332;3.74]<-.439>

   YD/DP ;THE/DB  -.294  (-.00244) (.283) (.333) (.707) [-.0845;1.43][.182;2.83]<.000775>
   ZD/DC ;PHI/DA  -5.87  (0) (.0248) (.146) (.333) (-1.03) (1.88) [.0962;1.24]<.0210>

  PHI/DA ;THE/DB ;PSI/DP   .117  (0) (.333) (.333) [-.970;.00211]<.582E-7>
  PHI/DC ;THE/DB ;PSI/DP  -.0144  (0) (-.00982) (.333) (.333) (-2.51) <-.393E-4>
  THE/DC ;PHI/DA ;PSI/DP   .0211  (-.00195) (.0103) (.333) (.333) (3.62) <-.170E-6>

  PSI/DC ;PHI/DA ;THE/DB  -.0259  (.333) (.333) (1.24) [.354;.00325]<-.375E-7>
   XD/DB ;PHI/DA ;PSI/DP  -.767  (-.00162) (.333) (.333) (.704) [-.0430;2.43]<.000575>
   YD/DA ;THE/DB ;PSI/DP   .215  (-.00248) (.333) (.333) (.788) [-.00578;4.37]<-.000888>

   ZD/DC ;PHI/DA ;THE/DB   .992  (0) (.00818) (.333) (.333) (-1.00) (1.87) <-.00169>
   ZD/DC ;PHI/DA ;PSI/DP   7.62  (.00139) (.0473) (.123) (.333) [.0915;1.22]<.307E-4>
   XD/DC ;PHI/DA ;THE/DB   .0100  (0) (.333) (.333) (-1.03) (1.90) (5.94) <-.0129>

   XD/DC ;PHI/DA ;PSI/DP  -.0739  (-.00266) (.333) (.398) (2.17) [-.333;3.58]<.000727>
   YD/DP ;PHI/DA ;THE/DB  -.112  (-.00276) (-.289) (.333) (.333) [.988;.582]<-.337E-5>
   ZD/DB ;PHI/DA ;PSI/DP   1.20  (-.00151) (-.0798) (.333) (.333) [.0191;2.37]<.897E-4>

   ZD/DC ;PHI/DA ;THE/DB ;PSI/DP  -1.29  (-.00176) (.00784) (.333) (.333) <.198E-5>
   XD/DC ;PHI/DA ;THE/DB ;PSI/DP  -.00931  (-.00187) (.333) (.333) (8.19) <.158E-4>
```

MICROFILMED FROM
BEST AVAILABLE COPY

TABLE V-5 CONTINUED
UH-1H TRANSFER FUNCTION FACTORS

CASE 120 -20KT BAR OFF

DENOMINATOR: (0) (.346) (1.39)[-.681;.437][-.420;.593][.811;.856]<.0236>

CONTROL NUMERATORS:

PHI/DA .555 (0) (-.567) (1.23)[-.449;.571][.910;.617]<-.0481>
THE/DB -.169 (0) (-.0430) (1.43)[-.673;.445][.974;.580]<.000689>
PSI/DP -1.04 (.412)[-.220;.479][-.406;.592][.910;.925]<-.0294>

PHI/DB -.0163 (0) (.102) (-.658) (1.28) (-8.16)[-.123;.632]<-.00459>
THE/DA .125 (0) (-.0284) (.559) (1.21)[-.727;.403]<-.000389>

PHI/DA ;THE/DB -.0932 (0) (-.0417) (.539) (-.575) (1.23)<-.00148>
PHI/DA ;PSI/DP -.603 (0)[-.435;.587][.921;.605]<-.0760>
THE/DB ;PSI/DP .174 (-.0428) (.458) (1.10)[-.221;.483]<-.000876>

PHI/DB ;PSI/DP .0184 (-7.08)[.0351;.0268][-.166;.538]<-.269E-4>
PHI/DP ;THE/DB -.0524 (0) (-.0428) (.425)[.0530;.981]<.000918>
PHI/DC ;THE/DB .0198 (0) (-.0429) (.926)[-.568;1.15]<-.00104>

THE/DA ;PSI/DP -.134 (-.0268) (.480)[.00377;.424]<.000308>
THE/DP ;PHI/DA .00610 (0) (-.0268) (.369) (1.61) (-3.33)<.000323>
THE/DC ;PHI/DA -.00181 (0) (-.0275) (1.12) (-1.18) (6.42)<-.000423>

PSI/DA ;THE/DB -.0146 (-.0418) (.535) (1.82)[-.457;1.54]<.00141>
PSI/DB ;PHI/DA -.0227 (-.00412) (.319) (-.827) (1.90)<-.492E-4>
XD/DB ;PHI/DA .576 (0) (.529) (-.575) (1.23)[-.0107;2.29]<-1.13>

YD/DA ;THE/DB -.144 (-.0417) (.539) (-.582) (1.22)[-.00379;4.55]<-.0477>
ZD/DB ;PHI/DA -.376 (0) (-.479) (-.566) (1.25)[-.0156;2.11]<-.568>
XD/DC ;PHI/DA .0241 (0) (1.11) (-1.18) (3.16)[-.203;2.24]<-.500>

YD/DP ;THE/DB -.237 (-.0429) (.425)[.0156;1.03][.113;2.53]<.0296>
ZD/DC ;PHI/DA -5.18 (0) (.510) (-.566) (1.17)[-.382;.556]<.542>

PHI/DA ;THE/DB ;PSI/DP .101 (0) (-.0425) (.524)<-.00226>
PHI/DC ;THE/DB ;PSI/DP -.00264 (-.00670) (-.0428) (-8.54)<.647E-5>
THE/DC ;PHI/DA ;PSI/DP .0153 (-.00539) (-.0291)<.232E-5>

PSI/DC ;PHI/DA ;THE/DB -.0336 (.00956) (-.0435) (.653)<.913E-5>
XD/DB ;PHI/DA ;PSI/DP -.626 (0) (.515)[-.0120;2.29]<-1.70>
YD/DA ;THE/DB ;PSI/DP .171 (-.0426) (.523)[-.00701;4.37]<-.0725>

ZD/DC ;PHI/DA ;THE/DB .868 (0) (-.0376) (-.569) (1.17)<.0217>
ZD/DC ;PHI/DA ;PSI/DP 5.62 (.00148) (.565)[-.397;.595]<.00167>
XD/DC ;PHI/DA ;THE/DB -.00217 (0) (1.25)[-.975;1.42]<-.00543>

XD/DC ;PHI/DA ;PSI/DP -.0361 (-.00554) (3.27)[-.340;2.06]<.00277>
YD/DP ;PHI/DA ;THE/DB -.0866 (-.0556) (-.0734)[.977;.332]<-.389E-4>
ZD/DB ;PHI/DA ;PSI/DP .409 (0) (-.457)[-.0197;2.08]<-.808>

ZD/DC ;PHI/DA ;THE/DB ;PSI/DP -.944 (0) (-.0407)<.0384>
XD/DC ;PHI/DA ;THE/DB ;PSI/DP .00630 (-.00577) (-.848)<.308E-4>

TABLE V-5 CONTINUED
UH-1H TRANSFER FUNCTION FACTORS

CASE 120 -20KT BAR ON

DENOMINATOR: (0) (-.0835) (-.441) (-.492) (-1.27)[.250;.316][.158;.877][.262;1.94]<.00666>

CONTROL NUMERATORS:

PHI/DA .555 (0) (.333) (.494) (-.569) (1.23)[.236;.323][.168;.894]<-.00535>
THE/DB -.168 (0) (-.0431) (-.0747) (.333) (-.454) (.537) (1.27)[.270;1.88]<.000197>
PSI/DP -1.04 (.489)[.235;.143][.279;.326][.140;.879][.278;1.96]<-.00327>

PHI/DB -.0163 (0) (.0862) (.330) (.333) (-.669) (1.29) (-8.18)[-.0909;.679]<-.000506>
THE/DA .125 (0) (-.0333) (.333) (.410) (.571) (1.19)[-.707;.455]<-.798E-4>

PHI/DA ;THE/DB -.0932 (0) (-.0417) (.333) (.333) (.539) (-.575) (1.23)<-.000164>
PHI/DA ;PSI/DP -.603 (0) (.333) (.488)[.287;.328][.146;.855]<-.00844>
THE/DB ;PSI/DP .174 (-.0828) (.333) (.529)[.213;.143][.205;1.90]<-.973E-4>

PHI/DB ;PSI/DP .0184 (.332) (.333) (-7.09)[.0347;.0268][-.159;.538]<-.299E-5>
PHI/DP ;THE/DB -.0524 (0) (-.0428) (.194) (.333) (.483)[.0771;1.21]<.000102>
PHI/DC ;THE/DB .0198 (0) (-.0429) (.294) (.333) (.878)[-.48.;1.26]<-.000116>

THE/DA ;PSI/DP -.134 (-.0268) (.333) (.333) (.480)[.00377;.494]<.343E-4>
THE/DP ;PHI/DA .00610 (0) (-.0272) (.214) (.333) (.452) (1.88) (-3.57)<.359E-4>
THE/DC ;PHI/DA -.00181 (0) (-.0276) (.312) (.333) (1.05) (-1.30) (6.63)<-.472E-4>

PSI/DA ;THE/DB -.0146 (-.0418) (.333) (.333) (.535) (1.82)[-.457;1.54]<.000157>
PSI/DB ;PHI/DA -.0227 (-.00432) (.319) (.333) (.333) (-.827) (1.90)<-.547E-5>
XD/DB ;PHI/DA .576 (0) (.333) (.333) (.529) (-.575) (1.23)[-.0107;2.29]<-.126>

YD/DA ;THE/DB -.144 (-.0417) (.333) (.333) (.539) (-.582) (1.22)[-.00379;4.55]<-.00529>
ZD/DB ;PHI/DA -.376 (0) (.333) (.333) (-.479) (-.566) (1.25)[-.0156;2.11]<-.0631>
XD/DC ;PHI/DA .0241 (0) (.333) (.337) (1.01) (-1.30) (3.22)[-.170;2.21]<-.0557>

YD/DP ;THE/DB -.237 (-.0428) (.195) (.333) (.477)[.0240;1.10][.110;2.94]<.00328>
ZD/DC ;PHI/DA -5.18 (0) (.333) (-.567) (1.17)[.304;.248][.144;.923]<.0602>

PHI/DA ;THE/DB ;PSI/DP .101 (0) (-.0425) (.333) (.333) (.524)<-.000251>
PHI/DC ;THE/DB ;PSI/DP -.00264 (-.00670) (-.0428) (.333) (.333) (-8.54)<.719E-6>
THE/DC ;PHI/DA ;PSI/DP .0153 (-.00539) (-.0281) (.333) (.333)<.258E-6>

PSI/DC ;PHI/DA ;THE/DB -.0336 (.00956) (-.0435) (.333) (.333) (.653)<.101E-5>
XD/DB ;PHI/DA ;PSI/DP -.626 (0) (.333) (.333) (.515)[-.0120;2.29]<-.188>
YD/DA ;THE/DB ;PSI/DP .171 (-.0426) (.333) (.333) (.523)[-.00701;4.37]<-.00806>

ZD/DC ;PHI/DA ;THE/DB .868 (0) (-.0376) (.333) (.333) (-.569) (1.17)<.00241>
ZD/DC ;PHI/DA ;PSI/DP 5.62 (.00148) (.333)[.378;.284][.116;.909]<.000185>
XD/DC ;PHI/DA ;THE/DB -.00217 (0) (.333) (.333) (1.25)[-.975;1.42]<-.0006O4>

XD/DC ;PHI/DA ;PSI/DP -.0361 (-.00554) (.333) (.360) (3.06)[-.296;2.05]<.000308>
YD/DP ;PHI/DA ;THE/DB -.0866 (-.0556) (-.0734) (.333) (.333)[.977;.332]<-.432E-5>
ZD/DB ;PHI/DA ;PSI/DP .409 (0) (.333) (.333) (-.457)[-.0197;2.08]<-.0898>

ZD/DC ;PHI/DA ;THE/DB ;PSI/DP -.944 (0) (-.0407) (.333) (.333)<.00427>
XD/DC ;PHI/DA ;THE/DB ;PSI/DP .00630 (-.00577) (.333) (.333) (-.848)<.343E-5>

TABLE V-5

UH-1H TRANSFER FUNCTION FACTORS

CASE 122 HOVER BAR OFF

DENOMINATOR: (0) (.467) (.944)[-.371;.462](-.152;.551](.796;.631]<.0114>
HD P PL

CONTROL NUMERATORS:

PHI/DA .569 (0) (.0645) (.677)[-.486;.380](.897;.506]<.000920>
THE/DB -.169 (0) (-.00817) (1.06)[.959;.415](-.138;.552]<.771E-4>
PSI/DP -1.20 (.704)[-.104;.431](-.464;.478](.834;.666]<-.0159>

PHI/DB .157 (0) (.0594)[-.0503;.511](.977;.567]<.000779>
PHI/DP .339 (0) (-.152) (.276)[-.364;.400](.794;.578]<-.000760>
PHI/DC -.0817 (0) (-.0405) (.519)[.604;.409](-.754;.758]<.000165>

THE/DA .134 (0) (-.00762) (.375) (.766)[-.0339;.575]<-.969E-4>
THE/DP -.00660 (0) (.00129) (-8.73)[.675;.465](.0303;.539]<.466E-5>
THE/DC .00491 (0) (.0167) (.498)[-.124;.579](.998;3.31]<.000150>

PSI/DA .0829 (1.29)[-.426;.386](.941;.521](-.701;1.94]<.0162>
PSI/DB .00222 (.535) (1.57) (5.86)[-.0553;.506](-.943;2.23]<.0138>
PSI/DC .437 (.404)[-.276;.324](-.333;.629](.919;.868]<.00556>

XD/DB 1.06 (0) (1.07)[.955;.409](-.138;.552](.0202;2.27]<.297>
YD/DA .885 (.0617) (.665)[-.486;.380](.892;.504](.0104;4.53]<.0273>
ZD/DC -9.79 (0) (.661)[-.251;.394](-.205;.579](.952;.628]<-.[illegible]>

XD/DC -.00871 (0) (.499) (-6.19) (-9.98)[-.126;.576](.748;1.79[illegible].287>
YD/DP 1.63 (-.157) (.291)[-.364;.402](.787;.580](.0364;2.57]<-.0269>
ZD/DP .247 (0) (.371) (1.30) (-1.67)[-.106;.539](.294;1.52]<-.133>

PHI/DA ;THE/DB -.0962 (0) (-.00787) (.0616) (.444) (.621)<.129E-4>
PHI/DA ;PSI/DP -.711 (.00838)[-.440;.380](.923;.492]<-.000209>
THE/DB ;PSI/DP .203 (-.0127) (.276) (.934)[-.149;.414]<-.000114>

PHI/DB ;PSI/DP -.191 (.00719) (.473)[-.0705;.506]<-.000166>
PHI/DP ;THE/DB -.0572 (0) (-.0212) (-.0371)[.850;.349]<-.548E-5>
PHI/DC ;THE/DB .0138 (0) (.0105) (.105) (.544) (-1.11)<-.917E-5>

THE/DA ;PSI/DP -.167 (-.00563) (.507)[-.106;.521]<.000129>
THE/DP ;PHI/DA -.00465 (0) (-.00516) (.193) (-.439) (3.00)<-.610E-5>
THE/DC ;PHI/DA .00301 (0) (.561) (8.89)[.766;.0301]<.136E-4>

PSI/DA ;THE/DB -.0140 (-.00787) (.418) (1.34)[-.708;1.92]<.000228>
PSI/DB ;PHI/DA -.00813 (-.00696) (.189)[.0634;1.10]<.130E-4>
PSI/DC ;THE/DB -.0740 (.00948)[-.371;.563](.992;.809]<-.000185>

PSI/DC ;PHI/DA .256 (.0168)[-.442;.395](.921;.566]<.000215>
XD/DB ;PHI/DA .604 (0) (.0616) (.430) (.626)[.0192;2.27]<.0515>
XD/DB ;PSI/DP -1.27 (.254) (.940)[-.147;.413](.0200;2.27]<-.266>

YD/DA ;THE/DB -.150 (-.00787) (.0596) (.452) (.591)[.0110;4.53]<.000384>
YD/DA ;PSI/DP -1.20 [-.440;.380](.922;.492](-.0114;4.37]<-.800>
ZD/DC ;PHI/DA -5.57 (0) (.101) (.335) (.623)[-.359;.321]<-.0122>

ZD/DC ;THE/DB 1.65 (0) (.00403) (.410) (1.00)[-.183;.558]<.000853>
ZD/DC ;PSI/DP 11.7 [-.191;.377](-.310;.491](.910;.745]<.224>
XD/DC ;PHI/DA -.00546 (0) (.0362) (.560) (4.33)[-.433;6.03]<-.0174>

XD/DC ;THE/DB -.0508 (0) (.423) (.954)[-.144;.535]<-.005B7>
XD/DC ;PSI/DP .0119 (1.23) (6.55)[-.159;.459](-.156;8.78]<.463>
YD/DP ;PHI/DA .630 (.0822) (-.211)[-.448;.380](.923;.473]<-.000352>

YD/DP ;THE/DB -.276 (-.0159) (-.0525)[.860;.357](.0369;2.55]<-.000192>
ZD/DB ;PHI/DA .140 (0) (.0623) (.738) (-1.54)[.343;1.33]<-.0175>
ZD/DB ;PSI/DP -.296 (1.21) (-1.68)[-.139;.465](.249;1.46]<.280>

PHI/DA ;THE/DB ;PSI/DP .120 (.00765) (-.00787) (.392)<-.284E-5>
PHI/DC ;THE/DB ;PSI/DP .00851 (2.16)[.844;.0132]<.322E-5>
THE/DC ;PHI/DA ;PSI/DP -.0284 (.00270) (.0215)<-.165E-5>

MICROFILMED FROM
BEST AVAILABLE COPY

TABLE V-5 CONTINUED
UH-1H TRANSFER FUNCTION FACTORS
CASE 122 HOVER BAR OFF

CONTROL NUMERATORS CONCLUDED:

PSI/DC ;PHI/DA ;THE/DB -.0432 (-.00794) (.0161) (.510) <.282E-5>

YD/DB ;PHI/DA ;PSI/DP -.754 (.00752) (.383) [.0193;2.27] <-.0112>
YD/DA ;THE/DB ;PSI/DP .202 (-.00776) (.390) [-.0107;4.37] <-.0117>
ZD/DC ;PHI/DA ;THE/DB .941 (0) (.00283) (.0575) (.572) <.875E-4>

ZD/DC ;THE/DB ;PSI/DP -1.98 (.00582) (.909) [-.245;.452] <-.00214>
ZD/DC ;PHI/DA ;PSI/DP 6.95 (.00783) (.438) [-.355;.336] <.00269>
YD/DC ;PHI/DA ;THE/DB -.0290 (0) (.0612) (.565) <-.00100>

YD/DC ;PHI/DA ;PSI/DP .00676 (.0137) (4.57) [-.486;5.45] <.0125>
YD/DC ;THE/DB ;PSI/DP .0528 (.885) [-.244;.383] <.00685>
YD/DP ;PHI/DA ;THE/DB -.107 (-.00799) (.0743) (-.211) (.359) <-.479E-5>

ZD/DB ;PHI/DA ;PSI/DP -.175 (.00828) (-1.51) [.347;1.34] <.00396>

ZD/DC ;PHI/DA ;THE/DB ;PSI/DP -1.17 (0) (.0111) <-.0131>
YD/DC ;PHI/DA ;THE/DB ;PSI/DP .0311 (.00833) <.000259>

GUST NUMERATORS:

PHI/UG -.00722 (0) (0) (0) (.0690) (-.0882) [.952;.611] <.164E-4>
THE/UG -.00157 (0) (0) (2.02) [-.0911;.571] [.990;.585] <-.000353>
PSI/UG .00215 (0) (0) (-.104) (.622) (-.866) [.737;1.49] <.000267>

PHI/VG .0113 (0) (0) (.931) [-.374;.448] [.817;.602] <.000358>
THE/VG -.00167 (0) (0) (0) (-.0200) (.122) [.545;.379] <.585E-6>
PSI/VG -.0208 (0) (0) (.583) [-.392;.447] [.795;.719] <-.00126>

PHI/WG .00568 (0) (0) (.0390) (-.614) (.717) [.400;.388] <-.147E-4>
THE/WG .00406 (0) (0) (.0170) (.610) (1.19) [-.116;.568] <.162E-4>
PSI/WG .00649 (0) (-.238) (1.07) [.483;.264] [-.270;.995] <-.000115>

PHI/PG .586 (0) (.0668) (.963) [-.328;.446] [.923;.548] <.00225>
THE/PG -.230 (0) (.300) (.949) [-.913;.0351] [-.0894;.484] <-.188E-4>
PSI/PG .372 (.924) [-.329;.449] [.961;.682] [-.509;1.13] <.0413>

PHI/QG .880 (0) (.0722) (.620) [-.597;.280] [.892;.423] <.000552>
THE/QG .191 (0) (0) (.402) (.643) (1.84) [-.0862;.575] <.0300>
PSI/QG .0696 (1.38) [-.526;.294] [.957;.406] [-.879;2.54] <.00879>

PHI/RG -.147 (0) (.270) (-.372) [-.401;.395] [.790;.508] <.000598>
THE/RG -.0127 (0) (0) (-.0218) (.225) (2.92) [-.0237;.587] <.625E-4>
PSI/RG .686 (.660) [-.201;.444] [-.409;.513] [.875;.696] <.0114>

YD/UG .0104 (0) (1.91) [-.0913;.569] [.987;.581] [-.0363;2.29] <.0114>
ZD/UG .126 (0) (0) (.0798) (1.12) [.694;.340] [-.0687;.677] <.000596>
YD/VG .0472 (0) (.433) [-.373;.448] [.814;.601] [.0274;2.77] <.0114>

YD/WG -.0150 (0) (0) (.618) (1.29) (7.94) [-.119;.567] <-.0306>
ZD/WG .376 (0) (.781) [-.131;.499] [-.361;.553] [.922;.712] <.0114>

PHI/UG ;THE/DB .00123 (0) (0) (.0593) [.950;.575] <.242E-4>
PHI/UG ;PSI/DP .00793 (0) (0) (.0130) (-.0856) (.577) <-.509E-5>
THE/UG ;PHI/DA -.000877 (0) (0) (.0645) [.952;.711] <-.286E-4>

THE/UG ;PSI/DP .00190 (0) (.609) (1.91) [-.157;.473] <.000495>
PSI/UG ;PHI/DA .00182 (0) (0) (-.0273) [.985;.183] <-.167E-5>
PSI/UG ;THE/DB -.000360 (0) (.646) (-1.00) [.723;1.36] <.000430>

PHI/VG ;THE/DB -.00190 (0) (0) (-.00817) [.955;.394] <.240E-5>
PHI/VG ;PSI/DP -.00653 (0) [-.345;.466] [.872;.591] <-.000496>
THE/VG ;PHI/DA -.000980 (0) (0) (-.00762) (.358) (1.13) <.302E-5>

THE/VG ;PSI/DP .00186 (0) (0) (-.00127) [.536;.484] <-.553E-6>
PSI/VG ;PHI/DA -.0128 (0) [-.412;.191] [.931;.507] <-.000504>
PSI/VG ;THE/DB .00353 (0) (0) (-.00857) (.386) (.792) <-.925E-5>

TABLE V-5 CONTINUED

UH-1H TRANSFER FUNCTION FACTORS

CASE 122 HOVER BAR OFF

```
GUST NUMERATORS CONTINUED:
 PHI/WG ;THE/DP  -.000995 (0) (0) (.0208) (.0715) (.616)<-.121E-5>
 PHI/WG ;PSI/DP  -.00901 (0) (.0228) (-.527)[ .330;.346]<.130E-4>
 THE/WG ;PHI/DA   .00230 (0) (0) (.0133) (.0555) (.697)<.118E-5>

 THE/WG ;PSI/DP  -.00483 (0) (.0175) (1.29)[ -.170;.456]<-.226E-4>
 PSI/WG ;PHI/DA   .00322 (0) (.0294) (.593)[ -.379;.455]<.116E-4>
 PSI/WG ;THE/DB  -.00111 (0) (.0192) (1.12)[ -.414;.927]<-.205E-4>

 PHI/PG ;THE/DB  -.0970 (0) (-.00859) (.0662) (.413) (.726)<.166E-4>
 PHI/PG ;PSI/DP  -.829 (.00651)[ -.337;.443 ][ .976;.610]<-.000393>
 THE/PG ;PHI/DA  -.132 (0) (-.00721) (.0670)[ .991;.526]<.177E-4>

 THE/PG ;PSI/DP   .278 (0) (-.382) (.650)[ .133;.458]<-.0145>
 PSI/PG ;PHI/DA   .163 (.0387)[ -.638;.281 ][ .794;.534]<.000143>
 PSI/PG ;THE/DB  -.0624 (-.00857) (.405) (1.17)[ -.461;1.09]<.000303>

 PHI/QG ;THE/DB  -.150 (0) (-.00220) (.0616) (.450) (.606)<.557E-5>
 PHI/QG ;PSI/DP  -1.08 (.0145)[ -.576;.280 ][ .903;.389]<-.000166>
 THE/QG ;PHI/DA   .106 (0) (.00142) (.0616) (.458) (.601)<.254E-5>

 THE/QG ;PSI/DP  -.228 (0) (.445) (1.90)[ -.159;.482]<-.0449>
 PSI/QG ;PHI/DA  -.0334 (-.0565) (.140) (-.553)[ .593;.709]<-.732E-4>
 PSI/QG ;THE/DB  -.0122 (-.00210) (.419) (1.40)[ -.883;2.48]<.921E-4>

 PHI/RG ;THE/DB   .0250 (0) (-.00812) (-.263)[ .977;.276]<.406E-5>
 PHI/RG ;PSI/DP  -.0558 (.0267) (.291) (1.23)[ -.346;.382]<-.777E-4>
 THE/RG ;PHI/DA  -.00684 (0) (-.00766) (.257)[ -.379;.615]<.510E-5>

 THE/RG ;PSI/DP   .0198 (.00126) (.884) (-.924)[ -.0523;.480]<-.467E-5>
 PSI/RG ;PHI/DA   .483 (.00475)[ -.444;.380 ][ .918;.504]<.703E-4>
 PSI/RG ;THE/DB  -.116 (-.00813) (.379) (.940)[ -.250;.479]<.771E-4>

  XD/UG ;PHI/DA   .00590 (0) (.0645)[ .956;.702 ][ -.0473;2.22]<.000920>
  XD/UG ;THE/DB  -.960E-4 (0) (.391) (1.24) (-5.31)[ -.298;.559]<.771E-4>
  XD/UG ;PSI/DP  -.0125 (.605) (1.80)[ -.[illegible]9;.471 ][ -.0393;2.29]<-.0159>

  ZD/UG ;PHI/DA   .0716 (0) (0) (.0678) (.735)[ .749;.116]<.483E-4>
  ZD/UG ;THE/DB  -.0209 (0) (0) (.390) (1.17)[ -.149;.659]<-.00412>
  ZD/UG ;PSI/DP  -.151 (0) (.891)[ .820;.132 ][ -.161;.600]<-.000835>

  YD/VG ;PHI/DA   .0168 (0) (.132)[ -.450;.378 ][ .940;.472]<.703E-4>
  YD/VG ;THE/DB  -.00794 (0) (-.00817)[ .955;.395 ][ .0414;2.76]<.771E-4>
  YD/VG ;PSI/DP  -.0225 [ -.346;.467 ][ .871;.589 ][ .0311;3.05]<-.0159>

  XD/WG ;PHI/DA   .00779 (0) (0) (.0583) (.697) (-9.48)<-.00100>
  XD/WG ;THE/DB  -.00449 (0) (0) (.458) (1.04)[ -.153;.581]<-.000629>
  XD/WG ;PSI/DP   .0197 (0) (1.52) (6.76)[ -.170;.453]<.0416>

  ZD/WG ;PHI/DA   .219 (0) (.0650) (.534) (.705)[ -.397;.420]<.000920>
  ZD/WG ;THE/DB  -.0645 (0) (-.00841) (.492) (1.03)[ -.162;.529]<.771E-4>
  ZD/WG ;PSI/DP  -.451 [ -.0460;.421 ][ -.486;.533 ][ .867;.838]<-.0159>

  YD/UG ;  ZD/DC  -.101 (0) (.449) (2.04)[ -.0789;.506 ][ .0160;2.20]<-.133>
  YD/VG ;  ZD/DC  -.413 (0)[ -.284;.399 ][ .952;.503 ][ .0259;2.83]<-.133>

 PHI/UG ;THE/DB ;PSI/DP  -.00136 (0) (.00719) (.528)<-.516E-5>
 THE/UG ;PHI/DA ;PSI/DP   .00111 (0) (.00838) (.698)<.649E-5>
 PSI/UG ;PHI/DA ;THE/DB  -.000307 (0) (-.00696) (.199)<.405E-6>

 PHI/VG ;THE/DB ;PSI/DP   .00109 (0) (-.0127) (.256)<-.358E-5>
 THE/VG ;PHI/DA ;PSI/DP   .00112 (0) (-.00563) (.638)<-.802E-5>
 PSI/VG ;PHI/DA ;THE/DB   .00216 (0) (-.00787) (.414)<-.709E-5>

 PHI/WG ;THE/DB ;PSI/DP   .00157 (0)[ .955;.0185]<.328E-6>
 THE/WG ;PHI/DA ;PSI/DP  -.00294 (0) (.00317) (.0200)<-.191E-5>
 PSI/WG ;PHI/DA ;THE/DB  -.000547 (0) (-.00804) (.0311)<.146E-6>
```

TABLE V-5 CONTINUED
UH-1H TRANSFER FUNCTION FACTORS

CASE 122 HOVER BAR OFF

GUST NUMERATORS CONCLUDED:

PHI/PG ;THE/DB ;PSI/DP .138 (.00664) (-.00407) (.394) <-.298E-5>
THE/PG ;PHI/DA ;PSI/DP .166 (.00617) (-.00766) (.399) <-.306E-5>
PSI/PG ;PHI/DA ;THE/DB -.0275 (-.00786) (.0204) (.396) <.175E-5>

PHI/QG ;THE/DB ;PSI/DP .185 (-.00268) (.00865) (.391) <-.169E-5>
THE/QG ;PHI/DA ;PSI/DP -.133 (.390)[.787;.00451]<-.106E-5>
PSI/QG ;PHI/DA ;THE/DB .00554 (-.00767) (.0622) (.402) <-.106E-5>

PHI/RG ;THE/DB ;PSI/DP .00925 (-.00499) (.0144) (.762) <-.506E-6>
THE/RG ;PHI/DA ;PSI/DP .0119 (-.0980)[-.417;.0244]<-.691E-6>
PSI/RG ;PHI/DA ;THE/DB -.0681 (.00416) (-.00787) (.409) <.911E-6>

XD/UG ;PHI/DA ;THE/DB -.674E-4 (0) (.0617) (.761) (-4.07) <.129E-4>
XD/UG ;PHI/DA ;PSI/DP -.00737 (.00838) (.675)[-.0484;2.24]<-.000209>
XD/UG ;THE/DB ;PSI/DP .991E-4 (1.09) (-6.60)[-.552;.400]<-.000114>

ZD/UG ;PHI/DA ;THE/DB -.0119 (0) (3) (.0623) (.733) <-.000543>
ZD/UG ;PHI/DA ;PSI/DP -.0895 (0) (.00841)[.756;.121]<-.119E-4>
ZD/UG ;THE/DB ;PSI/DP .0250 (0) (1.02)[-.280;.583]<.00870>

YD/VG ;PHI/DA ;THE/DB -.00284 (0) (-.00789) (.103) (.394) <.911E-6>
YD/VG ;PHI/DA ;PSI/DP -.00684 [-.474;.377][.899;.463]<-.000209>
YD/VG ;THE/DB ;PSI/DP .00377 (-.0127) (.256)[.3543;3.05]<-.000114>

XD/WG ;PHI/DA ;THE/DB -.00255 (0) (0) (.0616) (.689) <-.000108>
XD/WG ;PHI/DA ;PSI/DP -.00969 (0) (.0125) (-9.44) <.00114>
XD/WG ;THE/DB ;PSI/DP .00534 (0) (.862)[-.214;.383]<.000674>

ZD/WG ;PHI/DA ;THE/DB -.0367 (0) (-.00805) (.0616) (.708) <.129E-4>
ZD/WG ;PHI/DA ;PSI/DP -.267 (.00838) (.531)[-.395;.419]<-.000209>
ZD/WG ;THE/DB ;PSI/DP .0775 (-.0138) (.835)[-.199;.357]<-.000114>

XD/UG ; ZD/DC ;PHI/DA -.0571 (0) (.101) (.859)[.0398;2.15]<-.0122>
XD/UG ; ZD/DC ;THE/DB .00140 (0) (.387) (1.63)[-.136;.983]<.000953>
XD/UG ; ZD/DC ;PSI/DP .121 (1.72)[-.124;.466][.0100;2.22]<.224>

YD/VG ; ZD/DC ;PHI/DA -.148 (0) (-.0312) (.520)[-.235;.347]<.000281>
YD/VG ; ZD/DC ;THE/DB .0696 (0) (.00403) (.386)[.0138;2.81]<.000853>
YD/VG ; ZD/DC ;PSI/DP .236 (.653)[-.271;.391][.0215;3.08]<.224>

XD/UG ;PHI/DA ;THE/DB ;PSI/DP .685E-4 (.00778) (-5.32) <-.284E-5>
ZD/UG ;PHI/DA ;THE/DB ;PSI/DP .0149 (0) (.00828) <.000121>
YD/VG ;PHI/DA ;THE/DB ;PSI/DP .00115 (-.00797) (.310) <-.284E-5>

XD/WG ;PHI/DA ;THE/DB ;PSI/DP .00116 (0) (.00817) <.258E-4>
ZD/WG ;PHI/DA ;THE/DB ;PSI/DP .0459 (.00748) (-.00805) <-.284E-5>
XD/UG ; ZD/DC ;PHI/DA ;THE/DB .000940 (0) (.0771) (1.21) <.875E-4>

YD/VG ; ZD/DC ;PHI/DA ;THE/DB .0244 (0) (0) (.126) <.003C8>
YD/VG ; ZD/DC ;PHI/DA ;PSI/DP .0707 (.195)[-.352;.310]<.00269>
XD/WG ; ZD/DC ;PHI/DA ;THE/DB .0258 (0) (.0616) (.631) <.001C3>

XD/UG ; ZD/DC ;PHI/DA ;THE/DB ;PSI/DP -.000748 (-.00688) <.514E-5>
YD/VG ; ZD/DC ;PHI/DA ;THE/DB ;PSI/DP -.0119 (0) <-.0119>
YD/WG ; ZD/DC ;PHI/DA ;THE/DB ;PSI/DP -.0111 (.00832) <-.000259>

TABLE V-5 CONTINUED
UH-1H TRANSFER FUNCTION FACTORS

CASE 122 HOVER BAR ON

DENOMINATOR: (0) (.428) (.676)[.569;. 217][-.201;.229][.259;.903][.216;1.95]<.00223>

CONTROL NUMERATORS:

PHI/DA .569 (0) (.0664) (.333) (.442) (.620)[.0778;.186][.262;.928]<.000103>
THE/DB -.169 (0) (-.00803) (.333) (.433) (.679)[.272;.185][.219;1.89]<.162E-4>
PSI/DP -1.20 (.388)[.567;.173][-.234;.199][.264;.903][.247;1.99]<-.00177>

PHI/DB .157 (0) (.0566) (.301) (.333)[-.0580;.513][.951;.606]<.861E-4>
PHI/DP .339 (0) (-.0413) (.374)[.177;.236][.489;.519][.257;.960]<-.723E-4>
PHI/DC -.0817 (0) (-.00495) (.505)[.790;.315][-.656;.526][.0941;1.00]<.562E-5>

THE/DA .134 (0) (-.00772) (.333) (.457)[-.144;.579][.995;.581]<-.178E-4>
THE/DP -.00660 (0) (0) (.138) (.484) (-.523) (-.927) (-7.75)[.806;.733]<.000892>
THE/DC .00491 (0) (.0175) (.412) (.718) (4.59)[.219;.194][.350;2.60]<.299E-4>

PSI/DA .0829 (.333) (.409) (1.31)[.116;.194][.267;.930][-.700;1.93]<.00180>
PSI/DB .00222 (.333) (-1.22) (-2.92) (2.95) (4.82)[.935;.326][-.155;.622]<.00154>
PSI/DC .437 (.473)[.286;.117][.135;.266][.279;.906][.244;1.95]<.000617>

XD/DB 1.06 (0) (.331) (.421) (.683)[.271;.185][.217;1.89][.0216;2.27]<.0633>
YD/DA .885 (.0631) (.331) (.451) (.590)[.0785;.186][.262;.927][.0103;4.53]<.00303>
ZD/DC -9.79 (0) (.592)[-.197;.191][.665;.196][.256;.910][.217;1.95]<-.0256>

XD/DC -.00871 (0) (.451) (.903) (1.39) (-7.30) (-8.81)[.248;.196][.189;2.11]<-.0543>
YD/DP 1.63 (-.0526) (.368)[.187;.245][.402;.447][.249;.943][.0627;2.98]<-.00299>
ZD/DB .247 (0) (.333) (.828) (-1.62)[.330;.198][.375;1.16][.217;2.07]<-.0250>

PHI/DA ;THE/DB -.0962 (0) (-.00787) (.0616) (.333) (.333) (.448) (.621)<.143E-5>
PHI/DA ;PSI/DP -.711 (.00838) (.333) (.385)[.0966;.188][.262;.927]<-.232E-4>
THE/DB ;PSI/DP .00203 (-.0126)(.333)(.399)[.207;.101][.253;1.98]<-.126E-4>

PHI/DB ;PSI/DP -.190 (.00719) (.333) (.334) (.475)[-.0668;.505]<-.184E-4>
PHI/DP ;THE/DB -.0572 (0) (.333) (.381)[-.643;.0153][.462;.549]<-.514E-6>
PHI/DC ;THE/DB .0138 (0) (.0113) (.333) (.525) (-.889)[.542;.214]<-.111E-5>

THE/DA ;PSI/DP -.167 (-.00563) (.333) (.333) (.507)[-.106;.521]<.143E-4>
THE/DP ;PHI/DA -.00465 (0) (-.00474) (-.109) (.331) (.469) (.825) (1.90)<-.590E-6>
THE/DC ;PHI/DA .00301 (0) (.333) (.435) (.630) (1.73)[.718;.0243]<.142E-5>

PSI/DA ;THE/DB -.0140 (-.00787) (.333) (.333) (.418) (1.34)[-.708;1.92]<.253E-4>
PSI/DB ;PHI/DA -.00813 (-.00696) (.189) (.333) (.333)[.0634;1.10]<.145E-5>
PSI/DC ;THE/DB -.0740 (.00951) (.333) (.494)[.180;.198][.253;1.89]<-.161E-4>

PSI/DC ;PHI/DA .256 (.0168) (.333) (.488)[.118;.200][.265;.926]<.239E-4>
XD/DB ;PHI/DA .604 (0) (.0616) (.333) (.333) (.430) (.626)[.0192;2.27]<.00572>
XD/DB ;PSI/DP -1.27 (.333) (.386)[.253;.0976][.251;1.92][.0214;2.27]<-.0295>

YD/DA ;THE/DB -.150 (-.00787) (.0596) (.333) (.333) (.452) (.591)[.0110;4.53]<.427E-4>
YD/DA ;PSI/DP -1.20 (.333) (.383)[.0981;.188][.262;.927][-.0114;4.37]<-.0889>
ZD/DC ;PHI/DA -5.57 (0) (.130) (.333) (.554)[.00129;.103][.256;.934]<-.00123>

ZD/DC ;THE/DB 1.65 (0) (.00361) (.333) (.610)[.267;.187][.221;1.88]<.000150>
ZD/DC ;PSI/DP 11.7 [.564;.150][-.154;.170][.262;.910][.247;1.98]<.0248>
XD/DC ;PHI/DA -.00546 (0) (.0309) (.333) (.468) (.701) (3.66)[-.411;5.86]<-.00212>

XD/DC ;THE/DB -.0508 (0) (.333) (.597)[.270;.185][.231;1.89]<-.00124>
XD/DC ;PSI/DP .0119 (.405) (5.94)[.283;.161][.365;1.96][-.125;4.23]<.0514>
YD/DP ;PHI/DA .630 (.0896) (-.211) (.333) (.345)[.0756;.182][.263;.927]<-.392E-4>

YD/DP ;THE/DB -.276 (.333) (.376)[-.845;.0176][.371;.478][.0620;2.95]<-.213E-4>
ZD/DB ;PHI/DA .140 (0) (.0623) (.333) (.333) (.738) (-1.54)[.343;1.33]<-.00194>
ZD/DB ;PSI/DP -.296 (.333) (-1.62)[.253;.173][.451;.26][.211;2.02]<.0311>

PHI/DA ;THE/DB ;PSI/DP .120 (.00765) (-.00787) (.333) (.333) (.392)<-.315E-6>
PHI/DC ;THE/DB ;PSI/DP .00851 (.333) (.333) (2.16)[.944;.3132]<.357E-6>
THE/DC ;PHI/DA ;PSI/DP -.0284 (0) (.0215) (.333) (.333)<-.480E-6>

TABLE V-5 CONTINUED
UH-1H TRANSFER FUNCTION FACTORS

CASE 122 HOVER BAR ON

CONTROL NUMERATORS CONCLUDED:

```
PSI/DC ;PHI/DA ;THE/DB  -.0432 (-.00794) (.0161) (.333) (.333) (.510) <.313E-6>

XD/DB ;PHI/DA ;PSI/DP  -.754 (.00752) (.333) (.333) (.383)[.0193;2.27 ]<-.00124>
YD/DA ;THE/DB ;PSI/DP   .202 (-.00776) (.333) (.333) (.390)[-.0107;4.37 ]<-.00130>
ZD/DC ;PHI/DA ;THE/DB   .941 (0) (.00283) (.0575) (.333) (.333) (.572) <.972E-5>

ZD/DC ;THE/DB ;PSI/DP  -1.98 (.00583) (.333)[.197;.130 ][.253;1.92 ]<-.000238>
ZD/DC ;PHI/DA ;PSI/DP   6.95 (.00744) (.333)[.190;.137 ][.258;.934 ]<.0002999>
XD/DC ;PHI/DA ;THE/DB  -.0240 (0) (.0612) (.333) (.333) (.545) <-.000111>

XD/DC ;PHI/DA ;PSI/DP   .00676 (.0137) (.333) (.401) (4.25)[-.490;5.15 ]<.00139>
YD/DC ;THE/DB ;PSI/DP   .0528 (.333)[.177;.109 ][.258;1.91 ]<.0001641>
YD/DP ;PHI/DA ;THE/DB  -.107 (-.00799) (.0743) (-.211) (.333) (.334) (.359)<-.532E-6>

ZD/DB ;PHI/DA ;PSI/DP  -.175 (.00628) (.333) (.333) (-1.51)[.347;1.34 ]<.000446>

ZD/DC ;PHI/DA ;THE/DB ;PSI/DP  -1.17 (0) (.0111) (.333) (.333) <-.00145>
XD/DC ;PHI/DA ;THE/DB ;PSI/DP   .0311 (.00633) (.333) (.333) <.2878-4>
```

GUST NUMERATORS:

```
PHI/DG  -.00722 (0) (0) (0) (.0555) (.296)[.912;.626 ][.174;.699 ]<-.379E-4>
THE/DG  -.00107 (0) (0) (.369) (.577) (.874)[.279;.269 ][.489;1.61 ]<-.693E-4>
PSI/DG   .00215 (0) (0) (-.568)[.929;.315 ][.220;.921 ][.405;2.58 ]<-.000681>

PHI/VG   .0113 (0) (0) (.395)[.113;.275 ][.725;.458 ][.316;.989 ]<.695E-4>
THE/VG  -.00167 (0) (0) (0) (-.00779) (.452)[.951;.636 ][-.115;2.04 ]<.990E-5>
PSI/VG  -.0298 (0) (0) (.407)[.139;.200 ][.275;.898 ][.266;2.04 ]<-.001140>

PHI/WG   .00568 (0) (0) (.0350) (-.275) (.841)[.919;.253 ][.0295;.890 ]<-.234E-5>
THE/WG   .00406 (0) (0) (.0169) (.393) (.662)[.262;.221 ][.305;1.91 ]<.316E-5>
PSI/WG   .00649 (0) (-.0649) (.0743)[.583;.445 ][.243;.776 ][.0847;1.85 ]<-.128E-4>

PHI/PG   .586 (0) (.0737) (.269) (.387) (.846)[.143;.273 ][.412;.925 ]<.000242>
THE/PG  -.230 (0) (.00235) (.298) (.442) (.690)[.525;.0605 ][.0725;1.85 ]<-.618E-6>
PSI/PG   .372 (.380)[.0287;.320 ][.723;.344 ][.271;1.09 ][-.0112;1.50 ]<.004599>

PHI/QG   .880 (0) (.0758) (.340) (.511) (.539)[-.0859;.112 ][.181;.917 ]<.659E-4>
THE/QG   .191 (0) (0) (.328) (.437) (.693)[.224;.291 ][.491;1.90 ]<.005490>
PSI/QG   .0696 (.307) (.390) (1.78) (-2.21) (-2.59)[.0522;.115 ][.192;.936 ]<.000976>

PHI/RG  -.147 (0) (-.0833) (.389)[.0957;.279 ][.392;.438 ][.186;.936 ]<.625E-4>
THE/RG  -.0127 (0) (-.00687) (.0555) (.454) (1.10)[-.924;.341 ][.805;1.73 ]<.846E-6>
PSI/RG   .686 (.401)[.543;.179 ][-.198;.213 ][.263;.906 ][.244;1.97 ]<.001260>

XD/UG   .0104 (0) (.858)[.287;.272 ][.968;.447 ][.445;1.80 ][-.00716;2.28 ]<.002230>
ZD/UG   .126 (0) (0) (.00863) (.794)[.339;.206 ][.272;.913 ][.206;1.96 ]<.000117>
YD/VG   .0472 (0) (.391)[.0884;.279 ][.695;.409 ][.296;.977 ][.0493;3.13 ]<.002230>

XD/WG  -.0139 (0) (0) (.519) (.594) (7.12)[.289;.223 ][.258;2.00 ]<-.006050>
ZD/WG   .376 (0) (.737)[.606;.218 ][-.133;.235 ][.244;.901 ][.219;1.95 ]<.002230>

PHI/UG ;THE/DB   .00123 (0) (0) (.0566) (.297) (.333)[.909;.622 ]<.268E-5>
PHI/UG ;PSI/DP   .00793 (0) (0) (.00695) (.333) (.534)[.165;.900 ]<.795E-5>
THE/UG ;PHI/DA  -.000877 (0) (0) (.0672) (.333) (.401) (.561) (.723) <-.319E-5>

THE/UG ;PSI/DP   .00190 (0) (.333) (.722)[.257;.182 ][.495;1.90 ]<.550E-4>
PSI/UG ;PHI/DA   .00182 (0) (0) (-.00839) (.189) (.333)[.258;.941 ]<-.856E-6>
PSI/UG ;THE/DB  -.000360 (0) (.333) (-.625)[.932;.314 ][.190;2.54 ]<.478E-4>

PHI/VG ;THE/DB  -.00190 (0) (0) (-.00801) (.333) (.407)[.687;.493 ]<.504E-6>
PHI/VG ;PSI/DP  -.00653 (0) (.289) (.333)[.0232;.298 ][.373;.991 ]<-.551E-4>
THE/VG ;PHI/DA  -.000940 (0) (0) (-.00772) (.333) (.455)[.982;.696 ]<.555E-6>

THE/VG ;PSI/DP   .00187 (0) (0) (-.00546) (.333) (.615)[.0618;1.96 ]<-.799E-5>
PSI/VG ;PHI/DA  -.0128 (0) (.333) (.407)[.119;.194 ][.262;.925 ]<-.560E-4>
PSI/VG ;THE/DB   .00353 (0) (0) (-.00792) (.333) (.416)[.278;1.97 ]<-.151E-4>
```

TABLE V-5 CONTINUED
UH-1H TRANSFER FUNCTION FACTORS

CASE 122 HOVER BAR ON

GUST NUMERATORS CONTINUED:

```
PHI/WG ;THE/DB   -.000995 (0) (0) (.0223) (.103) (.199) (.333) (.918) <-.139E-6>
PHI/WG ;PSI/DP   -.00901 (0) (.0229) (.131) (-.202) (.333)[.0591;.891]<.144E-5>
THE/WG ;PHI/DA    .00230 (0) (0) (.0123) (.0519) (.334) (.423) (.611) <.127E-6>

THE/WG ;PSI/DP   -.00483 (0) (.0175) (.333)[.223;.154][.361;1.94]<-.251E-5>
PSI/WG ;PHI/DA    .00322 (0) (.0295) (.333)[.265;.223][.255;.908]<.129E-5>
PSI/WG ;THE/DB   -.00111 (0) (.0193) (.333)[.495;.337][.105;1.68]<-.227E-5>

PHI/PG ;THE/DB   -.0970 (0) (-.00863) (.0749) (.267) (.333) (.403) (.794) <.178E-5>
PHI/PG ;PSI/DP   -.829 (-.00651) (.333) (.183)[.147;.268][.407;.939]<-.436E-4>
THE/PG ;PHI/DA   -.132 (0) (-.00719) (.0732) (.291) (.333) (.449) (.629) <.191E-5>

THE/PG ;PSI/DP    .278 (0) (-.111) (.112) (.333) (.396)[.0866;1.89]<-.00162>
PSI/PG ;PHI/DA    .163 (.0375) (.333) (.382)[-.209;.150][.267;.949]<.159E-4>
PSI/PG ;THE/DB   -.0624 (-.00857) (.333) (.393)[.671;.435][-.0228;1.59]<.337E-4>

PHI/QG ;THE/DB   -.150 (0) (-.00229) (.0616) (.333) (.391) (.461) (.587) <.654E-6>
PHI/QG ;PSI/DP   -1.08 (.0144) (.333) (.387)[-.00920;.111][.179;.917]<-.206E-4>
THE/QG ;PHI/DA    .106 (0) (.00162) (.0616) (.323) (.333) (.445) (.623) <.315E-6>

THE/QG ;PSI/DP   -.229 (0) (.333) (.186)[.226;.210][.522;1.96]<-.00499>
PSI/QG ;PHI/DA   -.0334 (-.0645) (.120) (-.253) (.333) (.371)[.265;1.03]<-.814E-5>
PSI/QG ;THE/DB   -.0122 (-.00210) (.312) (.333) (.413) (1.74) (-2.00) (-2.68) <.102E-4>

PHI/RG ;THE/DB    .0250 (0) (-.00818) (-.0660) (.333) (.400)[.284;.483]<.420E-6>
PHI/RG ;PSI/DP   -.0558 (.0263) (.333) (.951)[.241;.166][.338;.818]<-.863E-5>
THE/RG ;PHI/DA   -.00684 (0) (-.00763) (-.112) (.333) (.456) (.677) (-.898) <.538E-6>

THE/RG ;PSI/DP    .0198 (.00125) (.333) (-.419)[.548;.221][.120;1.75]<-.518E-6>
PSI/RG ;PHI/DA    .403 (.00475) (.333) (.400)[.0940;.189][.263;.928]<.781E-5>
PSI/RG ;THE/DB   -.116 (-.00813) (.333) (.410)[.216;.135][.248;1.91]<.857E-5>

 YD/UG ;PHI/DA    .00590 (0) (.0670) (.333) (.740)[.952;.463][-.0157;2.22]<.000103>
 YD/UG ;THE/DB   -.960E-4 (0) (.333) (.833) (-5.16)[.280;.191][.151;1.86]<.162E-4>
 YD/UG ;PSI/DP   -.0125 (.415) (.549)[.266;.182][.459;1.89][-.0136;2.28]<-.00177>

 ZD/UG ;PHI/DA    .0716 (0) (0) (.00556) (.0618) (.333) (.733)[.269;.946]<.539E-5>
 ZD/UG ;THE/DB   -.0209 (0) (0) (.333) (.795)[.340;.199][.203;1.89]<-.000777>
 ZD/UG ;PSI/DP   -.151 (0) (.00586)[.268;.179][.282;.918][.243;1.98]<-.928E-4>

 YD/VG ;PHI/DA    .0168 (0) (.143) (.333) (.373)[.0353;.180][.262;.923]<.821E-5>
 YD/VG ;THE/DB   -.00794 (0) (-.00803) (.333) (.404)[.628;.441][.0577;3.11]<.162E-4>
 YD/VG ;PSI/DP   -.0225 (.266) (.323)[.00333;.291][.354;.983][.0409;3.34]<-.00177>

 XD/WG ;PHI/DA    .00716 (0) (0) (.0563) (.333) (-8.60)[.991;.554]<-.000354>
 XD/WG ;THE/DB   -.00449 (0) (0) (.333) (.729)[.270;.186][.223;1.88]<-.000134>
 XD/WG ;PSI/DP    .0184 (0) (.405) (6.04)[.261;.154][.300;2.08]<.00462>

 ZD/WG ;PHI/DA    .214 (0) (.0672) (.333) (.705)[.209;.190][.246;.919]<.000103>
 ZD/WG ;THE/DB   -.0645 (0) (-.00824) (.333) (.745)[.263;.186][.224;1.88]<.162E-4>
 ZD/WG ;PSI/DP   -.451 [.603;.170][-.173;.207][.244;.902][.249;1.99]<-.00177>

 XD/UG ; ZD/DC   -.101 (0) (.209) (.861)[.0772;.293][.527;1.81][.0259;2.25]<-.0256>
 YD/VG ; ZD/DC   -.411 (0)[.198;.196][.726;.419][.293;.959][.0467;1.17]<-.0256>

PHI/UG ;THE/DB ;PSI/DP  -.00136 (0) (.00719) (.333) (.333) (.528) <-.573E-6>
THE/UG ;PHI/DA ;PSI/DP   .00111 (0) (.00818) (.333) (.333) (.698) <.721E-6>
PSI/UG ;PHI/DA ;THE/DB  -.000307 (0) (-.00696) (.189) (.333) (.333) <.450E-7>

PHI/VG ;THE/DB ;PSI/DP   .00109 (0) (-.0127) (.256) (.333) (.333) <-.398E-6>
THE/VG ;PHI/DA ;PSI/DP   .00112 (0) (-.00563) (.333) (.333) (.638) <-.447E-6>
PSI/VG ;PHI/DA ;THE/DB   .00216 (0) (-.00787) (.333) (.333) (.416) <-.788E-6>

PHI/WG ;THE/DB ;PSI/DP   .00157 (0) (.333) (.333)[.955;.0145]<.184E-7>
THE/WG ;PHI/DA ;PSI/DP  -.00284 (0) (.00337) (.0200) (.333) (.333) <-.212E-7>
PSI/WG ;PHI/DA ;THE/DB  -.000547 (0) (-.00804) (.0333) (.333) (.333) <.163E-7>
```

MICROFILMED FROM
BEST AVAILABLE COPY

TABLE OF CONTENTS

Section		Page	
I	INTRODUCTION	1	1/A14
	A. Background Information	2	1/B2
	B. Stability and Control Derivatives	4	1/B3
	C. Transfer Function Factors	11	1/B12
II	HUGHES OH-6A	19	1/C7
III	BOEING VERTOL BO-105C	67	1/F14
IV	BELL AH-1G	115	2/C8
V	BELL UH-1H	213	3/C10
VI	SIKORSKY CH-53D	303	4/C4
REFERENCES	. . . . .	358	4/G4

Appendix			
A	PROCEDURE FOR FORMULATING EQUATIONS OF MOTION	359	4/G5
B	ANALYSIS OF MULTILOOP SYSTEM RELATIONSHIPS	371	5/A7

TABLE V-5 CONTINUED
UH-1H TRANSFER FUNCTION FACTORS

CASE 122 HOVER BAR ON

GUST NUMERATORS CONCLUDED:

```
PHI/PG ;THE/DB ;PSI/DP    .138 (.00664) (-.00807) (.333) (.333) (.394)<-.323E-6>
THE/PG ;PHI/DA ;PSI/DP    .166 (.00617) (-.00766) (.333) (.333) (.389)<-.340E-6>
PSI/PG ;PHI/DA ;THE/DB   -.0275 (-.00786) (.0204) (.333) (.333) (.396)<.194E-6>

PHI/QG ;THE/DB ;PSI/DP    .185 (-.00268) (.00865) (.333) (.333) (.391)<-.186E-6>
THE/QG ;PHI/DA ;PSI/DP   -.133 (.333) (.333) (.390)[ .787;.00453]<-.118E-6>
PSI/QG ;PHI/DA ;THE/DB    .00554 (-.00767) (.0622) (.333) (.333) (.402)<-.118E-6>

PHI/RG ;THE/DB ;PSI/DP    .00925 (-.00499) (.0144) (.333) (.333) (.762)<-.562E-7>
THE/RG ;PHI/DA ;PSI/DP    .0118 (-.0980) (.333) (.333)[ -.417;.0244 ]<-.767E-7>
PSI/RG ;PHI/DA ;THE/DB   -.0681 (.00416) (-.00787) (.333) (.333) (.409)<.101E-6>

 XD/UG ;PHI/DA ;THE/DB   -.674E-4 (0) (.0617) (.333) (.333) (.761) (-4.07)<.143E-5>
 XD/UG ;PHI/DA ;PSI/DP   -.00737 (.00838) (.333) (.412) (.547)[ -.0375;2.24 ]<-.232E-4>
 XD/UG ;THE/DB ;PSI/DP    .991E-4 (.333) (-6.50)[ .0908;.135 ][ .238;1.79 ]<-.126E-4>

 ZD/UG ;PHI/DA ;THE/DB   -.0119 (0) (0) (.0623) (.333) (.333) (.733)<-.603E-4>
 ZD/UG ;PHI/DA ;PSI/DP   -.0895 (0) (.00564) (.00806) (.333)[ .270;.947 ]<-.122E-5>
 ZD/UG ;THE/DB ;PSI/DP    .0250 (0) (.333)[ .268;.178 ][ .245;1.91 ]<.000967>

 YD/VG ;PHI/DA ;THE/DB   -.00284 (0) (-.00789) (.103) (.333) (.333) (.394)<.101E-6>
 YD/VG ;PHI/DA ;PSI/DP   -.00684 (.314) (.333)[ .0414;.195 ][ .259;.922 ]<-.232E-4>
 YD/VG ;THE/DB ;PSI/DP    .00377 (-.0127) (.222) (.322) (.333)[ .0564;3.33 ]<-.126E-4>

 XD/WG ;PHI/DA ;THE/DB   -.00255 (0) (0) (.0616) (.333) (.333) (.689)<-.120E-4>
 XD/WG ;PHI/DA ;PSI/DP   -.00888 (0) (.0125) (.333) (.403) (-8.54)<.000127>
 XD/WG ;THE/DB ;PSI/DP    .00534 (0) (.333)[ .184;.107 ][ .258;1.92 ]<.749E-4>

 ZD/WG ;PHI/DA ;THE/DB   -.0367 (0) (-.00805) (.0616) (.333) (.333) (.708)<.143E-5>
 ZD/WG ;PHI/DA ;PSI/DP   -.267 (.00837) (.333)[ .213;.192 ][ .245;.919 ]<-.232E-4>
 ZD/WG ;THE/DB ;PSI/DP    .0775 (-.0136) (.333)[ .201;.0985 ][ .256;1.93 ]<-.126E-4>

 XD/UG ; ZD/DC ;PHI/DA   -.0571 (0) (.333) (.739)[ .587;.136 ][ .0380;2.17 ]<-.00123>
 XD/UG ; ZD/DC ;THE/DB    .00140 (0) (.333) (1.34)[ .467;.231 ][ .123;2.11 ]<.000150>
 XD/UG ; ZD/DC ;PSI/DP    .121 (.330)[ .262;.182 ][ .470;1.92 ][ .0185;2.25 ]<.0248>

 YD/VG ; ZD/DC ;PHI/DA   -.148 (0) (-.0802) (.333)[ .638;.214 ][ .251;.927 ]<.000152>
 YD/VG ; ZD/DC ;THE/DB    .0696 (0) (.00360) (.333)[ .699;.425 ][ .0551;3.15 ]<.000150>
 YD/VG ; ZD/DC ;PSI/DP    .236 (.282)[ .214;.193 ][ .348;.944 ][ .0381;3.35 ]<.0248>

 XD/UG ;PHI/DA ;THE/DB ;PSI/DP    .685E-4 (.00778) (.333) (.333) (-5.12)<-.315E-6>
 ZD/UG ;PHI/DA ;THE/DB ;PSI/DP    .0149 (0) (.00828) (.333) (.333)<.137E-4>
 YD/VG ;PHI/DA ;THE/DB ;PSI/DP    .00115 (-.00797) (.310) (.333) (.333)<-.315E-6>

 XD/WG ;PHI/DA ;THE/DB ;PSI/DP    .00316 (0) (.00817) (.333) (.333)<.286E-5>
 ZD/WG ;PHI/DA ;THE/DB ;PSI/DP    .0459 (.00768) (-.00805) (.333) (.333)<-.315E-6>
 XD/UG ; ZD/DC ;PHI/DA ;THE/DB    .000940 (0) (.0771) (.333) (.333) (1.21)<.972E-5>

 YD/VG ; ZD/DC ;PHI/DA ;THE/DB    .0244 (0) (0) (.126) (.333) (.333)<.000342>
 YD/VG ; ZD/DC ;PHI/DA ;PSI/DP    .0707 (.333)[ .163;.121 ][ .253;.932 ]<.000299>
 XD/WG ; ZD/DC ;PHI/DA ;THE/DB    .0258 (0) (.0616) (.333) (.333) (.631)<.000111>

 XD/UG ; ZD/DC ;PHI/DA ;THE/DB ;PSI/DP   -.000748 (-.00688) (.333) (.333)<.571E-6>
 YD/VG ; ZD/DC ;PHI/DA ;THE/DB ;PSI/DP   -.0119 (0) (.333) (.333)<-.00132>
 XD/WG ; ZD/DC ;PHI/DA ;THE/DB ;PSI/DP   -.0311 (.00832) (.333) (.333)<-.287E-4>
```

TABLE V-5 CONTINUED
UH-1H TRANSFER FUNCTION FACTORS

CASE 124 20KT BAR OFF

DENOMINATOR: (0) (.187) (.999)[-.203;.328]X[.811;.651]X[.204;.897]<.00709>

CONTROL NUMERATORS:

PHI/DA .571 (0)[-.352;.342]X[.984;.560]X[.830;.926]<.0180>
THE/DB -.133 (0) (.00520) (.170) (.526) (1.05)[.224;.908]<-.6998-4>
PSI/DP -1.04 (1.00)[-.156;.295]X[-.225;.819]X[.815;.676]<-.00721>

PHI/DB .0280 (0) (.910) (5.21)[-.0989;.204]X[.349;.918]<.00466>
PHI/DP .296 (0) (-.722) (.843)[-.205;.297]X[.803;.686]<-.00751>
PHI/DC -.00992 (0) (.624) (-8.48)[-.320;.345]X[.863;1.14]<.00810>

THE/DA .130 (0) (.0126) (.218) (.564)[.260;1.05]<.000216>
THE/DP -.0248 (0) (.0121) (.0920) (.894) (-2.79)[.818;.779]<.227E-4>
THE/DC .0209 (0) (.0111) (.219)[-.132;.958]X[.962;1.28]<.892E-4>

PSI/DA .0831 (.514)[-.271;.336]X[.992;.975]X[-.578;1.91]<.0168>
PSI/DB .0176 (1.00)[-.192;.245]X[.587;1.30]X[-.907;1.58]<.00423>
PSI/DC .358 (1.00)[-.278;.331]X[-.203;.601]X[.924;.742]<.00772>

XD/DB 1.07 (0) (.167) (.523) (1.05)[.225;.911]X[.0226;2.29]<.827>
YD/DA .889 [-.350;.388]X[.981;.559]X[.807;.917]X[.0056;8.53]<.567>
ZD/DC -9.31 (0) (.0109) (.834) (.940)[.125;.423]X[.208;.991]<-.00588>

XD/DC -.0370 (0) (.222)[-.128;.922]X[.957;1.28]X[.00992;8.39]<-.222>
YD/DP 1.41 (-.772) (.837)[-.205;.298]X[.902;.688]X[.0748;2.52]<-.248>
ZD/DB .811 (0) (-.156) (-.399) (1.06)[.207;.804]X[.0538;2.02]<-.178>

PHI/DA ;THE/DB -.0989 (0) (.00707) (.561)[.882;.904]<-.000320>
PHI/DA ;PSI/DP -.616 (.0291)[-.296,.303]X[.947;.553]<-.000503>
THE/DB ;PSI/DP .180 (.00459) (.536) (1.02)[-.110;.358]<.577E-4>

PHI/DB ;PSI/DP -.0383 (.0272) (.960) (3.92)[-.107;.275]<-.000266>
PHI/DP ;THE/DB -.0506 (0) (.00456) (.588) (-.599) (.782)<.592E-4>
PHI/DC ;THE/DB -.0171 (0) (.00701)[.911;1.08]<-.000139>

THE/DA ;PSI/DP -.182 (.0125) (.966)[.0333;.523]<-.000275>
THE/DP ;PHI/DA -.0182 (0) (.0125) (.561) (-1.50) (1.91)<.000297>
THE/DC ;PHI/DA .0120 (0) (.00877) (-.293) (.446) (1.58)<-.211E-4>

PSI/DA ;THE/DB -.0184 (.00704) (.568) (1.48)[-.561;1.87]<-.000295>
PSI/DB ;PHI/DA .00778 (.0256) (.155) (-3.17)[-.0833;1.21]<-.000325>
PSI/DC ;THE/DB -.0616 (.00696)[-.262;.578]X[.999;.951]<-.000130>

PSI/DC ;PHI/DA .203 (.0403)[-.315;.135]X[.969;.642]<.000377>
XD/DB ;PHI/DA .612 (0) (.559)[.880;.902]X[.0227;2.29]<1.85>
XD/DB ;PSI/DP -1.11 (.528) (1.02)[-.107;.158]X[.0248;2.29]<-.401>

YD/DA ;THE/DP -.158 (.00703) (.560)[.813;.894]X[.0063;8.53]<-.00997>
YD/DA ;PSI/DP -1.08 [-.297;.304]X[.983;.558]X[-.0124;8.36]<-.559>
ZD/DC ;PHI/DA -5.31 (0) (.607)[-.404;.333]X[.372;.929]<-.308>

ZD/DC ;THE/DB 1.59 (0) (.0132) (.127) (1.05)[.191;.894]<.000225>
ZD/DC ;PSI/DP 9.68 (.0509) (.972)[.621;.360]X[-.208;.471]<.0117>
XD/DC ;PHI/DA -.0211 (0) (-.300) (.448) (1.62)[.0175;8.13]<.0776>

XD/DC ;THE/DB -.0160 (0) (.348)[-.364;.636]X[.990;1.15]<-.00118>
YD/DC ;PSI/DP .0830 (1.12) (3.47)[-.0866;.870]X[.106;2.82]<.289>
YD/DP ;PHI/DA .542 (1.04) (-1.10)[-.301;.298]X[.895;.556]<-.0170>

YD/DP ;THE/DB -.283 (.00460) (.550) (-.660) (.774)[.0831;2.89]<.001955>
ZD/DB ;PHI/DA .462 (0) (-.801)[.858;.912]X[.0353;1.99]<-.611>
ZD/DB ;PSI/DP -.980 (-.421) (1.02)[-.115;.389]X[.0818;2.04]<.182>

PHI/DA ;THE/DB ;PSI/DP .107 (.00835) (.0283) (.559)<.1818-4>
PHI/DC ;THE/DB ;PSI/DP .0168 (.0119) (.0223) (1.12)<.8929-5>
THE/DC ;PHI/DA ;PSI/DP -.00785 (.0130) (.0417) (1.22)<-.5889-5>

TABLE V-5 CONTINUED
UH-1H TRANSFER FUNCTION FACTORS

CASE 124 20KT BAR OFF

CONTROL NUMERATORS CONCLUDED:

PSI/DC ;PHI/DA ;THE/DB -.0353 (.00713) (.0393) (.718)<-.710E-5>

YD/DB ;PHI/DA ;PSI/DP -.660 (.0281) (.556)[.0248;2.29]<-.0580>
YD/DA ;THE/DB ;PSI/DP .180 (.00850) (.559)[-.0108;4.36]<.0163>
ZD/DC ;PHI/DA ;THE/DB .910 (0) (.00686)[.818;.873]<.00476>

ZD/DC ;THE/DB ;PSI/DP -1.66 (.0123) (1.02)[-.185;.381]<-.00303>
ZD/DC ;PHI/DA ;PSI/DP 5.73 (.0189) (.371)[-.0875;.286]<.00329>
YD/DC ;PHI/DA ;THE/DB -.00916 (0) (-.103) (.282) (1.20)<.000319>

YD/DC ;PHI/DA ;PSI/DP .0255 (.0833) (1.22)[-.0178;3.15]<.0134>
YD/DC ;THE/DB ;PSI/DP .00654 (1.09) (1.53)[-.178;.616]<.00412>
YD/DP ;PHI/DA ;THE/DB -.0936 (.00839) (.557) (.999) (-1.10)<.000877>

ZD/DB ;PHI/DA ;PSI/DP -.499 (.0283) (-.380)[.0328;2.01]<.0217>

ZD/DC ;PHI/DA ;THE/DB ;PSI/DP -.988 (.0119) (.0277)<-.000327>
YD/DC ;PHI/DA ;THE/DB ;PSI/DP .00398 (.0408) (1.30)<.000209>

GUST NUMERATORS:

PHI/UG -.00308 (0) (0) (0) (-.682) (1.06)[.561;.638]<.000849>
THE/UG -.000982 (0) (0) (.184)[.390;.928]U[.980;1.19]<-.000220>
PSI/UG .00919 (0) (0) (.998)[-.368;.815]U[.660;.715]<.000806>

PHI/VG .0108 (0) (0) (.595)[-.203;.315]U[.819;.589]<.000220>
THE/VG -.00245 (0) (0) (0) (.0265) (.825)[.672;.898]<-.672E-5>
PSI/VG -.0215 (0) (0) (1.00)[-.217;.329]U[.780;.648]<-.000979>

PHI/WG .00356 (0) (0) (.537)[-.388;.358]U[.371;1.18]<.000340>
THE/WG .00108 (0) (0) (.0132) (.209) (1.94)[.105;.96']<.533E-5>
PSI/WG .00683 (0) (.670) (.979)[-.298;.338]U[-.20?;.798]<.000325>

PHI/PG .830 (0)[-.243;.316]U[.922;.683]U[.832;.942]<.0343>
THE/PG -.222 (0) (.0258) (-.241) (.289) (.615)[.355;.946]<.000216>
PSI/PG .330 (.977)[-.224;.322]U[.898;.762]U[-.458;1.28]<.0320>

PHI/QG .806 (0) (.241) (.729)[-.606;.364]U[.832;.920]<.0159>
THE/QG .293 (0) (.0123) (.191) (.585) (1.66)[.216;.966]<.000578>
PSI/QG -.0999 (.243) (1.03) (-1.24)[-.376;.353]U[.895;1.97]<.0150>

PHI/RG -.162 (0) (.856) (-1.07)[-.220;.306]U[.818;.732]<.00744>
THE/RG .00631 (0) (0) (.0200) (.352) (-6.36)[.868;.969]<-.000265>
PSI/RG .723 (1.00)[-.195;.308]U[-.225;.466]U[.837;.690]<.00708>

XD/UG .0171 (0) (.184)[.407;.906]U[.979;1.08]U[-.120;1.53]<.00708>
ZD/UG .233 (0) (0) (.158) (.971)[.504;.505]U[.201;.902]<.00742>
YD/VG .0661 (0) (.597)[-.203;.315]U[.818;.587]U[.107;2.29]<.00708>

XD/WG -.00263 (0) (0) (.211) (2.19)[.0948;.95']U[.125;3.48]<-.0131>
ZD/WG .553 (0) (.177)[-.232;.357]U[.982;.839]U[.205;.898]<.00708>

PHI/UG ;THE/DB .000560 (0) (0) (1.11)[.0134;.882]<.000185>
PHI/UG ;PSI/DP .000463 (0) (0) (.0240) (-.855) (2.18)<-.108E-4>
THE/UG ;PHI/DA -.000557 (0) (0) (.598)[.419;1.29]<-.000559>

THE/UG ;PSI/DP .00124 (0)[-.126;.413]U[.911;1.03]<.000224>
PSI/UG ;PHI/DA .00550 (0) (0) (.0365)[.853;.393]<.311E-4>
PSI/UG ;THE/DB -.00157 (0) (-.265) (1.06)[.880;.944]<.000131>

PHI/VG ;THE/DB -.00179 (0) (0) (.00524)[.971;.881]<-.218E-5>
PHI/VG ;PSI/DP -.00877 (0)[-.197;.299]U[.866;.726]<-.000225>
THE/VG ;PHI/DA -.00181 (0) (0) (.0124) (.532) (.728)<-.674E-5>

THE/VG ;PSI/DP .00201 (0) (0) (.0202)[.949;.897]<.000E-5>
PSI/VG ;PHI/DA -.0112 (0)[-.307;.350]U[.979;.569]<-.000521>
PSI/VG ;THE/DB .00377 (0) (0) (.00687) (.572) (.925)<.137E-4>

TABLE V-5 CONTINUED
UH-1H TRANSFER FUNCTION FACTORS

CASE 124 20KT BAR OFF

GUST NUMERATORS CONTINUED:

```
PHI/WG ;THE/DB  -.000647 (0)'(0) (.00757)[ .451; 1.18 ]<-.687E-5>
PHI/WG ;PSI/DP  -.00571  (0) (.0105) (.410)[ -.364;.297 ]<-.217E-5>
THE/WG ;PHI/DA   .000612 (0) (0) (.0160)[ .675;.567 ]<.314E-5>

THE/WG ;PSI/DP  -.000950 (0) (.0130) (2.42)[ -.0500;.465 ]<-.647E-5>
PSI/WG ;PHI/DA   .00360  (0) (.0589) (.589)[ -.309;.378 ]<.176E-4>
PSI/WG ;THE/DB  -.00120  (0) (.00751) (1.19)[ -.277;.773 ]<-.639E-5>

PHI/PG ;THE/DB  -.139  (0) (.00689) (.565)[ .441;.949 ]<-.000481>
PHI/PG ;PSI/DP  -.958  (.0275)[ -.232;.301 ][ .898;.667 ]<-.00106>
THE/PG ;PHI/DA  -.128  (0) (.00784) (.560)[ .425;.942 ]<-.000499>

THE/PG ;PSI/DP   .238  (.0198) (-.486) (.596)[ .371;.487 ]<-.000121>
PSI/PG ;PHI/DA   .119  (.0183) (.320) (-.588)[ .899;.909 ]<-.000249>
PSI/PG ;THE/DB  -.0532 (.00685) (.571) (1.35)[ -.822;1.26 ]<-.000485>

PHI/QG ;THE/DB  -.148  (0) (.00883) (.557)[ .888;.860 ]<-.000537>
PHI/QG ;PSI/DP  -.806  (.0375) (.173) (.671)[ -.488;.280 ]<-.000274>
THE/QG ;PHI/DA   .166  (0) (.0121) (.560)[ .828;.934 ]<.000983>

THE/QG ;PSI/DP  -.306  (.0122) (.552) (1.65)[ -.0838;.833 ]<-.000617>
PSI/QG ;PHI/DA  -.124  (.0219) (.330) (-.611)[ .857;.862 ]<.000406>
PSI/QG ;THE/DB   .0121 (.00878) (.565) (-1.31) (2.41) (2.60) <-.000493>

PHI/RG ;THE/DP   .0279 (0) (.00528) (-.939)[ .998;.731 ]<-.735E-4>
PHI/RG ;PSI/DP  -.0862 (.0354)[ -.256;.301 ][ .984;.733 ]<-.795E-4>
THE/RG ;PHI/DA   .00378 (0) (.0124) (.554) (-2.92) (3.00) <-.000227>

THE/PG ;PSI/DP   .0111 (.0129) (-.740) (.893)[ .252;.491 ]<-.227E-4>
PSI/RG ;PHI/DA   .426  (.0263)[ -.297;.296 ][ .941;.560 ]<.000308>
PSI/RG ;THE/DB  -.125  (.00524) (.591) (1.03)[ -.168;.819 ]<-.699E-4>

 YD/UG ;PHI/DA   .00986 (0) (.598)[ .564;1.25 ][ -.187;1.41 ]<.0180>
 YD/UG ;THE/DB  -.00198 (0) (.118) (.853) (1.06)[ .222;.797 ]<-.699E-4>
 YD/UG ;PSI/DP  -.0178 [ -.124;.815 ][ .927;.999 ][ .0158;1.58 ]<-.00721>

 ZD/UG ;PHI/DA   .133  (0) (0)[ .298;.812 ][ .501;.912 ]<.0189>
 ZD/UG ;THE/DB  -.0396 (0) (0) (.155) (1.05)[ .246;.920 ]<-.00549>
 ZD/UG ;PSI/DP  -.242  (0) (.903)[ .559;.831 ][ -.159;.832 ]<-.00757>

 YD/VG ;PHI/DA   .0282 (0) (.589)[ -.271;.298 ][ .890;.863 ]<.000308>
 YD/VG ;THE/DB  -.0113 (0) (.00528)[ .971;.881 ][ .115;2.26 ]<-.700E-4>
 YD/VG ;PSI/DP  -.0381 [ -.196;.299 ][ .872;.724 ][ .115;2.01 ]<-.00721>

 XD/WG ;PHI/DA  -.00150 (0) (0)[ .673;.571 ][ -.00252;1.60 ]<-.00636>
 XD/WG ;THE/DB  -.000700 (0) (0) (.332) (1.24)[ -.0610;.813 ]<-.000191>
 YD/WG ;PSI/DP   .00281 (0) (2.98)[ -.0518;.466 ][ .126;2.96 ]<.0160>

 ZD/WG ;PHI/DA   .116  (0) (.561)[ -.387;.389 ][ .888;.913 ]<.0180>
 ZD/WG ;THE/DB  -.0967 (0) (.00523) (.168) (1.08)[ .231;.901 ]<-.699E-4>
 ZD/WG ;PSI/DP  -.573 [ -.0807;.331 ][ -.295;.407 ][ .935;.934 ]<-.00721>

 XD/UG ; ZD/DC  -.152  (0) (.0184) (1.16)[ .729;.986 ][ -.214;1.36 ]<-.00588>
 YD/VG ; ZD/DC  -.602  (0) (.0167) (.609)[ .289;.828 ][ .108;2.31 ]<-.00588>

PHI/UG ;THE/DB ;PSI/DP  -.000121 (0) (.0272) (2.50) <-.826E-5>
THE/UG ;PHI/DA ;PSI/DP   .000719 (0) (.0291) (.728) <.156E-4>
PSI/UG ;PHI/DA ;THE/DB  -.000946 (0) (.0256) (.817) <-.101E-4>

PHI/VG ;THE/DB ;PSI/DP   .000762 (0) (.00459) (.518) <.180E-5>
THE/VG ;PHI/DA ;PSI/DP   .00119  (0) (.0125) (.575) <.855E-5>
PSI/VG ;PHI/DA ;THE/DB   .00210  (0) (.00704) (.568) <.920E-5>

PHI/WG ;THE/DB ;PSI/DP   .00102  (0) (.0152) (.0165) <.256E-5>
THE/WG ;PHI/DA ;PSI/DP  -.000570 (0) (.0130) (.0497) <-.369E-6>
PSI/WG ;PHI/DA ;THE/DB  -.000632 (0) (.00643) (.0630) <-.256E-6>
```

TABLE V-5 CONTINUED
UH-1H TRANSFER FUNCTION FACTORS

CASE 124 20KT BAR OFF

GUST NUMERATORS CONCLUDED:

PHI/DG ;THE/DB ;PSI/DP .158 (.00833) (.0275) (.556) <.2098-4>
THE/DG ;PHI/DA ;PSI/DP .141 (.00840) (.0273) (.557) <.1998-4>
PSI/DG ;PHI/DA ;THE/DB -.0189 (.00885) (.0493) (.580) <-.4578-5>

PHI/DG ;THE/DB ;PSI/DP .159 (.0106) (.0292) (.556) <.2578-4>
THE/DG ;PHI/DA ;PSI/DP -.181 (.0122) (.0275) (.553) <-.3808-4>
PSI/DG ;PHI/DA ;THE/DB .0192 (.0167) (.0570) (.576) <.1058-4>

PHI/BG ;THE/DB ;PSI/DP .00765 (.00712) (.0328) (.823) <.1978-5>
THE/BG ;PHI/DA ;PSI/DP .00656 (.0122) (.0461) (.832) <.1888-5>
PSI/BG ;PHI/DA ;THE/DB -.0719 (.00864) (.0261) (.575) <-.9538-5>

YD/DG ;PHI/DA ;THE/DB -.00111 (0) (.510)[.858; .952]<-.300320>
YD/DG ;PHI/DA ;PSI/DP -.0106 (.0291) (.705)[.0328; 1.52]<-.0005033>
YD/DG ;THE/DB ;PSI/DP .00175 (.330) (1.05)[.0360; .309]<.5778-4>

ZD/DG ;PHI/DA ;THE/DB -.0226 (0) (0)[.473; .924]<-.01931>
ZD/DG ;PHI/DA ;PSI/DP -.148 (0) (.0289)[.407; .956]<-.0005283>
ZD/DG ;THE/DB ;PSI/DP .0810 (0) (1.01)[-.139; .371]<.00571>

YD/DG ;PHI/DA ;THE/DB -.00486 (0) (.00865)[.991; .878]<-.9598-5>
YD/DG ;PHI/DA ;PSI/DP -.0179 [-.302; .288][.997; .563]<-.0005033>
YD/DG ;THE/DB ;PSI/DP .00646 (.00459) (.512)[.183; 1.95]<.5778-4>

XD/DG ;PHI/DA ;THE/DB -.000335 (0) (0)[.558; .597]<-.0001161>
XD/DG ;PHI/DA ;PSI/DP .00167 (0) (.0491)[-.0132; 3.31]<.0009000>
YD/DG ;THE/DB ;PSI/DP .000530 (0) (1.27)[-.194; .587]<.0002322>

ZD/DG ;PHI/DA ;THE/DB -.0552 (0) (.00709)[.953; .905]<-.000320>
ZD/DG ;PHI/DA ;PSI/DP -.341 (.0288) (.508)[-.302; .317]<-.0005033>
ZD/DG ;THE/DB ;PSI/DP .100 (.00863) (1.01)[-.124; .359]<.5778-4>

YD/DG ; ZD/DC ;PHI/DA -.0869 (0)[-.359; 1.28][.624; 1.47]<-.108>
YD/DG ; ZD/DC ;THE/DB .0215 (0) (.211) (1.04)[.118; .689]<.00225>
YD/DG ; ZD/DC ;PSI/DP .155 (.605)[-.109; .280][.181; 1.36]<.0137>

YD/DG ; ZD/DC ;PHI/DA -.255 (0) (-.0174) (.620)[.0953; .367]<.0003722>
YD/DG ; ZD/DC ;THE/DB .103 (0) (.0127) (.333)[.138; 2.27]<.00225>
YD/DG ; ZD/DC ;PSI/DP .368 (.0502)[.659; .819][.110; 2.06]<.0137>

YD/DG ;PHI/DA ;THE/DB ;PSI/DP .00104 (.0277) (.490) <.1918-4>
ZD/DG ;PHI/DA ;THE/DB ;PSI/DP .0248 (0) (.0283) <.0006988>
YD/DG ;PHI/DA ;THE/DB ;PSI/DP .00338 (.00839) (.567) <.1918-4>

XD/DG ;PHI/DA ;THE/DB ;PSI/DP .000121 (0) (.0444) <.1828-4>
ZD/DG ;PHI/DA ;THE/DB ;PSI/DP .0596 (.00438) (.0283) <.1918-4>
YD/DG ; ZD/DC ;PHI/DA ;THE/DB .0123 (0)[.899; .622]<.00876>

YD/DG ; ZD/DC ;PHI/DA ;THE/DB .0419 (0) (.0134) (.353) <.0002083>
YD/DG ; ZD/DC ;PHI/DA ;PSI/DP .168 (.257)[.0777; .276]<.00329>
YD/DG ; ZD/DC ;PHI/DA ;THE/DB .00875 (0) (-.0640) (.570) <-.0003119>

YD/DG ; ZD/DC ;PHI/DA ;THE/DB ;PSI/DP -.0105 (.0110) <-.0003277>
YD/DG ; ZD/DC ;PHI/DA ;THE/DB ;PSI/DP -.0296 (.0114) <-.0003277>
YD/DG ; ZD/DC ;PHI/DA ;THE/DB ;PSI/DP -.00519 (.0402) <-.0003209>

TABLE V-5 CONTINUED
UH-1H TRANSFER FUNCTION FACTORS

CASE 124 20KT BAR ON

DENOMINATOR: (0) (.0401) (.559)[.150;.161][.488;.955][.318;1.02][.269;1.95]<.00165>

CONTROL NUMERATORS:

PHI/DA .571 (0) (.333) (.552)[.162;.160][.836;.848][.319;1.02]<.00199>
THE/DB -.173 (0) (.00609) (.0383) (.333) (.562)[.877;.935][.265;1.89]<-.2118-8>
PSI/DP -1.04 (.550)[-.126;.140][.536;.140][.320;.955][.303;2.00]<-.000802>

PHI/DR .0280 (0) (.330) (.333) (.933) (5.23)[-.00876;.218][.369;.915]<.000533>
PHI/DP .296 (0) (-.539) (.579)[.198;.176][.876;.507][.379;1.08]<-.000805>
PHI/DC -.00992 (0) (.389) (-8.20)[.155;.161][.789;.982][.396;1.10]<.000877>

THE/DA .130 (0) (.0105) (.333) (.565)[.812;.3[illegible][.267;1.02]<.3148-8>
THE/DP -.0288 (0) (.413) (.563) (1.27) (-2.16)[.925;.0167][-.103;1.77]<.1358-8>
THE/DC .0209 (0) (.0107) (1.28)[.0828;.206][.910;.875][.221;2.08]<.1208-8>

PSI/DA .0831 (.333) (.573) (1.29)[.194;.157][.326;1.01][-.578;1.91]<.00187>
PSI/DR .0176 (-.145) (.171) (.333) (.166) (-1.92)[-.417;.964][.491;2.23]<.000870>
PSI/DC .358 (.686)[.167;.167][.369;.198][.127;.943][.286;1.95]<.000858>

YD/DR 1.07 (0) (.0134) (.333) (.560)[.876;.931][.267;1.89][.0219;2.28]<.108>
YD/DA .899 (.333) (.550)[.166;.141][.807;.981][.317;1.02][.00558;8.53]<.0630>
ZD/DC -9.31 (0) (.0137)[.179;.165][.518;.789][.275;1.07][.271;1.95]<-.00925>

XD/DC -.0379 (0) (1.32)[.0820;.206][.928;.898][.228;1.98][.00886;8.25]<-.0357>
YD/DP 1.81 (.304) (.491) (.694) (-.699)[.0829;.171][.352;1.02][.0935;2.95]<-.0271>
ZD/DR .811 (0) (.0330) (.333) (-.401)[.500;.952][.177;1.91][.122;1.95]<-.0889>

PHI/DA ;THE/DR -.0989 (0) (.00707) (.333) (.333) (.561)[.882;.904]<-.3568-8>
PHI/DA ;PSI/DP -.616 (.0291) (.333) (.586)[.160;.138][.312;.979]<-.5598-8>
THE/DR ;PSI/DP .180 (.00456) (.333) (.561)[.306;.105][.304;1.95]<.6828-5>

PHI/DR ;PSI/DP -.0343 (.0272) (.333) (.335) (.964) (3.91)[-.104;.278]<-.2958-8>
PHI/DP ;THE/DR -.0506 (0) (.00438) (.333) (-.858) (.566)[.852;.559]<.5988-5>
PHI/DC ;THE/DR -.0168 (0) (.00701) (.333) (.391)[.829;.991]<-.1518-8>

THE/DA ;PSI/DP -.182 (.0125) (.333) (.333) (.566)[.0333;.523]<-.3058-8>
THE/DP ;PHI/DA -.0182 (0) (.0125) (.333) (.407) (.563) (-1.36) (1.70)<.3168-8>
THE/DC ;PHI/DA .0120 (0) (.00890) (-.212) (.333) (1.82)[.905;.850]<-.2168-5>

PSI/DA ;THE/DR -.0188 (.00708) (.333) (.333) (.568) (1.88)[-.581;1.87]<-.1288-8>
PSI/DR ;PHI/DA .00778 (.0256) (.333) (.333) (.355) (-3.17)[-.0833;1.21]<-.3618-8>
PSI/DC ;THE/DR -.0616 (.00636) (.333) (.702)[.188;.201][.289;1.88]<-.1888-8>

PSI/DC ;PHI/DA .201 (.0403) (.333) (.698)[.176;.153][.316;.971]<.8198-8>
XD/DR ;PHI/DA .612 (0) (.333) (.333) (.559)[.880;.902][.0227;2.29]<.161>
XD/DR ;PSI/DP -1.11 (.333) (.558)[.291;.104][.304;1.95][.1249;2.29]<-.0886>

YD/DA ;THE/DR -.158 (.00703) (.333) (.333) (.560)[.811;.898][.00663;8.53]<-.001111>
YD/DA ;PSI/DP -1.08 (.333) (.585)[.162;.118][.311;.979][-.0125;8.36]<-.0621>
ZD/DC ;PHI/DA -5.11 (0) (.333)[.0990;.168][.878;.769][.281;1.07]<-.0337>

ZD/DC ;THE/DR 1.59 (0) (.0101) (.0286) (.333)[.855;.906][.266;1.88]<.000886>
ZD/DC ;PSI/DP 9.68 [.677;.0812][.235;.158][.311;.971][.302;2.00]<.00152>
XD/DC ;PHI/DA -.0211 (0) (-.218) (.333) (1.52)[.916;.867][.0327;3.91]<.00783>

XD/DC ;THE/DR -.0160 (0) (.292) (.333) (1.18)[-.0186;.225][.280;1.88]<-.000332>
YD/DC ;PSI/DR .0810 (.365) (1.13)[.168;.215][.805;2.28][.0572;2.57]<.0121>
YD/DP ;PHI/DA .592 (.333) (.537) (1.00) (-1.10)[.191;.115][.109;.983]<-.001895>

YD/DP ;THE/DR -.283 (.00459) (.108) (.333) (.537) (-.648) (.648)[.0967;2.91]<.0002177>
ZD/DR ;PHI/DA .862 (0) (.333) (.333) (-.401)[.858;.912][.0351;1.99]<-.0678>
ZD/DR ;PSI/DP -.880 (.333) (-.332)[.292;.110][.279;1.91][.0566;2.02]<.03027>

PHI/DA ;THE/DR ;PSI/DP .187 (.00835) (.0283) (.333) (.333) (.559)<.1578-5>
PHI/DC ;THE/DR ;PSI/DP .0168 (.0114) (.0223) (.333) (.333) (1.12)<.5158-6>
THE/DC ;PHI/DA ;PSI/DP -.00795 (.0110) (.0437) (.333) (.333) (1.22)<-.6048-6>

TABLE V-5 CONTINUED
UH-1H TRANSFER FUNCTION FACTORS

CASE 124 20KT BAR ON

CONTROL NUMERATORS CONCLUDED:

```
PSI/DC ;PHI/DA ;THR/DB  -.0353 (.00713) (.0391) (.333) (.333) (.718)<-.789E-6>

YD/DB ;PHI/DA ;PSI/DP  -.660 (.0281) (.333) (.333) (.556)[ .0244;2.29 ]<-.00600>
YD/DA ;THE/DR ;PSI/DP   .180 (.00850) (.333) (.333) (.559)[ -.0108;4.36 ]<.001815>
ZD/DC ;PHI/DA ;THE/DB   .910 (0) (.00686) (.333) (.333)[ .418;.873 ]<.000529>

ZD/DC ;THE/DB ;PSI/DP  -1.66 (.0123) (.333)[ .278;.114 ][ .303;1.98 ]<-.000136>
ZD/DC ;PHI/DA ;PSI/DP   5.73 (.0190) (.333)[ .318;.102 ][ .298;.989 ]<.000365>
YD/DC ;PHI/DA ;THR/DR  -.00916 (0) (-.103) (.282) (.333) (.333) (1.20)<.355E-4>

YD/DC ;PHI/DA ;PSI/DP   .0255 (.0432) (.333) (.364) (1.21)[ -.0223;3.03 ]<.001488>
YD/DC ;THR/DB ;PSI/DP   .00654 (.333) (1.32)[ .391;.206 ][ .322;1.98 ]<.000458>
YD/DP ;PHI/DA ;THR/DB  -.0936 (.00839) (.333) (.333) (.557) (.989) (-1.10)<.530E-4>

ZD/DB ;PHI/DA ;PSI/DP  -.499 (.0283) (.333) (.333) (-.380)[ .0328;2.01 ]<.002815>

ZD/DC ;PHI/DA ;THR/DB ;PSI/DP  -.988 (.0119) (.0277) (.333) (.333)<-.363E-4>
YD/DC ;PHI/DA ;THR/DB ;PSI/DP   .00398 (.0408) (.333) (.333) (1.30)<.232E-4>
```

GUST NUMERATORS:

```
PHI/DG  -.00308 (0) (0) (0) (.308) (.937)[ -.209;.813 ][ .360;1.01 ]<-.000153>
THR/DG  -.000982 (0) (0) (.0803) (.342) (.624)[ .276;1.29 ][ .568;1.90 ]<-.513E-4>
PSI/DG   .00919 (0) (0) (-.0681) (.129) (.830)[ .298;.978 ][ .307;2.02 ]<-.000127>

PHI/VG   .0108 (0) (0) (.529)[ .150;.169 ][ .658;.538 ][ .389;1.04 ]<.518E-4>
THR/VG  -.00245 (0) (0) (0) (.0107) (.577)[ .858;.568 ][ .0601;1.92 ]<-.179E-4>
PSI/VG  -.0215 (0) (0) (.563)[ .198;.160 ][ .335;.940 ][ .318;2.04 ]<-.00114>

PHI/WG   .00356 (0) (0) (.368)[ .161;.157 ][ .884;.988 ][ .207;1.13 ]<.367E-4>
THR/WG   .00108 (0) (0) (.0115) (.158) (.207)[ .729;.775 ][ .402;1.89 ]<.874E-6>
PSI/WG   .00683 (0)[ .225;.146 ][ .508;.293 ][ .317;.908 ][ .226;1.87 ]<.161E-4>

PHI/PG   .830 (0) (.341) (.534)[ .186;.169 ][ .888;.936 ][ .373;1.00 ]<.00381>
THR/PG  -.222 (0) (-.00730) (.0158) (.338) (.561)[ .881;.920 ][ .0833;1.96 ]<.182E-4>
PSI/PG   .330 (.468)[ .0999;.206 ][ .751;.800 ][ .416;1.23 ][ -.147;1.50 ]<.00355>

PHI/QG   .806 (0) (.325) (.575)[ .196;.140 ][ .328;.803 ][ .269;.956 ]<.00173>
THR/QG   .291 (0) (.0116) (.0518) (.337) (.560)[ .861;1.01 ][ .829;1.87 ]<.000118>
PSI/QG  -.0999 (.272) (.513) (-.867)[ .268;.111 ][ .199;1.05 ][ .559;3.19 ]<.00167>

PHI/RG  -.162 (0) (.507) (-.882)[ .148;.173 ][ .905;.584 ][ .376;1.05 ]<.000807>
THR/RG   .00631 (0) (.413) (.541) (1.63) (-5.83)[ .851;.0186 ][ -.128;1.48 ]<-.804E-5>
PSI/RG   .723 (.561)[ -.138;.152 ][ .545;.152 ][ .318;.958 ][ .100;1.99 ]<.000786>

XD/QG   .0171 (0) (.0403) (.322) (.597)[ .519;1.39 ][ .0898;1.45 ][ .192;1.75 ]<.00165>
ZD/QG   .233 (0) (0)[ .968;.0459 ][ .522;.975 ][ .270;.988 ][ .263;1.95 ]<.00173>
YD/VG   .0661 (0) (.515)[ .117;.169 ][ .702;.458 ][ .158;1.02 ][ .118;2.79 ]<.00165>

XD/WG  -.00263 (0) (0) (.138) (.253)[ .741;.789 ][ .380;2.08 ][ .157;3.10 ]<-.0023E>
ZD/WG   .853 (0) (.0193)[ .170;.162 ][ .888;.882 ][ .112;.987 ][ .271;1.95 ]<.00165>

PHI/QG ;THR/DR   .000560 (0) (0) (.106) (.333) (.951)[ .184;.552 ]<.166E-4>
PHI/QG ;PSI/DP   .000463 (0) (0) (.0276) (.333) (2.22)[ -.0878;1.15 ]<.124E-4>
THR/QG ;PHI/DA  -.000557 (0) (0) (.133) (.342) (.638)[ .420;1.28 ]<-.618E-4>

THR/QG ;PSI/DP   .00124 (0) (.333) (.689)[ .266;.147 ][ .332;2.01 ]<.249E-4>
PSI/QG ;PHI/DA   .00550 (0) (0) (.0268) (.333) (.812)[ .302;.996 ]<.201E-4>
PSI/QG ;THR/DB  -.00157 (0) (-.113) (.146) (.333) (.435)[ .301;1.97 ]<.146E-4>

PHI/VG ;THR/DB  -.00179 (0) (0) (.00626) (.333) (.585)[ .636;.567 ]<-.658E-6>
PHI/VG ;PSI/DP  -.00477 (0) (.333) (.469)[ .103;.174 ][ .460;1.05 ]<-.250E-4>
THR/VG ;PHI/DA  -.00141 (0) (0) (.0104) (.333) (.583)[ .865;.584 ]<-.977E-6>

THR/VG ;PSI/DP   .00201 (0) (0) (.0128) (.333) (.573)[ .185;1.92 ]<.180E-4>
PSI/VG ;PHI/DA  -.0112 (0) (.333) (.562)[ .200;.159 ][ .315;.966 ]<-.592E-4>
PSI/VG ;THR/DR   .00177 (0) (0) (.00703) (.333) (.568)[ .318;1.98 ]<.197E-4>
```

TABLE V-5 CONTINUED
UH-1H TRANSFER FUNCTION FACTORS

CASE 124 20KT BAR ON

GUST NUMERATORS CONTINUED:

```
 PRI/WG :THE/DB  -.000647 (0) (0) (-.00759) (.333) (.369)[ .863; 1.12 ]<-.751E-6>
 PRI/WG :PSI/DP  -.00571 (0) (-.0105) (.333)[ .231;.115 ][ .248;.956 ]<-.282E-6>
 THE/WG :PHI/DA   .000612 (0) (0) (.0156) (.258) (.333)[ .638;.663 ]<.356E-6>

 THE/WG :PSI/DP  -.000950 (0) (.0130) (.333)[ .373;.209 ][ .637;2.00 ]<-.719E-6>
 PSI/WG :PHI/DA   .00160 (0) (.0595) (.333)[ .241;.174 ][ .316;.956 ]<.195E-5>
 PSI/WG :THE/DB  -.00120 (0) (.00751) (.333)[ .568;.273 ][ .229;1.78 ]<-.710E-6>

 PHI/PG :THE/DB  -.138 (0) (.00488) (.333) (.341) (.569)[ .882;.937 ]<-.513E-8>
 PHI/PG :PSI/DP  -.958 (.0275) (.333) (.529)[ .137;.157 ][ .804;1.01 ]<-.000114>
 THE/PG :PHI/DA  -.128 (0) (.00784) (.333) (.338) (.559)[ .826;.935 ]<-.553E-8>

 THE/PG :PSI/DP   .238 (.0196) (.101) (-.116) (.333) (.559)[ .0951;1.88 ]<-.359E-8>
 PSI/PG :PHI/DA   .119 (.0182) (.183) (.333) (-.382) (.896)[ .262;1.11 ]<-.277E-8>
 PSI/PG :THE/DB  -.0512 (.00685) (.333) (.606)[ .912;.525 ][ -.119;1.56 ]<-.695E-8>

 PHI/QG :THE/DB  -.189 (0) (.00886) (.125) (.333) (.559)[ .847;.872 ]<-.602E-8>
 PHI/QG :PSI/DP  -.806 (.0362) (.333) (.574)[ .202;.0792 ][ .160;.933 ]<-.304E-8>
 THE/QG :PHI/DA   .166 (0) (.0121) (.333) (.337) (.560)[ .829;.928 ]<.000109>

 THE/QG :PSI/DP  -.305 (.0122) (.333) (.559)[ .301;.161 ][ .455;1.98 ]<-.708E-8>
 PSI/QG :PHI/DA  -.128 (.0218) (.201) (.333) (-.902) (.983)[ .287;1.13 ]<.852E-8>
 PSI/QG :THE/DB   .0121 (.00880) (.266) (.333) (.572) (-.784)[ .633;3.59 ]<-.548E-8>

 PHI/RG :THE/DB   .0279 (0) (.00515) (.333) (.896) (-.788)[ .987;.688 ]<-.778E-5>
 PHI/RG :PSI/DP  -.0462 (.0353) (.333) (.804)[ .158;.186 ][ .137;.972 ]<-.883E-5>
 THE/RG :PHI/DA   .00178 (0) (.0128) (.333) (.408) (.538) (-2.69) (2.71) <-.250E-8>

 THE/RG :PSI/DP   .0111 (.0129) (.197) (-.202) (.333) (.819)[ .0896;1.78 ]<-.252E-5>
 PSI/RG :PHI/DA   .426 (.0263) (.333) (.559)[ .156;.130 ][ .332;.981 ]<.382E-8>
 PSI/RG :THE/DB  -.125 (.00522) (.333) (.574)[ .289;.129 ][ .301;1.93 ]<-.777E-5>

  XD/TG :PHI/DA   .00986 (0) (.121) (.333) (.607)[ .478;1.18 ][ -.0442;1.89 ]<.00199>
  XD/TG :THE/DB  -.00194 (0) (.0100) (.333) (.512)[ .882;.768 ][ .272;1.90 ]<-.211E-8>
  XD/TG :PSI/DP  -.0178 (.305) (.628)[ .206;.186 ][ .0638;1.69 ][ .116;1.97 ]<-.000802>

  ZD/TG :PHI/DA   .131 (0) (0) (.0521) (.333)[ .878;.962 ][ .265;.987 ]<.00209>
  ZD/TG :THE/DB  -.0196 (0) (0) (.0330) (.333)[ .512;.958 ][ .260;1.89 ]<-.00182>
  ZD/TG :PSI/DP  -.242 (0) (.0587)[ .216;.122 ][ .295;.999 ][ .903;2.00 ]<-.0009B1>

  YD/YG :PHI/DA   .0282 (0) (.333)[ .202;.112 ][ .979;.981 ][ .307;.979 ]<.262E-8>
  YD/YG :THE/DB  -.0111 (0) (.00625) (.333) (.536)[ .658;.668 ][ .121;2.76 ]<-.211E-8>
  YD/YG :PSI/DP  -.0381 (.202) (.507)[ .0642;.167 ][ .402;1.03 ][ .135;2.63 ]<-.000802>

  XD/WG :PHI/DA  -.00150 (0) (0) (.241) (.333)[ .695;.667 ][ -.00851;3.43 ]<-.000779>
  XD/WG :THE/DB  -.000700 (0) (0) (.0734) (.333)[ .590;.676 ][ .253;1.85 ]<-.269E-8>
  XD/WG :PSI/DP   .00281 (0) (.166)[ .174;.208 ][ .714;2.18 ][ .0786;2.65 ]<.001779>

  ZD/WG :PHI/DA   .116 (0) (.333)[ .178;.160 ][ .854;.879 ][ .311;.979 ]<.00199>
  ZD/WG :THE/DB  -.0967 (0) (.00612) (.0342) (.333)[ .896;.938 ][ .267;1.89 ]<-.211E-8>
  ZD/WG :PSI/DP  -.571 [ .555;.136 ][ -.106;.186 ][ .112;.941 ][ .105;2.01 ]<-.000802>

  XD/TG : ZD/DC  -.152 (0) (.0184) (.359)[ -.188;1.15 ][ .637;1.60 ][ .192;1.86 ]<-.000255>
  YD/WG : ZD/DC  -.602 (0)[ .219;.0941 ][ .687;.962 ][ .326;1.02 ][ .118;2.81 ]<-.000255>

 PHI/QG :THE/DB :PSI/DP  -.000121 (0) (.0272) (.333) (.333) (2.50) <-.918E-6>
 THE/QG :PHI/DA :PSI/DP   .000739 (0) (.0291) (.333) (.333) (.728) <.178E-5>
 PSI/QG :PHI/DA :THE/DB  -.003986 (0) (.0256) (.333) (.333) (.817) <-.112E-5>

 PHI/PG :THE/DB :PSI/DP   .000762 (0) (.00859) (.333) (.333) (.518) <.200E-6>
 THE/PG :PHI/DA :PSI/DP   .00119 (0) (.0125) (.333) (.333) (.575) <.950E-6>
 PSI/PG :PHI/DA :THE/DB   .00230 (0) (.00704) (.333) (.333) (.568) <.102E-5>

 PHI/WG :THE/DB :PSI/DP   .00102 (0) (.0152) (.0155) (.333) (.333) <.288E-7>
 THE/WG :PHI/DA :PSI/DP  -.000570 (0) (.0117) (.0097) (.333) (.333) <-.809E-7>
 PSI/WG :PHI/DA :THE/DB  -.000632 (0) (.00641) (.0630) (.333) (.333) <-.284E-7>
```

MICROFILMED FROM
BEST AVAILABLE COPY

TABLE V-5 CONTINUED
UH-1H TRANSFER FUNCTION FACTORS

CASE 124 20KT BAR ON

GUST NUMERATORS CONCLUDED:

PHI/PG ;THE/DB ;PSI/DP .158 (.00833) (.0275) (.333) (.333) (.564) <.2278-5>
THE/PG ;PHI/DA ;PSI/DP .141 (.00840) (.0272) (.333) (.333) (.557) <.1998-5>
PSI/PG ;PHI/DA ;THE/DB -.0189 (.00845) (.0491) (.333) (.333) (.580) <-.5088-6>

PHI/QG ;THE/DB ;PSI/DP .150 (.0106) (.0297) (.333) (.333) (.556) <.7158-5>
THE/QG ;PHI/DA ;PSI/DP -.183 (.0122) (.0275) (.333) (.333) (.558) <-.3788-5>
PSI/QG ;PHI/DA ;THE/DB .0192 (.0167) (.0570) (.333) (.333) (.576) <.1178-5>

PHI/RG ;THE/DB ;PSI/DP .00765 (.00712) (.0328) (.333) (.333) (.823) <.1688-6>
THE/RG ;PHI/DA ;PSI/DP .00656 (.0122) (.0461) (.333) (.333) (.397) <.1608-6>
PSI/RG ;PHI/DA ;THE/DB -.0739 (.00864) (.0261) (.333) (.333) (.575) <-.1078-5>

ZD/DG ;PHI/DA ;THE/DB -.00111 (0) (.333) (.333) (.510)[.454;.752]<-.3568-8>
ZD/DG ;PHI/DA ;PSI/DP -.0106 (.0291) (.308) (.333) (.646)[.0565;1.67]<-.5598-8>
ZD/DG ;THE/DB ;PSI/DP .00175 (.333) (.496)[.358;.0765]X[.308;1.98]<.6428-5>

ZD/DG ;PHI/DA ;THE/DB -.0226 (0) (0) (.333) (.333)[.877;.928]<-.00215>
ZD/DG ;PHI/DA ;PSI/DP -.148 (0) (.0307) (.0383) (.333)[.286;1.02]<-.5868-8>
ZD/DG ;THE/DB ;PSI/DP .0410 (0) (.333)[.281;.111]X[.304;1.98]<.000635>

YD/YG ;PHI/DA ;THE/DB -.00486 (0) (.00865) (.333) (.333)[.991;.478]<-.1078-5>
YD/YG ;PHI/DA ;PSI/DP -.0179 (.333) (.526)[.193;.135]X[.310;.987]<-.5598-8>
YD/YG ;THE/DB ;PSI/DP .00646 (.00455) (.182) (.333) (.536)[.163;2.59]<.6428-5>

ZD/WG ;PHI/DA ;THE/DB -.000395 (0) (0) (.333) (.333)[.559;.597]<-.1568-8>
ZD/WG ;PHI/DA ;PSI/DP .00167 (0) (.0490) (.333) (.365)[-.0188;3.17]<.000100>
ZD/WG ;THE/DB ;PSI/DP .000530 (0) (.333)[.385;.196]X[.318;1.95]<.2588-8>

ZD/RG ;PHI/DA ;THE/DB -.0552 (0) (.00708) (.333) (.333)[.853;.905]<-.3568-8>
ZD/RG ;PHI/DA ;PSI/DP .0381 (0) (.0288) (.333)[.191;.136]X[.310;.953]<.5598-5>
ZD/WG ;THE/DB ;PSI/DP .100 (.00859) (.333)[.297;.105]X[.306;1.95]<.6428-5>

ZD/ZG ; ZD/DC ;PHI/DA -.0869 (0) (.333) (.155)[-.282;1.27]X[.529;1.83]<-.0337>
ZD/ZG ; ZD/DC ;THE/DB .0215 (0) (.0811) (.333)[.513;.649]X[.278;1.90]<.000886>
ZD/ZG ; ZD/DC ;PSI/DP .155 (.253)[.388;.0662]X[.0458;1.83]X[.280;2.07]<.00152>

YD/YG ; ZD/DC ;PHI/DA -.255 (0) (-.0739) (.333)[.905;.288]X[.286;.976]<.000899>
YD/YG ; ZD/DC ;THE/DB .101 (0) (.00906) (.333)[.646;.413]X[.130;2.77]<.000886>
YD/YG ; ZD/DC ;PSI/DP .368 (.184)[.828;.0583]X[.362;1.08]X[.130;2.66]<.00152>

ZD/DG ;PHI/DA ;THE/DB ;PSI/DP .00104 (.0277) (.333) (.113) (.490) <.1578-5>
ZD/DG ;PHI/DA ;THE/DB ;PSI/DP .0288 (0) (.0283) (.333) (.333) <.7658-8>
YD/YG ;PHI/DA ;THE/DB ;PSI/DP .00308 (.00839) (.333) (.333) (.587) <.1578-5>

ZD/WG ;PHI/DA ;THE/DB ;PSI/DP .000321 (0) (.0844) (.333) (.333) <.1588-5>
ZD/WG ;PHI/DA ;THE/DB ;PSI/DP .0596 (.00838) (.0293) (.333) (.333) <.1578-5>
YD/DG ; ZD/DC ;PHI/DA ;THE/DB .0123 (0) (.333) (.333)[.899;.622]<.000529>

YD/YG ; ZD/DC ;PHI/DA ;THE/DB .0439 (0) (.0134) (.333) (.333) (.353) <.2118-8>
YD/YG ; ZD/DC ;PHI/DA ;PSI/DP .168 (.333)[.319;.0810]X[.290;.998]<.000165>
YD/WG ; ZD/DC ;PHI/DA ;THE/DB .00875 (0) (-.0640) (.333) (.333) (.570) <-.3558-8>

YD/DG ; ZD/DC ;PHI/DA ;THE/DB ;PSI/DP -.0105 (.0310) (.333) (.333) <-.3618-8>
YD/YG ; ZD/DC ;PHI/DA ;THE/DB ;PSI/DP -.0286 (.0114) (.333) (.333) <-.3618-8>
YD/WG ; ZD/DC ;PHI/DA ;THE/DB ;PSI/DP -.00519 (.0402) (.333) (.333) <-.2128-8>

TABLE V-5 CONTINUED
UH-1H TRANSFER FUNCTION FACTORS

CASE 125 40 KT BAR OFF

DENOMINATOR: (0) (.0861) (1.29)[-.103;.325][.746;.788][.309;1.41]<.0145>

CONTROL NUMERATORS:

PHI/DA .563 (0)[-.243;.365][.939;.733][.384;1.45]<.0844>
THE/DB -.173 (0) (.00216) (.0862) (.785) (1.18)[.307;1.41]<-.591E-4>
PSI/DP -1.17 (1.30)[-.0942;.289][-.0649;.394][.778;.773]<-.0118>

PHI/DB .0256 (0) (.0535) (-.0733) (1.71) (5.12)[.302;1.43]<-.00181>
THE/DA .122 (0) (.0123) (.0808) (.785)[.324;1.51]<.000218>

PHI/DA ;THE/DB -.0972 (0) (.00202) (.785)[.390;1.43]<-.000318>
PHI/DA ;PSI/DP -.687 (.0486)[-.217;.355][.918;.738]<-.00229>
THE/DB ;PSI/DP .204 (.00217) (.777) (1.18)[-.0432;.347]<.488E-4>

PHI/DB ;PSI/DP -.0408 (.0465)[-.0927;.105][.967;2.46]<-.000127>
PHI/DP ;THE/DB -.0558 (0) (.00217) (.763) (-.947) (1.16)<.000101>
PHI/DC ;THE/DB -.00288 (0) (.00192) (4.65)[.901;2.25]<-.000130>

THE/DA ;PSI/DP -.151 (.0109) (.785)[.0645;.384]<-.000191>
THE/DP ;PHI/DA -.0199 (0) (.0109) (.795) (-1.28) (1.81)<.000398>
THE/DC ;PHI/DA .0120 (0) (.0178) (2.04)[.358;.945]<.000389>

PSI/DA ;THE/DB -.0136 (.00201) (.785) (1.71)[-.453;2.00]<-.000146>
PSI/DB ;PHI/DA .0163 (.0466) (.325) (-.621)[-.0316;1.98]<-.000602>
XD/DB ;PHI/DA .591 (0) (.768)[.388;1.43][.0407;2.33]<5.04>

YD/DA ;THE/DB -.151 (.00201) (.785)[.357;1.42][.00881;4.55]<-.000986>
ZD/DB ;PHI/DA .931 (0) (-.0600)[.199;1.44][.0975;1.35]<-.636>
XD/DC ;PHI/DA -.0270 (0) (1.87)[.343;.957][-.0713;3.91]<-.707>

YD/DP ;THE/DB -.274 (.00217) (.760) (1.16) (-1.23)[.175;2.26]<.00329>
ZD/DC ;PHI/DA -5.83 (0) (.531)[-.0766;.395][.357;1.44]<-.999>

PHI/DA ;THE/DB ;PSI/DP .119 (.00253) (.0485) (.782)<.115E-4>
PHI/DC ;THE/DB ;PSI/DP .0182 (.00308) (.0439) (1.71)<.421E-5>
THE/DC ;PHI/DA ;PSI/DP -.00945 (.0145) (.0545) (2.14)<-.159E-4>

PSI/DC ;PHI/DA ;THE/DB -.0256 (0) (.0630) (1.21)<-.00195>
XD/DB ;PHI/DA ;PSI/DP -.721 (.0885) (.764)[.0420;2.33]<-.145>
YD/DA ;THE/DB ;PSI/DP .200 (.00254) (.782)[-.00878;4.35]<.00755>

ZD/DC ;PHI/DA ;THE/DB .987 (0) (.00338)[.378;1.42]<.00676>
ZD/DC ;PHI/DA ;PSI/DP 7.12 (.0478) (.420)[.0216;.435]<.0271>
XD/DC ;PHI/DA ;THE/DB -.00792 (0) (2.58)[.217;1.00]<-.0206>

XD/DC ;PHI/DA ;PSI/DP .0366 (.0539) (1.82)[-.152;3.12]<.0351>
YD/DP ;PHI/DA ;THE/DB -.105 (.00253) (.790) (1.89) (-1.96)<.000774>
ZD/DB ;PHI/DA ;PSI/DP -1.14 (.0485) (-.0565)[.0974;2.36]<.0173>

ZD/DC ;PHI/DA ;THE/DB ;PSI/DP -1.22 (.00428) (.0489)<-.000256>
XD/DC ;PHI/DA ;THE/DB ;PSI/DP .00357 (.0521) (4.89)<.000835>

TABLE V-5 CONTINUED

UH-1H TRANSFER FUNCTION FACTORS

CASE 126 60 KT BAR OFF

DENOMINATOR: (0) (.9626) (1.47) [-.00588; .283] [.634; .916] [.131; 1.69] <.0222>
S R P SP D

CONTROL NUMERATORS:

PHI/DA .563 (0) [-.191; .348] [.875; .871] [.363; 1.94] <.196>
THE/DB -.174 (0) (.00612) (.0600) (1.00) (1.11) [.329; 1.89] <-.000252>
PSI/DP -1.43 (1.47) [-.0541; .270] [.0899; .341] [.670; .894] <-.0142>

PHI/DB .0442 (3) (.154) (-.168) [.290; 1.88] [.794; 2.94] <-.0343>
PHI/DP .408 (0) (-1.05) (1.45) [-.0325; .283] [.749; .942] <-.0440>
PHI/DC .134 (0) (.710) [-.275; .411] [.727; 2.38] <.0907>

THE/DA .117 (0) (.912) [.858; .0311] [.331; 1.97] <.0004400>
THE/DP -.0298 (0) (.00470) (.798) (1.44) (-2.09) [-.0408; .180] <.1022-4>
THE/DC .0149 (3) (.0269) (.0366) (1.97) (2.96) [.171; 1.94] <.0003230>

PSI/DA .0791 (.899) [-.117; .345] [.882; 1.32] [-.370; 2.02] <.0600>
PSI/DB .0596 (.155) (-.169) (1.39) [-.0734; 1.10] [.177; 2.02] <-.0107>
PSI/DC .210 (1.72) [-.368; .396] [.0330; .691] [.983; 1.02] <.0283>

YD/DP 1.03 (0) (.0614) (.983) (1.11) [.328; 1.88] [.0533; 2.36] <1.36>
YD/DA .875 [-.139; .350] [.860; .867] [.331; 1.90] [.0110; 4.57] <6.07>
ZD/DC -11.6 (0) (.0599) (.133) (1.36) [.172; .757] [.325; 1.89] <-.257>

XD/DC .0217 (0) (.0547) (1.98) (-7.62) [.164; 1.71] [.757; 1.31] <-.574>
YD/DP 1.95 (1.43) (-1.82) [-.0312; .282] [.791; .981] [.279; 1.92] <-1.44>
ZD/DB 2.75 (0) (.00223) (.0631) (1.19) [.332; 1.89] [.138; 2.44] <.00985>

PHI/DA ;THE/DB -.0978 (0) (.00468) (.924) [.367; 1.93] <-.00158>
PHI/DA ;PSI/DP -.838 (.0721) [-.127; .343] [.958; .979] <-.00550>
THE/DB ;PSI/DP .250 (.00606) (.954) (1.15) [.0244; .316] <.0001670>

PHI/DB ;PSI/DP -.0876 (.0737) (.144) (-.158) [.650; 2.40] <.0008860>
PHI/DP ;THE/DB -.0695 (0) (.00605) (.881) (-1.02) (1.37) <.0005760>
PHI/DC ;THE/DB -.0259 (0) (.00365) [.743; 2.37] <-.0005290>

THE/DA ;PSI/DP -.175 (.0183) (.911) [.0998; .313] <-.0002870>
THE/DP ;PHI/DA -.0179 (0) (.0181) (.956) (-1.35) (2.14) <.0008910>
THE/DC ;PHI/DA .00838 (0) (.0163) (3.48) [.322; 1.58] <.0011190>

PSI/DA ;THE/DB -.0139 (.00468) (.911) (1.99) [-.319; 2.03] <-.0004880>
PSI/DB ;PHI/DA .0301 (.0649) (.242) (-.248) [.101; 2.18] <-.0005570>
PSI/DC ;THE/DB -.0374 (.00365) [-.178; .683] [.994; 1.61] <-.0001650>

PSI/DC ;PHI/DA .118 (.0883) (1.03) (1.31) [-.211; .374] <.001970>
XD/DB ;PHI/DA .574 (0) (.9069) [.366; 1.93] [.0552; 2.37] <10.9>
XD/DB ;PSI/DP -1.47 (.925) (1.16) [.0337; .318] [.0548; 2.37] <-.887>

YD/DA ;THE/DB -.152 (.00468) (.925) [.330; 1.89] [.0108; 4.58] <-.0498>
YD/DA ;PSI/DP -1.41 [-.127; .344] [.853; .878] [-.0105; 4.18] <-2.41>
ZD/DC ;PHI/DA -6.50 (0) (.912) [.159; .499] [.351; 1.92] <-2.47>

ZD/DC ;THE/DB 1.96 (0) (.00655) (.0520) (1.18) [.324; 1.87] <.002770>
ZD/DC ;PSI/DP 16.6 (.193) (1.36) [.0304; .306] [.174; .748] <.2260>
XD/DC ;PHI/DA .0122 (0) (-6.84) [.322; 1.58] [.691; 1.44] <-2.36>

XD/DC ;THE/DP -.0190 (0) (.161) (1.12) (2.04) [.311; 1.38] <-.01330>
XD/DC ;PSI/DP .262 (1.94) [.0658; .319] [.431; 2.82] <.610>
YD/DP ;PHI/DA .739 (2.84) (-2.92) [-.127; .341] [.849; .881] <-.557>

YD/DP ;THE/DP -.336 (.00606) (.863) (1.46) (-1.82) [.304; 1.91] <.01690>
ZD/DB ;PHI/DA 1.55 (0) (.03492) [.378; 1.94] [.130; 2.42] <.1680>
ZD/DB ;PSI/DP -3.94 (.0104) (1.21) [-.00701; .312] [.135; 2.45] <-.02950>

PHI/DA ;THE/DB ;PSI/DP .147 (.00488) (.0720) (.920) <.4798-4>
PHI/DC ;THE/DB ;PSI/DP .0154 (.00348) (.0687) (3.17) <.1178-4>
THE/DC ;PHI/DA ;PSI/DP -.00872 (.0167) (.0747) (3.94) <-.4288-4>

TABLE V-5 CONTINUED
UH-1H TRANSFER FUNCTION FACTORS

CASE 126 60KT BAR OFF

CONTROL NUMERATORS CONCLUDED:

PSI/DC ;PHI/DA ;THE/DB -.0210 (.00394) (.0900) (1.70)<-.126E-4>

YD/DB ;PHI/DA ;PSI/DP -.860 (.0719) (.900)[.0562;2.37]<-.312>
YD/DA ;THE/DB ;PSI/DP .246 (.00489) (.521)[-.00683;4.34]<.0208>
ZD/DC ;PHI/DA ;THE/DB 1.11 (0) (.00468)[.360;1.92]<.0191>

ZD/DC ;THE/DB ;PSI/DP -2.85 (.00572) (1.20)[-.00520;.335]<-.00219>
ZD/DC ;PHI/DA ;PSI/DP 9.69 (.0719) (.352)[.178;.586]<.0730>
XD/DC ;PHI/DA ;THE/DB -.0107 (0) (2.02)[.367;1.48]<-.0477>

XD/DC ;PHI/DA ;PSI/DP -.0125 (.0748) (-8.08)[.589;3.31]<.0824>
YD/DC ;THE/DB ;PSI/DP .0186 (1.19) (2.07)[-.0784;.442]<.00900>
ZD/DP ;PHI/DA ;THE/DB -.128 (.00488) (.918) (2.85) (-2.93)<.00480>

ZD/DB ;PHI/DA ;PSI/DP -2.31 (.00577) (.0720)[.110;2.43]<-.00567>

ZD/DC ;PHI/DA ;THE/DB ;PSI/DP -1.67 (.00484) (.0724)<-.000585>
XD/DC ;PHI/DA ;THE/DB ;PSI/DP .0111 (.0752) (2.06)<.00172>

GUST NUMERATORS:

PHI/UG .00150 (0) (0) (0)[.514;1.60]X[.593;2.73]<.0286>
THE/UG -.00330 (0) (0) (.0632)[.996;.000]X[.345;1.91]<-.000689>
PSI/UG .00390 (0) (0) (1.39)[-.202;.933]X[.520;1.37]<.00889>

PHI/VG .0138 (0) (0) (.709)[-.0331;.293]X[.746;.907]<.000690>
THE/VG -.00125 (0) (0) (0) (-.0792) (-.348)[.939;.715]<-.174E-4>
PSI/VG -.0334 (0) (0) (1.39)[.00296;.285]X[.648;.901]<-.00327>

PHI/WG .00688 (0) (0) (.663)[-.309;.429]X[.355;2.58]<.00543>
THE/WG .00306 (0) (0) (.0213) (.0418) (1.97)[.248;1.87]<.189E-4>
PSI/WG .0151 (0) (.727) (1.34)[-.358;.418]X[-.0137;.812]<.00169>

PHI/PG 1.12 (0)[-.0466;.277]X[.776;1.03]X[.367;1.95]<.345>
THE/PG -.202 (0) (-.0480) (.925)[.340;.131]X[.353;1.91]<.000560>
PSI/PG .284 (1.23)[-.0449;.278]X[.704;1.18]X[-.244;1.68]<.107>

PHI/QG .773 (0) (.327) (1.29)[-.714;.535]X[.356;1.99]<.371>
THE/QG .523 (0) (.0176) (.0519) (.840) (1.59)[.320;1.90]<.00230>
PSI/QG .0368 (.320) (-.816) (1.54) (3.23) (-5.06)[-.432;.689]<.115>

PHI/RG -.290 (0) (1.62) (-1.71)[-.0584;.289]X[.767;1.02]<.0699>
THE/RG .00921 (0) (0) (1.15) (2.00) (-6.70)[-.711;.113]<-.00182>
PSI/RG 1.27 (1.46)[-.0979;.284]X[.0465;.424]X[.698;.907]<.0222>

XD/UG .0230 (0) (.0629) (.913) (1.06)[.363;1.93]X[.0570;2.09]<.0222>
ZD/UG .0459 (0) (0) (.0625) (1.08)[.324;1.92]X[.182;2.47]<.0697>
YD/VG .125 (0) (.667)[-.0353;.292]X[.758;.919]X[.298;1.92]<.0222>

XD/WG -.00827 (0) (0) (.0553) (2.11)[.229;1.76]X[.0999;3.55]<-.0376>
ZD/WG .877 (0) (.0626)[-.175;.346]X[.974;.975]X[.333;1.86]<.0222>

PHI/UG ;THE/DP -.000128 (0) (0) (.939)[.428;2.98]<-.00107>
PHI/UG ;PSI/DP -.00374 (0) (0) (.0696)[.636;1.57]<-.000728>
THE/UG ;PHI/DA -.00169 (0) (0) (.922)[.361;1.97]<-.00603>

THE/UG ;PSI/DP .00441 (0) (.972) (1.03)[.0175;.316]<.000442>
PSI/UG ;PHI/DA .00208 (0) (0) (.132)[.434;1.31]<.000365>
PSI/UG ;THE/DB -.000499 (0) (.943) (1.37)[-.148;.719]<-.000332>

PHI/VG ;THE/DB -.00233 (0) (0) (.00597)[.979;.750]<-.784E-5>
PHI/VG ;PSI/DP -.00609 (0)[-.0263;.283]X[.760;.954]<-.000443>
THE/VG ;PHI/DA -.000742 (0) (0) (.0196) (.840) (1.34)<-.125E-4>

THE/VG ;PSI/DP .000798 (0) (0) (.731)[-.156;.148]<.128E-4>
PSI/VG ;PHI/DA -.0199 (0)[-.140;.189]X[.872;.879]<-.00187>
PSI/VG ;THE/DB .00587 (0) (0) (.00451)[.995;1.04]<.287E-4>

TABLE V-5 CONTINUED

UH-1H TRANSFER FUNCTION FACTORS

CASE 12 60KT BAR OFF

GUST NUMERATORS CONTINUED:

PHI/WG ;THE/ B -.00133 (0) (0) (.00380)[.390; 2.53]<-.3248-4>
PHI/WG ;PSI/DP -.0160 (0) (.0678) (.641)[-.333; .432]<-.000130>
THE/WG ;PHI/DA .00172 (0) (0) (.0128)[.391; 1.75]<.674E-4>

THE/WG ;PSI/DP -.00397 (0) (.0157) (2.08)[.0570; .316]<-.130E-4>
PSI/WG ;PHI/DA .00795 (0) (.107) (.763)[-.246; .408]<.000104>
PSI/WG ;THE/DB -.00280 (0) (.00380) (1.43)[-.150; .814]<-.101E-4>

PHI/PG ;THE/DB -.186 (0) (.00454) (.984)[.365; 1.96]<-.00305>
PHI/PG ;PSI/DP -1.72 (.0715)[-.0458; .278][.772; 1.01]<-.00979>
THE/PG ;PHI/DA -.117 (0) (.00333) (.903)[.364; 1.94]<-.00133>

THE/PG ;PSI/DP .298 (-.132) (.193) (.932)[-.0136; .241]<-.0004123>
PSI/PG ;PHI/DA .0712 (.0151) (-.126) (.201)[.128; 1.71]<-.856E-4>
PSI/PG ;THE/DB -.0373 (.00453) (.936) (1.93)[-.276; 1.75]<-.0009403>

PHI/QG ;THE/DB -.157 (0) (.00136) (.787)[.382; 1.97]<-.0006513>
PHI/QG ;PSI/DP -1.12 (.0725) (.340) (1.27)[-.676; .540]<-.01023>
THE/QG ;PHI/DA .292 (0) (.0141) (.876)[.365; 1.93]<.01332>

THE/QG ;PSI/DP -.748 (.0154) (.837) (1.59)[.0415; .317]<-.001533>
PSI/QG ;PHI/DA -.0404 (.0603) (.218) (-.219)[.181; 3.27]<.001253>
PSI/QG ;THE/DB -.0376 (.00133) (.752) (1.70)[-.395; 1.75]<-.0001963>

PHI/RG ;THE/DB .0499 (0) (.00596) (1.18) (1.38) (-1.64)<-.0007933>
PHI/RG ;PSI/DP -.103 (.0732)[-.0928; .296][.862; 1.15]<-.0008803>
THE/RG ;PHI/DA .00597 (0) (.0197) (.803) (-3.36) (3.99)<-.001263>

THE/RG ;PSI/DP .0246 (.0112) (-.381) (1.27)[.126; .287]<-.1092-4>
PSI/RG ;PHI/DA .737 (.0711)[-.122; .340][.853; .894]<.004853>
PSI/RG ;THE/DB -.221 (.00597)[-.0491; .400][.999; 1.09]<-.0002523>

XD/UG ;PHI/DA .0110 (0) (.895)[.381; 2.96][.0552; 2.08]<.1943>
XD/UG ;THE/DB -.000920 (0) (.0806) (.990) (1.11)[.328; 1.76]<-.0002553>
XD/UG ;PSI/DP -.0827 (.862) (1.12)[.0274; .317][.0818; 2.12]<-.01423>

ZD/UG ;PHI/DA .0259 (0) (0)[.343; 2.01][.172; 2.42]<.6113>
ZD/UG ;THE/DB .000285 (0) (0) (.445) (-3.91)[.447; 1.13]<-.0004843>
ZD/UG ;PSI/DP -.0655 (0) (1.12)[-.0149; .312][.141; 2.51]<-.04483>

YD/VG ;PHI/DA .0584 (0) (.899)[-.116; .337][.824; .903]<.004853>
YD/VG ;THE/DB -.0216 (0) (.00597)[.981; .733][.314; 1.90]<-.0002523>
YD/VG ;PSI/DP -.114 [-.0249; .282][.823; .955][.357; 1.31]<-.01423>

XD/WG ;PHI/DA -.00454 (0) (0)[.373; 1.71][.0286; 3.57]<-.1693>
XD/WG ;THE/DB -.00173 (0) (0) (.177) (1.12)[.320; 1.46]<-.0007313>
XD/WG ;PSI/DP .0127 (0) (2.26)[.0644; .318][.0986; 3.00]<.03263>

ZD/WG ;PHI/DA .493 (0) (.733)[-.249; .380][.374; 1.93]<.1943>
ZD/WG ;THE/DB -.161 (0) (.00612) (.0597) (1.20)[.336; 1.89]<-.0002523>
ZD/WG ;PSI/DP -1.25 [-.0905; .313][-.0771; .350][.982; .971]<-.01423>

XD/UG ; ZD/DC -.267 (0) (.0576) (1.08)[.356; 1.87][.0622; 2.10]<-.2573>
YD/VG ; ZD/DC -1.44 (0) (.141) (.673)[.230; .712][.299; 1.93]<-.2573>

PHI/UG ;THE/DB ;PSI/DP .000385 (0) (.0726) (.942)<.2613-4>
THE/UG ;PHI/DA ;PSI/DP .00256 (0) (.0720) (.918)<.0001713>
PSI/UG ;PHI/DA ;THE/DB -.000271 (0) (.0684) (.934)<-.1713-4>

PHI/VG ;THE/DB ;PSI/DP .00102 (0) (.00605) (.846)<.5192-5>
THE/VG ;PHI/DA ;PSI/DP .000473 (0) (.0191) (1.04)<.8933-5>
PSI/VG ;PHI/DA ;THE/DB .00349 (0) (.00468) (.930)<.1523-4>

PHI/WG ;THE/DB ;PSI/DP .00304 (0) (.00371) (.0670)<.7547-6>
THE/WG ;PHI/DA ;PSI/DP -.00230 (0) (.0137) (.3756)<-.2393-5>
PSI/WG ;PHI/DA ;THE/DB -.00147 (0) (.00396) (.112)<-.6523-6>

TABLE V-5 CONTINUED
UH-1H TRANSFER FUNCTION FACTORS

CASE 126 60KT BAR OFF

GUST NUMERATORS CONCLUDED:

PHI/PG ;THE/DP ;PSI/DP .283 (.00474) (.0716) (.939)<.902E-4>
THE/PG ;PHI/DA ;PSI/DP .176 (.00335) (.0716) (.897)<.379E-4>
PSI/PG ;PHI/DA ;THE/DB -.00615 (.00317) (.120) (1.35)<-.315E-5>

PHI/QG ;THE/DB ;PSI/DP .242 (.00207) (.0721) (.795)<.287E-4>
THE/QG ;PHI/DA ;PSI/DP -.437 (.0141) (.0719) (.868)<-.000386>
PSI/QG ;PHI/DA ;THE/DB -.00859 (.0374) (.106) (-.832)<.283E-4>

PHI/RG ;THE/DB ;PSI/DP .0165 (.00587) (.0732) (1.36)<.966E-5>
THE/RG ;PHI/DA ;PSI/DP .0145 (.0231) (.0745) (.541)<.135E-4>
PSI/RG ;PHI/DA ;THE/DB -.128 (.00500) (.0710) (.946)<-.432E-4>

XD/UG ;PHI/DA ;THE/DB -.000519 (0) (.927)[.372;1.81]<-.00158>
XD/WG ;PHI/DA ;PSI/DP -.0192 (.0720) (.887)[.0774;2.14]<-.00550>
XD/UG ;THE/DB ;PSI/DP .00121 (.951) (1.16)[-.00398;.353]<.000167>

ZD/UG ;PHI/DA ;THE/DB .000164 (0) (0)[-.694;1.24]<.000251>
ZD/UG ;PHI/DA ;PSI/DP -.0384 (0) (.0720)[.127;2.50]<-.0173>
ZD/UG ;THE/DB ;PSI/DP -.000675 (0) (.867)[-.363;.810]<-.000393>

YD/VG ;PHI/DA ;THE/DB -.0101 (0) (.00500)[.983;.923]<-.432E-4>
YD/VG ;PHI/DA ;PSI/DP -.0609 [-.123;.341][.850;.881]<-.00550>
YD/VG ;THE/DB ;PSI/DP .0198 (.00606) (.826)[.426;1.30]<.000167>

XD/WG ;PHI/DA ;THE/DB -.000975 (0) (0)[.392;1.57]<-.00240>
XD/WG ;PHI/DA ;PSI/DP .00714 (0) (.0759)[.00573;3.22]<.00563>
XD/WG ;THE/DB ;PSI/DP .00183 (0) (1.19)[-.0781;.477]<.000496>

ZD/WG ;PHI/DA ;THE/DB -.0905 (0) (.00468)[.375;1.93]<-.00158>
ZD/WG ;PHI/DA ;PSI/DP -.735 (.0720) (.726)[-.247;.378]<-.00550>
ZD/WG ;THE/DB ;PSI/DP .230 (.00606) (1.22)[.0102;.314]<.000167>

XD/UG ; ZD/DC ;PHI/DA -.151 (0)[.373;1.93][.0600;2.09]<-2.47>
XD/UG ; ZD/DC ;THE/DB .0104 (0) (.0746) (1.17)[.324;1.75]<.00277>
XD/UG ; ZD/DC ;PSI/DP .379 (1.12)[-.0166;.343][.0808;2.13]<.226>

YD/VG ; ZD/DC ;PHI/DA -.671 (0) (.275) (.901)[.199;.600]<-.0599>
YD/VG ; ZD/DC ;THE/DB .244 (0) (.00632) (.491)[.311;1.91]<.00277>
YD/VG ; ZD/DC ;PSI/DP 1.32 (.216)[.423;.701][.327;1.27]<.226>

XD/UG ;PHI/DA ;THE/DB ;PSI/DP .000718 (.0718) (.924)<.474E-4>
ZD/UG ;PHI/DA ;THE/DB ;PSI/DP -.000393 (0) (.0694)<-.273E-4>
YD/VG ;PHI/DA ;THE/DB ;PSI/DP .0106 (.00488) (.914)<.474E-4>

XD/WG ;PHI/DA ;THE/DB ;PSI/DP .00111 (0) (.0781)<.871E-4>
ZD/WG ;PHI/DA ;THE/DB ;PSI/DP .135 (.00488) (.0720)<.474E-4>
XD/UG ; ZD/DC ;PHI/DA ;THE/DB .00585 (0)[.366;1.81]<.0191>

YD/VG ; ZD/DC ;PHI/DA ;THE/DB .114 (0) (.00504) (.867)<.000501>
YD/VG ; ZD/DC ;PHI/DA ;PSI/DP .703 (.339)[.187;.554]<.0730>
XD/WG ; ZD/DC ;PHI/DA ;THE/DB .0210 (0)[.394;1.51]<.0477>

XD/UG ; ZD/DC ;PHI/DA ;THE/DB ;PSI/DP -.00810 (.0722)<-.000585>
YD/VG ; ZD/DC ;PHI/DA ;THE/DB ;PSI/DP -.121 (.00484)<-.000585>
XD/WG ; ZD/DC ;PHI/DA ;THE/DB ;PSI/DP -.0229 (.0751)<-.00172>

MICROFILMED FROM
BEST AVAILABLE COPY

TABLE V-5 CONTINUED

UH-1H TRANSFER FUNCTION FACTORS

CASE 126 60KT BAR ON

DENOMINATOR: (0) (.0105) (.810)[.202;.177][.462;1.07][.466;1.88][.242;2.04]<.00453>

CONTROL NUMERATORS:

PHI/DA .563 (0) (.333) (.793)[.205;.179][.409;1.10][.362;1.94]<.0216>
THE/DB -.174 (0) (.00618) (.00991) (.333) (.921)[.496;1.86][.238;2.03]<-.464E-4>
PSI/DP -1.43 (.800)[.492;.0949][.232;.181][.442;1.08][.357;2.01]<-.00158>

PHI/DB .0442 (0) (.155) (-.163) (.333) (.337)[.292;1.88][.798;2.92]<-.00379>
PHI/DP .408 (0) (.395) (.647) (-.955) (1.30)[.184;.159][.422;1.20]<-.00470>
PHI/DC .134 (0) (.340)[.240;.199][.375;1.01][.714;2.34]<.0100>

THE/DA .117 (0) (.0140) (.103) (.268) (.333) (.912)[.334;1.97]<.536E-4>
THE/DP -.0298 (0) (.00581) (.0161) (.379) (.952) (-1.51) (1.62)[-.172;1.90]<.895E-5>
THE/DC .0149 (0) (.0132) (.0217) (.327) (3.15)[.619;1.46][.210;2.37]<.528E-4>

PSI/DA .0791 (.333) (.918) (1.38)[.207;.178][.865;1.23][-.374;2.04]<.00666>
PSI/DB .0596 (.178) (-.181) (.333)[.763;.322][.00646;1.90][.393;2.23]<-.00119>
PSI/DC .210 (1.54)[.212;.209][.501;.246][.478;.996][.344;1.93]<.00314>

XD/DB 1.03 (0) (.0114) (.333) (.903)[.494;1.86][.243;2.03][.0502;2.36]<.278>
YD/DA .875 (.333) (.784)[.207;.179][.393;1.10][.331;1.90][.0110;4.57]<.675>
ZD/DC -11.6 (0) (.00980)[.486;.166][.399;1.13][.444;1.84][.248;2.02]<-.0553>

XD/DC .0217 (0) (.0198) (.359) (-7.26)[.635;1.49][.178;2.05][.731;3.36]<-.118>
YD/DP 1.95 (.107) (.763) (1.92) (-2.01)[.232;.167][.425;1.14][.197;2.69]<-.160>
ZD/DB 2.75 (0) (.00304) (.0131) (.333)[.502;1.85][.228;2.03][.149;2.45]<.00307>

PHI/DA ;THE/DB -.0978 (0) (.00468) (.333) (.333) (.924)[.367;1.93]<-.000176>
PHI/DA ;PSI/DP -.838 (.0720) (.333) (.782)[.206;.177][.403;1.12]<-.000611>
THE/DB ;PSI/DP .250 (.00610) (.333) (.919)[.500;.101][.366;1.96]<.185E-4>

PHI/DB ;PSI/DP -.0876 (.0737) (.144) (-.158) (.333) (.335)[.650;2.40]<.940E-4>
PHI/DP ;THE/DB -.0695 (0) (.00610) (.333) (.394) (.858) (-.933) (1.25)<.556E-4>
PHI/DC ;THE/DB -.0259 (0) (.00364) (.333) (.340)[.732;2.33]<-.582E-4>

THE/DA ;PSI/DP -.175 (.0183) (.333) (.333) (.911)[.0998;.313]<-.318E-4>
THE/DP ;PHI/DA -.0179 (0) (.0184) (.333) (.378) (.967) (-1.24) (1.97)<.981E-4>
THE/DC ;PHI/DA .00838 (0) (.0162) (.327) (.333) (3.46)[.327;1.61]<.000133>

PSI/DA ;THE/DB -.0139 (.00468) (.333) (.333) (.911) (1.99)[-.319;2.03]<-.582E-4>
PSI/DB ;PHI/DA .0301 (.0648) (.242) (-.248) (.333) (.333)[.101;2.18]<-.619E-4>
PSI/DC ;THE/DB -.0374 (.00365) (.333) (1.68)[.527;.264][.358;1.86]<-.183E-4>

PSI/DC ;PHI/DA .118 (.0886) (.333) (1.53)[.218;.193][.429;1.05]<.000219>
XD/DB ;PHI/DA .578 (0) (.333) (.333) (.906)[.366;1.93][.0552;2.37]<1.21>
YD/DB ;PSI/DP -1.47 (.333) (.899)[.506;.102][.367;1.96][.0536;2.37]<-.0985>

YD/DA ;THE/DB -.152 (.00468) (.333) (.333) (.925)[.330;1.89][.0108;4.58]<-.00549>
YD/DA ;PSI/DP -1.41 (.333) (.778)[.206;.177][.400;1.12][-.0106;4.34]<-.268>
ZD/DC ;PHI/DA -6.50 (0) (.333)[.469;.168][.344;1.10][.348;1.92]<-.274>

ZD/DC ;THE/DB 1.96 (0) (.00722) (.00806) (.333)[.490;1.86][.237;2.01]<.000531>
ZD/DC ;PSI/DP 16.6 [.629;.101][.434;.174][.358;1.12][.357;1.98]<.0251>
XD/DC ;PHI/DA .0122 (0) (.333) (.358) (-6.47)[.320;1.58][.650;3.35]<-.262>

XD/DC ;THE/DB -.0190 (0) (.0187) (.333) (2.03)[.467;1.69][.258;1.72]<-.00203>
XD/DC ;PSI/DP .254 (.367)[.458;.133][.696;1.99][.262;2.63]<.0455>
YD/DP ;PHI/DA .739 (.333) (.775) (2.84) (-2.92)[.205;.176][.403;1.12]<-.0618>

YD/DP ;THE/DB -.336 (.00610) (.109) (.333) (.908) (1.94) (-2.02)[.199;2.66]<.00188>
ZD/DB ;PHI/DA 1.55 (0) (.00492) (.333) (.333)[.374;1.94][.130;2.42]<.0187>
ZD/DB ;PSI/DP -3.94 (.0109) (.333)[.479;.100][.360;1.94][.143;2.45]<-.00328>

PHI/DA ;THE/DB ;PSI/DP .147 (.00488) (.0720) (.333) (.333) (.920)<.526E-5>
PHI/DC ;THE/DB ;PSI/DP .0154 (.00348) (.0687) (.333) (.333) (3.17)<.130E-5>
THE/DC ;PHI/DA ;PSI/DP -.00872 (.0167) (.0747) (.333) (.333) (3.94)<-.476E-5>

TABLE V-5 CONTINUED
UH-1H TRANSFER FUNCTION FACTORS

CASE 126 60KT BAR ON

CONTROL NUMERATORS CONCLUDED:

```
PSI/DC ;PHI/DA ;THE/DB  -.0210 (.00394) (.0900) (.333) (.333) (1.70)<-.140E-5>

YD/DR ;PHI/DA ;PSI/DP  -.860 (.0719) (.333) (.333) (.900)[ .0562; 2.37 ]<-.0347>
YD/DA ;THE/DB ;PSI/DP   .246 (.00489) (.333) (.333) (.921)[ -.00683; 4.34 ]<.00232>
ZD/DC ;PHI/DA ;THE/DB   1.11 (0) (.00468) (.333) (.333)[ .360; 1.92 ]<.00212>

ZD/DC ;THE/DB ;PSI/DP  -2.85 (.00575) (.333)[ .487; .108 ][ .364; 1.36 ]<-.000248>
ZD/DC ;PHI/DA ;PSI/DP   9.69 (.0720) (.333)[ .505; .167 ][ .317; 1.12 ]<.00811>
YD/DC ;PHI/DA ;THE/DB  -.0107 (0) (.333) (.333) (2.02)[ .367; 1.48 ]<-.00530>

YD/DC ;PHI/DA ;PSI/DP  -.0145 (.0728) (.333) (.367) (-7.66)[ .532; 1.24 ]<.00916>
YD/DC ;THE/DB ;PSI/DP   .0186 (.333) (2.06)[ .467; .143 ][ .341; 1.96 ]<.00160>
YD/DP ;PHI/DA ;THE/DB  -.128 (.00488) (.333) (.333) (.918) (2.85) (-2.93)<.000533>

ZD/DB ;PHI/DA ;PSI/DP  -2.31 (.00577) (.0720) (.333) (.333)[ .130; 2.43 ]<-.000630>

ZD/DC ;PHI/DA ;THE/DB ;PSI/DP  -1.67 (.00484) (.0724) (.333) (.333)<-.650E-4>
YD/DC ;PHI/DA ;THE/DB ;PSI/DP   .0111 (.0752) (.333) (.333) (2.06)<.000191>
```

GUST NUMERATORS:

```
PHI/UG   .00150 (0) (0) (0) (.342) (.458)[ .421; 1.67 ][ .609; 2.74 ]<.00498>
THE/UG  -.00300 (0) (0) (.0105) (.334) (.920)[ .476; 1.93 ][ .237; 1.98 ]<-.000141>
PSI/UG   .00390 (0) (0) (.555)[ .648; .296 ][ .212; 1.48 ][ .400; 1.93 ]<.00154>

PHI/VG   .0138 (0) (0) (.684)[ .185; .161 ][ .771; .638 ][ .813; 1.19 ]<.000141>
THE/VG  -.00125 (0) (0) (0) (.0136) (1.05)[ .830; .660 ][ -.140; 2.02 ]<-.318E-4>
PSI/VG  -.0334 (0) (0) (.816)[ .198; .177 ][ .452; 1.08 ][ .362; 2.02 ]<-.00406>

PHI/WG   .00688 (0) (0) (.338)[ .254; .203 ][ .330; .994 ][ .353; 2.51 ]<.000600>
THE/WG   .00308 (0) (0) (.329)[ .995; .0154 ][ .675; 1.65 ][ .240; 2.18 ]<.307E-5>
PSI/WG   .0151 (0)[ .247; .205 ][ .604; .308 ][ .420; .929 ][ .305; 1.90 ]<.000188>

PHI/PG   1.12 (0) (.334) (.712)[ .171; .159 ][ .460; 1.23 ][ .368; 1.98 ]<.0383>
THE/PG  -.202 (0) (-.00673) (.0120) (.334) (.906)[ .385; 1.89 ][ .0739; 1.90 ]<.642E-4>
PSI/PG   .284 (.357)[ .156; .163 ][ .809; .736 ][ .584; 1.51 ][ -.173; 1.88 ]<.0118>

PHI/QG   .773 (0) (.332) (1.04)[ .446; .269 ][ -.0388; .734 ][ .349; 1.99 ]<.0412>
THE/QG   .523 (0) (.0132) (.0143) (.334) (.880)[ .551; 1.86 ][ .268; 2.04 ]<.000415>
PSI/QG   .0369 (.294) (.596) (-.806) (3.95) (-5.45)[ .378; .216 ][ .172; 1.56 ]<.0128>

PHI/RG  -.290 (0) (.363) (.808) (1.45) (-1.62)[ .183; .162 ][ .437; 1.20 ]<.00760>
THE/RG   .00921 (0) (.00511) (.0167) (.370) (.812) (2.49) (-6.21)[ -.156; 1.69 ]<-.105E-4>
PSI/RG   1.27 (.810)[ .405; .124 ][ .264; .181 ][ .439; 1.09 ][ .355; 2.00 ]<.00246>

XD/UG   .0230 (0) (.0105) (.321) (.896)[ .481; 1.92 ][ .243; 1.97 ][ .0686; 2.13 ]<.00453>
ZD/UG   .0459 (0) (0) (.0105) (.335)[ .481; 1.94 ][ .208; 1.94 ][ .188; 2.50 ]<.0143>
YD/VG   .125 (0) (.342)[ .205; .161 ][ .950; .685 ][ .419; 1.15 ][ .230; 2.56 ]<.00454>

XD/WG  -.00827 (0) (0) (.0184) (.354)[ .682; 1.71 ][ .205; 2.09 ][ .117; 3.37 ]<-.00774>
ZD/WG   .877 (0) (.0105)[ .221; .186 ][ .407; .973 ][ .496; 1.88 ][ .246; 2.06 ]<.00453>

PHI/UG ;THE/DB  -.000128 (0) (0) (.133) (.341) (.940)[ .433; 2.93 ]<-.000118>
PHI/UG ;PSI/DP  -.00374 (0) (0) (.0708) (.333) (.455)[ .569; 1.76 ]<-.000125>
THE/UG ;PHI/DA  -.00169 (0) (0) (.333) (.334) (.922)[ .364; 1.96 ]<-.000670>

THE/UG ;PSI/DP   .00441 (0) (.333) (.917)[ .515; .0977 ][ .341; 1.96 ]<.491E-4>
PSI/UG ;PHI/DA   .00208 (0) (0) (.0827) (.333) (.533)[ .319; 1.51 ]<.693E-4>
PSI/UG ;THE/DB  -.000499 (0) (.333) (.933)[ .510; .263 ][ .331; 1.86 ]<-.369E-4>

PHI/VG ;THE/DB  -.00233 (0) (0) (.00537) (.333) (.832)[ .752; .645 ]<-.145E-5>
PHI/VG ;PSI/DP  -.00609 (0) (.333) (.660)[ .187; .159 ][ .435; 1.21 ]<-.492E-4>
THE/VG ;PHI/DA  -.000742 (0) (0) (.0125) (.333) (1.19)[ .839; .672 ]<-.167E-5>

THE/VG ;PSI/DP   .000798 (0) (0) (.0196) (.333) (.989)[ .00243; 1.93 ]<.191E-4>
PSI/VG ;PHI/DA  -.0199 (0) (.333) (.799)[ .207; .179 ][ .405; 1.11 ]<-.000209>
PSI/VG ;THE/DB   .00587 (0) (0) (.00466) (.333) (.926)[ .372; 1.98 ]<.333E-4>
```

TABLE V-5 CONTINUED

UH-1H TRANSFER FUNCTION FACTORS

CASE 126 60KT BAR ON

GUST NUMERATORS CONTINUED:

```
PHI/WG ;THE/DB  -.00133 (0) (0) (.00379) (.333) (.338)[ .393;2.51 ]<-.357E-5>
PHI/WG ;PSI/DP  -.0160  (0) (.0677) (.333)[ .253;.204 ][ .297;.980 ]<-.145E-4>
THE/WG ;PHI/DA   .00172 (0) (0) (.0128) (.329) (.333)[ .389;1.76 ]<.751E-5>

THE/WG ;PSI/DP  -.00397 (0) (.0158) (.333)[ .455;.131 ][ .579;2.01 ]<-.144E-5>
PSI/WG ;PHI/DA   .00795 (0) (.108) (.333)[ .250;.201 ][ .399;.999 ]<.115E-4>
PSI/WG ;THE/DB  -.00280 (0) (.00380) (.333)[ .635;.310 ][ .310;1.81 ]<-.112E-5>

PHI/PG ;THE/DB  -.186  (0) (.00454) (.333) (.334) (.943)[ .365;1.95 ]<-.000339>
PHI/PG ;PSI/DP  -1.72  (.0715) (.333) (.708)[ .172;.159 ][ .456;1.22 ]<-.00109>
THE/PG ;PHI/DA  -.117  (0) (.00333) (.333) (.334) (.903)[ .364;1.94 ]<-.000147>

THE/PG ;PSI/DP   .298  (-.0349) (.333) (.902)[ .880;.0646 ][ .0875;1.88 ]<-.458E-4>
PSI/PG ;PHI/DA   .0712 (.0149) (-.0964) (.168) (.333) (.483)[ .271;1.80 ]<-.895E-5>
PSI/PG ;THE/DB  -.0373 (.00453) (.333) (.359) (.814) (1.80)[ -.198;1.88 ]<-.000104>

PHI/QG ;THE/DB  -.157  (0) (.00138) (.332) (.333) (.791)[ .381;1.96 ]<-.735E-4>
PHI/QG ;PSI/DP  -1.12  (.0724) (.333) (1.01)[ .416;.253 ][ -.00707;.804 ]<-.00114>
THE/QG ;PHI/DA   .292  (0) (.0141) (.333) (.334) (.875)[ .365;1.93 ]<.00149>

THE/QG ;PSI/DP  -.748  (.0154) (.333) (.873)[ .473;.114 ][ .457;1.97 ]<-.000170>
PSI/QG ;PHI/DA  -.0404 (.0599) (.187) (-.204) (.333) (.471)[ .172;3.09 ]<.000139>
PSI/QG ;THE/DB  -.0376 (.00134) (.299) (.333)[ .843;1.24 ][ -.290;1.69 ]<-.218E-4>

PHI/RG ;THE/DB   .0499 (0) (.00598) (.333) (.363) (-1.56)[ .990;1.24 ]<-.865E-4>
PHI/RG ;PSI/DP  -.103  (.0732) (.333) (1.02)[ .182;.166 ][ .506;1.17 ]<-.977E-4>
THE/RG ;PHI/DA   .00597 (0) (.0199) (.333) (.370) (.779) (-3.20) (3.82)<-.000140>

THE/RG ;PSI/DP   .0246 (.0124) (-.0483) (.135) (.333) (.607)[ .171;1.74 ]<-.121E-5>
PSI/RG ;PHI/DA   .737  (.0711) (.333) (.795)[ .205;.176 ][ .405;1.12 ]<.000539>
PSI/RG ;THE/DB  -.221  (.00599) (.333) (.940)[ .450;.133 ][ .364;1.95 ]<-.279E-4>

 XD/UG ;PHI/DA   .0130 (0) (.321) (.333) (.896)[ .376;1.96 ][ .0622;2.13 ]<.0216>
 XD/UG ;THE/DB  -.000920 (0) (.0130) (.333) (.925)[ .503;1.81 ][ .232;1.96 ]<-.464E-4>
 XD/UG ;PSI/DP  -.0327 (.319) (.890)[ .521;.0976 ][ .336;1.96 ][ .0887;2.16 ]<-.00158>

 ZD/UG ;PHI/DA   .0259 (0) (0) (.333) (.335)[ .353;2.00 ][ .164;2.42 ]<.0678>
 ZD/UG ;THE/DB   .000285 (0) (0) (.333) (-2.63)[ -.415;.219 ][ .388;2.05 ]<-.505E-4>
 ZD/UG ;PSI/DP  -.0655 (0) (.336)[ .501;.0980 ][ .328;1.95 ][ .155;2.49 ]<-.00498>

 YD/VG ;PHI/DA   .0584 (0) (.333)[ .211;.172 ][ .980;.850 ][ .402;1.13 ]<.000529>
 YD/VG ;THE/DB  -.0216 (0) (.00537) (.333) (.358)[ .990;.721 ][ .233;2.54 ]<-.464E-4>
 YD/VG ;PSI/DP  -.114  (.0992) (.750)[ .228;.167 ][ .430;1.13 ][ .277;2.28 ]<-.00158>

 XD/WG ;PHI/DA  -.00454 (0) (0) (.333) (.354)[ .371;1.73 ][ .0249;3.42 ]<-.0189>
 XD/WG ;THE/DB  -.00173 (0) (0) (.0199) (.333)[ .516;1.69 ][ .220;1.83 ]<-.000109>
 XD/WG ;PSI/DP   .0127 (0) (.360)[ .461;.131 ][ .599;2.22 ][ .0813;2.76 ]<.00296>

 ZD/WG ;PHI/DA   .493  (0) (.333)[ .224;.188 ][ .396;.999 ][ .374;1.93 ]<.0216>
 ZD/WG ;THE/DB  -.161  (0) (.00618) (.00990) (.333)[ .503;1.86 ][ .244;2.03 ]<-.464E-4>
 ZD/WG ;PSI/DP  -1.25 [ .496;.0960 ][ .239;.189 ][ .402;.972 ][ .371;2.02 ]<-.00158>

 XD/UG ; ZD/DC  -.267  (0) (.0101) (.322)[ .478;1.91 ][ .238;1.96 ][ .0735;2.14 ]<-.0553>
 YD/VG ; ZD/DC  -1.44  (0)[ .728;.144 ][ .929;.461 ][ .311;1.15 ][ .229;2.57 ]<-.0554>

PHI/UG ;THE/DB ;PSI/DP   .000385 (0) (.0726) (.333) (.333) (.942)<.292E-5>
THE/UG ;PHI/DA ;PSI/DP   .00258  (0) (.0720) (.333) (.333) (.913)<.190E-4>
PSI/UG ;PHI/DA ;THE/DB  -.000271 (0) (.0684) (.333) (.333) (.934)<-.192E-5>

PHI/VG ;THE/DB ;PSI/DP   .00102  (0) (.00665) (.333) (.333) (.846)<.577E-6>
THE/VG ;PHI/DA ;PSI/DP   .000473 (0) (.0141) (.333) (.333) (1.04)<.992E-6>
PSI/VG ;PHI/DA ;THE/DB   .00189  (0) (.00468) (.333) (.333) (.930)<.169E-5>

PHI/WG ;THE/DB ;PSI/DP   .00308  (0) (.00371) (.0670) (.333) (.333)<.840E-7>
THE/WG ;PHI/DA ;PSI/DP  -.00230  (0) (.0137) (.0756) (.333) (.333)<-.265E-6>
PSI/WG ;PHI/DA ;THE/DB  -.00147  (0) (.00396) (.112) (.333) (.333)<-.725E-7>
```

TABLE V-5 CONTINUED
UH-1H TRANSFER FUNCTION FACTORS

CASE 126 60KT BAR ON

GUST NUMERATORS CONCLUDED:

```
PHI/PG ;THE/DB ;PSI/DP    .283 (.00474) (.0716) (.333) (.333) (.933)<.100E-4>
THE/PG ;PHI/DA ;PSI/DP    .176 (.00335) (.0716) (.333) (.333) (.697)<.421E-5>
PSI/PG ;PHI/DA ;THE/DB  -.00615 (.00317) (.120) (.333) (.333) (1.35)<-.350E-6>

PHI/QG ;THE/DB ;PSI/DP    .242 (.00207) (.0721) (.333) (.333) (.795)<.319E-5>
THE/QG ;PHI/DA ;PSI/DP  -.437 (.0141) (.0719) (.333) (.333) (.868)<-.426E-4>
PSI/QG ;PHI/DA ;THE/DB  -.00859 (.0374) (.106) (.333) (.333) (-.832)<.315E-5>

PHI/RG ;THE/DB ;PSI/DP    .0165 (.00587) (.0732) (.333) (.333) (1.36)<.107E-5>
THE/RG ;PHI/DA ;PSI/DP    .0145 (.0231) (.0745) (.333) (.333) (.541)<.150E-5>
PSI/RG ;PHI/DA ;THE/DB  -.128 (.00500) (.0710) (.333) (.333) (.946)<-.480E-5>

 XD/UG ;PHI/DA ;THE/DB  -.000519 (0) (.333) (.333) (.927)[.372;1.81]<-.000176>
 XD/UG ;PHI/DA ;PSI/DP  -.0192 (.0720) (.319) (.333) (.889)[.0786;2.16]<-.000611>
 XD/UG ;THE/DB ;PSI/DP   .00121 (.333) (.923)[.483;.114][.359;1.96]<.185E-4>

 ZD/UG ;PHI/DA ;THE/DB   .000164 (0) (0) (.333) (.333)[-.694;1.24]<.279E-4>
 ZD/UG ;PHI/DA ;PSI/DP  -.0384 (0) (.0720) (.333) (.336)[.127;2.49]<-.00192>
 ZD/UG ;THE/DB ;PSI/DP  -.000675 (0) (.333)[.510;.234][.104;1.88]<-.436E-4>

 YD/VG ;PHI/DA ;THE/DB  -.0101 (0) (.00500) (.333) (.333)[.983;.923]<-.480E-5>
 YD/VG ;PHI/DA ;PSI/DP  -.0609 (.333) (.771)[.205;.176][.403;1.12]<-.000611>
 YD/VG ;THE/DB ;PSI/DP   .0198 (.00611) (.101) (.333) (.894)[.282;2.25]<.185E-4>

 XD/WG ;PHI/DA ;THE/DB  -.000975 (0) (0) (.333) (.333)[.392;1.57]<-.000267>
 XD/WG ;PHI/DA ;PSI/DP   .00714 (0) (.0759) (.333) (.360)[.00169;3.10]<.000625>
 XD/WG ;THE/DB ;PSI/DP   .00183 (0) (.333)[.479;.152][.330;1.98]<.552E-4>

 ZD/WG ;PHI/DA ;THE/DB  -.0905 (0) (.00468) (.333) (.333)[.375;1.93]<-.000176>
 ZD/WG ;PHI/DA ;PSI/DP  -.735 (.0720) (.333)[.224;.186][.395;.999]<-.000611>
 ZD/WG ;THE/DB ;PSI/DP   .230 (.00610) (.333)[.495;.102][.372;1.96]<.185E-4>

 XD/UG ; ZD/DC ;PHI/DA  -.151 (0) (.322) (.333)[.369;1.93][.0664;2.14]<-.274>
 XD/UG ; ZD/DC ;THE/DB   .0104 (0) (.0124) (.333)[.498;1.81][.231;1.94]<.000531>
 XD/UG ; ZD/DC ;PSI/DP   .379 (.320)[.496;.108][.335;1.95][.0880;2.17]<.0251>

 YD/VG ; ZD/DC ;PHI/DA  -.671 (0) (.333) (.848)[.648;.155][.304;1.13]<-.00656>
 YD/VG ; ZD/DC ;THE/DB   .244 (0) (.00550) (.333)[.977;.429][.232;2.54]<.000531>
 YD/VG ; ZD/DC ;PSI/DP   1.32 (.0959)[.596;.170][.336;1.15][.271;2.28]<.0251>

 XD/UG ;PHI/DA ;THE/DB ;PSI/DP   .000714 (.0718) (.333) (.333) (.924)<.526E-5>
 ZD/UG ;PHI/DA ;THE/DB ;PSI/DP  -.000393 (0) (.0694) (.333) (.333)<-.303E-5>
 YD/VG ;PHI/DA ;THE/DB ;PSI/DP   .0106 (.00488) (.333) (.333) (.914)<.526E-5>

 XD/WG ;PHI/DA ;THE/DB ;PSI/DP   .00111 (0) (.0781) (.333) (.333)<.967E-5>
 ZD/WG ;PHI/DA ;THE/DB ;PSI/DP   .135 (.00488) (.0720) (.333) (.333)<.526E-5>
 XD/UG ; ZD/DC ;PHI/DA ;THE/DB   .00585 (0) (.333) (.333)[.366;1.81]<.00212>

 YD/VG ; ZD/DC ;PHI/DA ;THE/DB   .114 (0) (.00504) (.333) (.333) (.867)<.556E-4>
 YD/VG ; ZD/DC ;PHI/DA ;PSI/DP   .703 (.333)[.511;.165][.315;1.12]<.00811>
 XD/WG ; ZD/DC ;PHI/DA ;THE/DB   .0210 (0) (.333) (.333)[.394;1.51]<.00530>

 XD/UG ; ZD/DC ;PHI/DA ;THE/DB ;PSI/DP  -.00810 (.0722) (.333) (.333)<-.650E-4>
 YD/VG ; ZD/DC ;PHI/DA ;THE/DB ;PSI/DP  -.121 (.00484) (.333) (.333)<-.650E-4>
 XD/WG ; ZD/DC ;PHI/DA ;THE/DB ;PSI/DP  -.0229 (.0751) (.333) (.333)<-.000191>
```

TABLE V-5 CONTINUED
UH-1H TRANSFER FUNCTION FACTORS

CASE 127 80KT BAR OFF

DENOMINATOR: (0) (.0523) (1.56)[.0531;.261][.546;1.11][.333;2.31]<.0363>

CONTROL NUMERATORS:

PHI/DA .564 (0)[-.0468;.119][.766;1.06][.351;2.36]<.359>
THE/DB -.172 (0) (.00934) (.0514)[.987;1.11][.333;2.30]<-.000545>
PSI/DP -1.65 (1.56)[-.0499;.265][.233;.295][.561;1.09]<-.0187>

PHI/DB .0624 (0) (-.0675) (.0871)[.288;2.26][.600;3.16]<-.0187>
THE/DA .114 (0) (1.02)[.625;.0308][.328;2.37]<.000621>

PHI/DA ;THE/DB -.0974 (0) (.00884) (1.06)[.353;2.36]<-.00506>
PHI/DA ;PSI/DP -.966 (.0960)[-.0310;.316][.754;1.07]<-.0106>
THE/DB ;PSI/DP .286 (.00931)[.0964;.294][.992; .11]<.000283>

PHI/DB ;PSI/DP -.139 (-.0622)[.990;.0884][.491;2.59]<.000454>
PHI/DP ;THE/DB -.0810 (0) (.00930) (.934) (-1.03) (1.59)<.00115>
PHI/DC ;THE/DB .00869 (0) (.00843) (-4.70)[.620;2.41]<-.00200>

THE/DA ;PSI/DP -.195 (.0287) (1.02)[.125;.258]<-.000381>
THE/DP ;PHI/DA -.0185 (0) (.0280) (-1.13) (1.26) (2.12)<.00157>
THE/DC ;PHI/DA .0349 (0) (.0203)[.278;2.14]<.00324>

PSI/DA ;THE/DB -.0116 (.00884) (1.03) (2.17)[-.241;2.09]<-.00117>
PSI/DB ;PHI/DA .0380 (.0720) (-.136) (.214)[.156;2.41]<-.000461>
XD/DB ;PHI/DA .537 (0) (1.05)[.352;2.35][.0671;2.43]<18.4>

YD/DA ;THE/DB -.152 (.00884) (1.06)[.311;2.28][.0162;4.63]<-.158>
ZD/DB ;PHI/DA 2.19 (0) (.0274)[.360;2.36][.147;2.52]<2.12>
XD/DC ;PHI/DA .0974 (0) (-2.15)[.314;1.90][.490;2.59]<-5.08>

YD/DP ;THE/DB -.383 (.00931) (.872) (2.05) (-2.58)[.479;1.53]<.0382>
ZD/DC ;PHI/DA -7.04 (0) (.283)[.277;.677][.344;2.34]<-5.01>

PHI/DA ;THE/DB ;PSI/DP .168 (.00892) (.0959) (1.05)<.000151>
PHI/DC ;THE/DB ;PSI/DP .0646 (.00846) (.0931)<.509E-4>
THE/DC ;PHI/DA ;PSI/DP -.0531 (.0211) (.0973)<-.000109>

PSI/DC ;PHI/DA ;THE/DB -.0193 (.00835) (.116) (2.08)<-.389E-4>
XD/DB ;PHI/DA ;PSI/DP -.918 (.0958) (1.04)[.0676;2.44]<-.545>
YD/DA ;THE/DB ;PSI/DP .282 (.00894) (1.05)[-.00547;4.31]<.0494>

ZD/DC ;PHI/DA ;THE/DB 1.21 (0) (.00773)[.348;2.14]<.0515>
ZD/DC ;PHI/DA ;PSI/DP 12.1 (.0961) (.266)[.263;.708]<.154>
XD/DC ;PHI/DA ;THE/DB -.0182 (0) (1.20)[.406;2.08]<-.0948>

XD/DC ;PHI/DA ;PSI/DP -.159 (.0974) (-2.10)[.442;2.25]<.165>
YD/DP ;PHI/DA ;THE/DB -.145 (.00893) (1.05) (3.83) (-3.93)<.0204>
ZD/DB ;PHI/DA ;PSI/DP -3.74 (.0277) (.0960)[.146;2.52]<-.0634>

ZD/DC ;PHI/DA ;THE/DB ;PSI/DP -2.11 (.00766) (.0964)<-.00156>
XD/DC ;PHI/DA ;THE/DB ;PSI/DP .0266 (.0985) (1.24)<.00325>

TABLE V-5 CONTINUED
UH-1H TRANSFER FUNCTION FACTORS

CASE 127 80KT BAR ON

DENOMINATOR: (0) (.0101) (.788)[.209;.177][.514;1.22][.414;2.08][.268;2.25]<.00809>

CONTROL NUMERATORS:

PHI/DA .564 (0) (.333) (.766)[.213;.178][.436;1.25][.350;2.36]<.0399>
THE/DB -.172 (0) (.333) (1.05)[.992;.00964][.449;2.05][.271;2.25]<-.000119>
PSI/DP -1.65 (.781)[.651;.0914][.225;.178][.496;1.22][.339;2.02]<-.00207>

PHI/DB .0624 (0) (-.0670) (.0870) (.333) (.336)[.290;2.26][.602;3.14]<-.00206>
THE/DA .114 (0) (.0232) (.0657) (.282) (.333) (1.02)[.330;2.37]<.937E-4>

PHI/DA ;THE/DB -.0974 (0) (.00884) (.333) (.333) (1.06)[.353;2.36]<-.000563>
PHI/DA ;PSI/DP -.966 (.0959) (.333) (.757)[.215;.177][.430;1.27]<-.00117>
THE/DB ;PSI/DP .286 (.00934) (.333) (1.05)[.655;.0932][.361;1.97]<.314E-4>

PHI/DB ;PSI/DP -.139 (-.0621) (.333) (.334)[.990;.0883][.491;2.59]<.504E-4>
PHI/DP ;THE/DB -.0810 (0) (.00933) (.333) (.401) (.876) (-.927) (1.47) <.000121>
PHI/DC ;THE/DB .00869 (0) (.00843) (.333) (.339) (-4.65)[.612;2.40]<-.000221>

THE/DA ;PSI/DP -.195 (.0287) (.333) (.333) (1.02)[.125;.258]<-.423E-4>
THE/DP ;PHI/DA -.0185 (0) (.0289) (.333) (.384) (-.996) (1.40) (1.80)<.000171>
THE/DC ;PHI/DA .0349 (0) (.0203) (.330) (.333)[.284;2.16]<.000361>

PSI/DA ;THE/DB -.0136 (.00884) (.333) (.333) (1.03) (2.17)[-.241;2.09]<-.000130>
PSI/DB ;PHI/DA .0380 (.0720) (-.136) (.214) (.333) (.333)[.156;2.41]<-.512E-4>
XD/DB ;PHI/DA .537 (0) (.333) (.333) (1.05)[.352;2.35][.0671;2.43]<2.05>

YD/DA ;THE/DB -.152 (.00884) (.333) (.333) (1.06)[.311;2.28][.0162;4.63]<-.0176>
ZD/DB ;PHI/DA 2.19 (0) (.0274) (.333) (.333)[.360;2.36][.147;2.52]<.235>
XD/DC ;PHI/DA .0974 (0) (.333) (.352) (-1.97)[.293;1.98][.466;2.58]<-.567>

YD/DP ;THE/DB -.383 (.00934) (.0766) (.333) (1.02) (2.61) (-2.78)[.240;2.50]<.00425>
ZD/DC ;PHI/DA -7.04 (0) (.333)[.603;.172][.326;1.21][.343;2.34]<-.556>

PHI/DA ;THE/DB ;PSI/DP .168 (.00892) (.0959) (.333) (.333) (1.05) <.168E-4>
PHI/DC ;THE/DB ;PSI/DP .0646 (.00846) (.0931) (.333) (.333) <.566E-5>
THE/DC ;PHI/DA ;PSI/DP -.0531 (.0211) (.0973) (.333) (.333) <-.121E-4>

PSI/DC ;PHI/DA ;THE/DB -.0193 (.00835) (.116) (.333) (.333) (2.08) <-.432E-5>
XD/DB ;PHI/DA ;PSI/DP -.918 (.0958) (.333) (.333) (1.04)[.0676;2.44]<-.0605>
YD/DA ;THE/DB ;PSI/DP .282 (.00894) (.333) (.333) (1.05)[-.00547;4.31]<.00549>

ZD/DC ;PHI/DA ;THE/DB 1.21 (0) (.00773) (.333) (.333)[.348;2.34]<.00572>
ZD/DC ;PHI/DA ;PSI/DP 12.1 (.0962) (.333)[.618;.173][.311;1.22]<.0172>
XD/DC ;PHI/DA ;THE/DB -.0182 (0) (.333) (.333) (1.20)[.406;2.08]<-.0105>

XD/DC ;PHI/DA ;PSI/DP -.159 (.0974) (.333) (.357) (-1.92)[.394;2.27]<.0183>
YD/DP ;PHI/DA ;THE/DB -.145 (.00893) (.333) (.333) (1.05) (3.83) (-3.93)<.00227>
ZD/DB ;PHI/DA ;PSI/DP -3.74 (.0277) (.0960) (.333) (.333)[.146;2.52]<-.00704>

ZD/DC ;PHI/DA ;THE/DB ;PSI/DP -2.11 (.00766) (.0964) (.333) (.333)<-.000173>
XD/DC ;PHI/DA ;THE/DB ;PSI/DP .0266 (.0985) (.333) (.333) (1.24)<.000361>

TABLE V-5 CONTINUED
UH-1H TRANSFER FUNCTION FACTORS
CASE 128 100KT BAR OFF

DENOMINATOR: (0) (.0507) (1.56)[.0896;.239][.477;1.35][.333;2.67]<.0583>

CONTROL NUMERATORS:

PHI/DA .578 (0)[.0359;.286][.654;1.32][.347;2.73]<.618>
THE/DB -.171 (0) (.0136) (.0532)[.980;1.15][.334;2.67]<-.00116>
PSI/DP -1.82 (1.56)[.0430;.258][.232;.271][.489;1.34]<-.0247>

PHI/DB .104 (0)[.256;.0789][.298;2.56][.461;3.15]<.0422>
THE/DA .138 (0) (1.13)[.466;.0323][.325;2.78]<.000962>

PHI/DA ;THE/DB -.0993 (0) (.0144) (1.21)[.389;2.73]<-.0130>
PHI/DA ;PSI/DP -1.10 (.121)[.0421;.285][.646;1.83]<-.0189>
THE/DB ;PSI/DP .315 (.0136)[.148;.291][.987;1.14]<.000474>

PHI/DB ;PSI/DP -.236 (.117)[.254;.0812][.398;2.66]<-.00129>
PHI/DP ;THE/DB -.0911 (0) (.0136) (.966) (-1.06) (1.87)<.00237>
PHI/DC ;THE/DB .0216 (0) (.0150) (-2.53)[.541;2.60]<-.00551>

THE/DA ;PSI/DP -.205 (.0401) (1.14)[.126;.268]<-.000656>
THE/DP ;PHI/DA -.0196 (0) (.0385) (-1.28)[.954;1.87]<.00139>
THE/DC ;PHI/DA -.0105 (0) (.0268) (-3.66)[.278;2.70]<.00753>

PSI/DA ;THE/DB -.0141 (.0144) (1.17) (2.17)[-.235;2.16]<-.00240>
PSI/DB ;PHI/DA .0405 (.221)[.0803;.0157][.212;2.64]<.154E-4>
XD/DB ;PHI/DA .478 (0) (1.28)[.0712;2.53][.346;2.72]<28.9>

YD/DA ;THE/DB -.155 (.0144) (1.22)[.289;2.59][.0318;4.69]<-.405>
ZD/DB ;PHI/DA 2.91 (0) (.0421)[.158;2.64][.353;2.73]<6.38>
XD/DC ;PHI/DA .255 (0) (-1.19)[.308;1.98][.406;2.71]<-8.82>

YD/DP ;THE/DB -.419 (.0136) (.873) (3.06) (-3.41)[.565;1.24]<.0801>
ZD/DC ;PHI/DA -7.61 (0) (.232)[.299;.854][.341;2.71]<-9.46>

PHI/DA ;THE/DB ;PSI/DP .190 (.0144) (.120) (1.20)<.000396>
PHI/DC ;THE/DB ;PSI/DP -.0212 (.0152) (.118) (-3.97)<.0001151>
THE/DC ;PHI/DA ;PSI/DP .0284 (.0276) (.121) (-3.11)<-.000256>

PSI/DC ;PHI/DA ;THE/DB -.0218 (.0144) (.142) (2.18)<-.975E-4>
XD/DB ;PHI/DA ;PSI/DP -.902 (.120) (1.26)[.0726;2.54]<-.884>
YD/DA ;THE/DB ;PSI/DP .319 (.0144) (1.21)[-.00549;4.29]<.102>

ZD/DC ;PHI/DA ;THE/DB 1.36 (0) (.0120)[.345;2.72]<.121>
ZD/DC ;PHI/DA ;PSI/DP 14.4 (.121) (.225)[.287;.879]<.303>
XD/DC ;PHI/DA ;THE/DB -.0352 (0) (.731)[.387;2.55]<-.167>

XD/DC ;PHI/DA ;PSI/DP -.468 (.122) (-1.19)[.365;2.07]<.290>
YD/DP ;PHI/DA ;THE/DB -.160 (.0144) (1.20) (4.87) (-4.98)<.0669>
ZD/DB ;PHI/DA ;PSI/DP -5.52 (.0421) (.121)[.156;2.64]<-.195>

ZD/DC ;PHI/DA ;THE/DB ;PSI/DP -2.62 (.0117) (.121)<-.001731>
XD/DC ;PHI/DA ;THE/DB ;PSI/DP .0609 (.123) (.783)<.00587>

TABLE V-5 CONTINUED
UH-1H TRANSFER FUNCTION FACTORS

CASE 128 100KT BAR ON

DENOMINATOR: (0) (.0106) (.719)[.220;.175]X[.541;1.42]X[.318;2.15]X[.324;2.58]<.0145>

CONTROL NUMERATORS:

PHI/DA .578 (0) (.333) (.699)[.223;.176]X[.439;1.49]X[.347;2.73]<.0686>
THE/DB -.171 (0) (.00983) (.0150) (.333) (1.20)[.369;2.09]X[.322;2.57]<-.000293>
PSI/DP -1.82 (.715)[.809;.0887]X[.232;.176]X[.525;1.42]X[.302;2.07]<-.00275>

PHI/DB .104 (0) (.333) (.335)[.258;.0790]X[.299;2.56]X[.462;3.13]<.00468>
THE/DA .108 (0) (.277) (.333) (1.13)[.954;.0450]X[.327;2.74]<.000172>

PHI/DA ;THE/DB -.0993 (0) (.0144) (.333) (.333) (1.21)[.349;2.73]<-.00194>
PHI/DA ;PSI/DP -1.10 (.120) (.333) (.693)[.224;.175]X[.435;1.50]<-.00210>
THE/DB ;PSI/DP .315 (.0134) (.333) (1.19)[.821;.0887]X[.334;1.99]<.527E-4>

PHI/DB ;PSI/DP -.236 (.117) (.333) (.334)[.254;.0810]X[.394;2.66]<-.000143>
PHI/DP ;THE/DB -.0911 (0) (.0145) (.333) (.419) (.859) (-.914) (1.75)<.000237>
PHI/DC ;THE/DB .0216 (0) (.0150) (.333) (.338) (-2.48)[.533;2.59]<-.000608>

THE/DA ;PSI/DP -.205 (.0401) (.333) (.333) (1.14)[.126;.264]<-.728E-4>
THE/DP ;PHI/DA -.0196 (0) (.0400) (.333) (.381) (-1.11)[.917;1.82]<.000365>
THE/DC ;PHI/DA -.0105 (0) (.0267) (.331) (.333) (-3.69)[.284;2.71]<.000839>

PSI/DA ;THE/DB -.0141 (.0144) (.333) (.333) (1.17) (2.17)[-.235;2.16]<-.000266>
PSI/DB ;PHI/DA .0405 (.221) (.333) (.333)[.0803;.0157]X[.212;2.64]<.171E-5>
XD/DB ;PHI/DA .478 (0) (.333) (.333) (1.28)[.0712;2.53]X[.346;2.72]<3.21>

YD/DA ;THE/DB -.155 (.0144) (.333) (.333) (1.22)[.289;2.59]X[.0318;4.69]<-.0450>
ZD/DB ;PHI/DA 2.91 (0) (.0421) (.333) (.333)[.158;2.64]X[.353;2.73]<.709>
XD/DC ;PHI/DA .255 (0) (.333) (.346) (-1.07)[.271;2.05]X[.400;2.72]<-.985>

YD/DP ;THE/DB -.419 (.0134) (.0586) (.333) (1.15) (3.43) (-3.58)[.249;2.39]<.00890>
ZD/DC ;PHI/DA -7.61 (0) (.333)[.694;.179]X[.312;1.33]X[.341;2.71]<-1.05>

PHI/DA ;THE/DB ;PSI/DP .190 (.0144) (.120) (.333) (.333) (1.20)<.440E-4>
PHI/DC ;THE/DB ;PSI/DP -.0212 (.0152) (.118) (.333) (.333) (-3.97)<.168E-4>
THE/DC ;PHI/DA ;PSI/DP .0248 (.0276) (.121) (.333) (.333) (-1.11)<-.284E-4>

PSI/DC ;PHI/DA ;THE/DB -.0218 (.0144) (.142) (.333) (.333) (2.18)<-.108E-4>
XD/DB ;PHI/DA ;PSI/DP -.902 (.120) (.333) (.333) (1.26)[.0726;2.54]<-.0982>
YD/DA ;THE/DB ;PSI/DP .319 (.0144) (.333) (.333) (1.21)[-.00550;4.29]<.0114>

ZD/DC ;PHI/DA ;THE/DB 1.36 (0) (.0120) (.333) (.333)[.345;2.72]<.0134>
ZD/DC ;PHI/DA ;PSI/DP 14.4 (.121) (.333)[.704;.160]X[.302;1.34]<.0337>
XD/DC ;PHI/DA ;THE/DB -.0352 (0) (.333) (.333) (.731)[.387;2.55]<-.0186>

XD/DC ;PHI/DA ;PSI/DP -.468 (.122) (.333) (.350) (-1.06)[.318;2.14]<.0123>
YD/DP ;PHI/DA ;THE/DB -.160 (.0144) (.333) (.333) (1.20) (4.87) (-4.98)<.00743>
ZD/DB ;PHI/DA ;PSI/DP -5.52 (.0421) (.121) (.333) (.333)[.156;2.64]<-.0217>

ZD/DC ;PHI/DA ;THE/DB ;PSI/DP -2.62 (.0117) (.121) (.333) (.333)<-.000414>
XD/DC ;PHI/DA ;THE/DB ;PSI/DP .0609 (.123) (.333) (.333) (.781)<.000652>

MICROFILMED FROM
BEST AVAILABLE COPY

TABLE V-5 CONTINUED
UH-1H TRANSFER FUNCTION FACTORS

CASE 129 120KT BAR OFF

DENOMINATOR: (0) (.0502) (1.48)[.116;.215][.440;1.60][.329;2.99]<.0793>

CONTROL NUMERATORS:

PHI/DA .591 (0)[.0821;.253][.566;1.62][.344;3.07]<.935>
THE/DB -.172 (0) (.0196) (.0568)[.997;1.16][.330;2.99]<-.00231>
PSI/DP -1.99 (1.49)[.236;.187][.0976;.331][.450;1.61]<-.0293>

PHI/DB .163 (0)[.263;.103][.319;2.80][.862;3.24]<.141>
THE/DA .0948 (0) (1.29)[.413;.0345][.316;3.09]<.00138>

PHI/DA ;THE/DB -.102 (0) (.0221) (1.39)[.345;3.07]<-.0297>
PHI/DA ;PSI/DP -1.23 (.146)[.0882;.252][.561;1.62]<-.0300>
THE/DB ;PSI/DP .343 (.0185) (1.11) (1.22)[.206;.280]<.000671>

PHI/DB ;PSI/DP -.375 (.141)[.262;.103][.334;2.79]<-.00846>
PHI/DP ;THE/DB -.107 (0) (.0184) (.956) (-.984) (2.10)<.00388>
PHI/DC ;THE/DB .0435 (0) (.0236) (-1.57)[.488;2.77]<-.0124>

THE/DA ;PSI/DP -.199 (.0458) (1.31)[.108;.379]<-.00171>
THE/DP ;PHI/DA -.0113 (0) (.3444) (-3.33)[.995;2.54]<.0108>
THE/DC ;PHI/DA -.0240 (0) (.0346) (-1.93)[.299;3.12]<.0156>

PSI/DA ;THE/DB -.0155 (.0221) (1.36) (2.07)[-.288;2.18]<-.00457>
PSI/DB ;PHI/DA .0331 (.290)[.178;.0692][.297;2.86]<.000375>
XD/DB ;PHI/DA .368 (0) (1.72)[.0592;2.69][.344;3.06]<43.0>

YD/DA ;THE/DB -.159 (.0221) (1.40)[.250;2.84][.0615;4.84]<-.926>
ZD/DB ;PHI/DA 3.64 (0) (.0547)[.163;2.80][.345;3.08]<14.8>
XD/DC ;PHI/DA .475 (0) (-.818)[.298;2.01][.378;2.97]<-13.8>

YD/DP ;THE/DB -.461 (.0185) (.867) (3.96) (-4.19)[.668;1.05]<.136>
ZD/DC ;PHI/DA -8.07 (0) (.200)[.297;1.04][.338;3.04]<-16.0>

PHI/DA ;THE/DB ;PSI/DP .213 (.0220) (.146) (1.38)<.000947>
PHI/DC ;THE/DB ;PSI/DP -.0587 (.0241) (.144) (-1.81)<.000168>
THE/DC ;PHI/DA ;PSI/DP .0535 (.0357) (.147) (-2.05)<-.000577>

PSI/DC ;PHI/DA ;THE/DB -.0307 (.0224) (.168) (1.92)<-.000222>
XD/DB ;PHI/DA ;PSI/DP -.758 (.145) (1.70)[.0648;2.71]<-1.37>
YD/DA ;THE/DB ;PSI/DP .359 (.0221) (1.39)[-.00829;4.29]<.202>

ZD/DC ;PHI/DA ;THE/DB 1.54 (0) (.0183)[.341;3.05]<.263>
ZD/DC ;PHI/DA ;PSI/DP 16.8 (.145) (.193)[.286;1.08]<.551>
XD/DC ;PHI/DA ;THE/DB -.0672 (0) (.490)[.369;2.90]<-.276>

XD/DC ;PHI/DA ;PSI/DP -.944 (.148) (-.854)[.138;2.05]<.499>
YD/DP ;PHI/DA ;THE/DB -.175 (.0221) (1.38) (5.94) (-6.07)<.192>
ZD/DB ;PHI/DA ;PSI/DP -7.57 (.0545) (.146)[.160;2.80]<-.471>

ZD/DC ;PHI/DA ;THE/DB ;PSI/DP -3.24 (.0176) (.146)<-.00834>
XD/DC ;PHI/DA ;THE/DB ;PSI/DP .131 (.150) (.346;<.0107>

TABLE V-5 CONTINUED
UH-1H TRANSFER FUNCTION FACTORS

CASE 129 120KT BAR ON

DENOMINATOR: (0) (.0114) (.654)[.232;.167][.537;1.64][.276;2.21][.326;2.92]<.0235>

CONTROL NUMERATORS:

PHI/DA .591 (0) (.333) (.641)[.234;.168][.422;1.76][.344;3.07]<.104>
THE/DB -.172 (0) (.0105) (.0226) (.333) (1.38)[.329;2.09][.328;2.92]<-.000696>
PSI/DP -1.99 (.656)[.989;.0842][.255;.169][.519;1.63][.268;2.15]<-.00325>

PHI/DB .163 (0) (.333) (.335)[.264;.103][.319;2.80][.362;3.23]<.0157>
THE/DA .0948 (0) (.253) (.333) (1.29)[.935;.0575][.320;3.08]<.000323>

PHI/DA ;THE/DB -.102 (0) (.0221) (.333) (.333) (1.39)[.345;3.07]<-.00330>
PHI/DA ;PSI/DP -1.23 (.146) (.333) (.638)[.235;.167][.420;1.77]<-.00333>
THE/DB ;PSI/DP .343 (.0166) (.0685) (.103) (.333) (1.37)[.306;2.02]<.746E-4>

PHI/DB ;PSI/DP -.375 (.143) (.333) (.334)[.263;.103][.331;2.79]<-.000496>
PHI/DP ;THE/DB -.107 (0) (.0177) (.333) (.497) (.709) (-.775) (1.98)<.000140>
PHI/DC ;THE/DB .0435 (0) (.0237) (.333) (.338) (-1.53)[.479;2.77]<-.00136>

THE/DA ;PSI/DP -.199 (.0459) (.333) (.333) (1.31)[.108;.379]<-.000190>
THE/DP ;PHI/DA -.0113 (0) (.0455) (.333) (.362) (-3.05)[.946;2.48]<.00116>
THE/DC ;PHI/DA -.0240 (0) (.0345) (.331) (.333) (-1.96)[.304;3.11]<.00174>

PSI/DA ;THE/DB -.0155 (.0221) (.333) (.333) (1.36) (2.07)[-.288;2.18]<-.000508>
PSI/DB ;PHI/DA .0331 (.290) (.333) (.333)[.178;.0692][.297;2.86]<.417E-4>
ID/DB ;PHI/DA .368 (0) (.333) (.333) (1.72)[.0592;2.69][.344;3.06]<4.77>

YD/DA ;THE/DB -.159 (.0221) (.333) (.333) (1.40)[.250;2.84][.0615;4.84]<-.103>
ZD/DB ;PHI/DA 3.64 (0) (.0547) (.333) (.333)[.163;2.80][.345;3.08]<1.64>
ID/DC ;PHI/DA .475 (0) (.333) (.339) (-.724)[.260;2.12][.377;2.98]<-1.55>

YD/DP ;THE/DB -.461 (.0165) (.0458) (.333) (1.31) (4.22) (-4.34)[.285;2.32]<.0151>
ZD/DC ;PHI/DA -8.07 (0) (.333)[.769;.182][.295;1.47][.338;3.04]<-1.78>

PHI/DA ;THE/DB ;PSI/DP .213 (.0220) (.146) (.333) (.333) (1.38)<.000105>
PHI/DC ;THE/DB ;PSI/DP -.0587 (.0241) (.144) (.333) (.333) (-1.81)<.409E-4>
THE/DC ;PHI/DA ;PSI/DP .0535 (.0357) (.147) (.333) (.333) (-2.05)<-.641E-4>

PSI/DC ;PHI/DA ;THE/DB -.0307 (.0224) (.168) (.333) (.333) (1.92)<-.287E-4>
ID/DB ;PHI/DA ;PSI/DP -.758 (.145) (.333) (.333) (1.70)[.0648;2.71]<-.153>
YD/DA ;THE/DB ;PSI/DP .359 (.0221) (.333) (.333) (1.39)[-.00829;4.29]<.0225>

ZD/DC ;PHI/DA ;THE/DB 1.54 (0) (.0183) (.333) (.333)[.341;3.05]<.0292>
ZD/DC ;PHI/DA ;PSI/DP 16.8 (.146) (.333)[.787;.183][.286;1.50]<.0612>
ID/DC ;PHI/DA ;THE/DB -.0672 (0) (.333) (.333) (.490)[.369;2.90]<-.0307>

ID/DC ;PHI/DA ;PSI/DP -.944 (.148) (.333) (.344) (-.748)[.294;2.15]<.0554>
YD/DP ;PHI/DA ;THE/DB -.175 (.0221) (.333) (.333) (1.38) (5.94) (-6.07)<.0213>
ZD/DB ;PHI/DA ;PSI/DP -7.57 (.0545) (.146) (.333) (.333)[.160;2.80]<-.0526>

ZD/DC ;PHI/DA ;THE/DB ;PSI/DP -3.24 (.0176) (.146) (.333) (.333)<-.000926>
ID/DC ;PHI/DA ;THE/DB ;PSI/DP .131 (.150) (.333) (.333) (.546)<.00119>

TABLE V-5 CONTINUED
UH-1H TRANSFER FUNCTION FACTORS

CASE 130 130KT BAR OFF

DENOMINATOR: (0) (.0527) (1.41)[.131;.203][.428;1.72][.329;3.13]<.0886>

CONTROL NUMERATORS:

PHI/DA .602 (0)[.0977;.241][.536;1.74][.385;3.23]<1.11>
THE/DB -.176 (0) (.0240) (.0597) (.966) (1.34)[.329;3.13]<-.00322>
PSI/DP -2.04 (1.44)[.280;.165][.0869;.346][.437;1.72]<-.0284>

PHI/DB .194 (0)[.317;.0930][.340;2.95][.319;3.25]<.155>
THE/DA .0902 (0) (1.36)[.444;.0372][.351;3.24]<.00178>

PHI/DA ;THE/DB -.107 (0) (.0268) (1.46)[.383;3.23]<-.0435>
PHI/DA ;PSI/DP -1.29 (.159)[.103;.240][.533;1.75]<-.0362>
THE/DB ;PSI/DP .359 (.0230) (.949) (1.38)[.239;.271]<.000796>

PHI/DB ;PSI/DP -.438 (.157)[.317;.0936][.316;2.89]<-.00500>
PHI/DP ;THE/DB -.116 (0) (.0229) (.898) (-.921) (2.22)<.00487>
PHI/DC ;THE/DB .0577 (0) (.0283) (-1.29)[.474;2.83]<-.0169>

THE/DA ;PSI/DP -.195 (.0873) (1.39)[.0999;.421]<-.00226>
THE/DP ;PHI/DA -.0106 (0) (.0461) (-4.06)[.986;2.80]<.0155>
THE/DC ;PHI/DA -.0299 (0) (.0390) (-1.65)[.299;3.30]<.0210>

PSI/DA ;THE/DB -.0162 (.0268) (1.44) (2.03)[-.340;2.20]<-.00618>
PSI/DB ;PHI/DA .0201 (.399)[.162;.0602][.414;3.15]<.000288>
XD/DB ;PHI/DA .300 (0) (2.09)[.0464;2.81][.347;3.23]<51.7>

YD/DA ;THE/DB -.167 (.0268) (1.45)[.225;2.93][.0811;8.92]<-1.36>
ZD/DB ;PHI/DA 4.01 (0) (.0610)[.165;2.90][.344;3.23]<21.5>
XD/DC ;PHI/DA .604 (0) (-.702)[.295;2.01][.373;3.09]<-16.4>

YD/DP ;THE/DB -.484 (.0230) (.830) (4.41) (-4.59)[.731;.966]<.175>
ZD/DC ;PHI/DA -8.35 (0) (.196)[.297;1.10][.337;3.19]<-20.1>

PHI/DA ;THE/DB ;PSI/DP .229 (.0268) (.159) (1.45)<.00181>
PHI/DC ;THE/DB ;PSI/DP -.0808 (.0287) (.157) (-1.41)<.000512>
THE/DC ;PHI/DA ;PSI/DP .0679 (.0399) (.161) (-1.83)<-.000798>

PSI/DC ;PHI/DA ;THE/DB -.0396 (.0270) (.181) (1.69)<-.000328>
XD/DB ;PHI/DA ;PSI/DP -.636 (.158) (2.08)[.0534;2.83]<-1.68>
YD/DA ;THE/DB ;PSI/DP .385 (.0269) (1.45)[-.0101;4.29]<.277>

ZD/DC ;PHI/DA ;THE/DB 1.68 (0) (.0226)[.340;3.20]<.387>
ZD/DC ;PHI/DA ;PSI/DP 17.9 (.156) (.189)[.285;1.17]<.716>
XD/DC ;PHI/DA ;THE/DB -.0921 (0) (.398)[.364;3.03]<-.337>

XD/DC ;PHI/DA ;PSI/DP -1.22 (.161) (-.746)[.332;2.04]<.611>
YD/DP ;PHI/DA ;THE/DB -.184 (.0268) (1.44) (6.52) (-6.66)<.109>
ZD/DB ;PHI/DA ;PSI/DP -8.58 (.0608) (.159)[.161;2.90]<-.696>

ZD/DC ;PHI/DA ;THE/DB ;PSI/DP -3.62 (.0217) (.159)<-.0125>
XD/DC ;PHI/DA ;THE/DB ;PSI/DP .183 (.164) (.443)<.0133>

TABLE V-5 CONTINUED

UH-1H TRANSFER FUNCTION FACTORS

CASE 130 130KT BAR ON

DENOMINATOR: (0) (.0119) (.633)[.242;.163][.524;1.74][.257;2.25][.328;3.07]<.0289>

CONTROL NUMERATORS:

PHI/DA .602 (0) (.333) (.622)[.242;.164][.411;1.88][.345;3.23]<.123>
THE/DB -.176 (0) (.0112) (.0272) (.333) (1.44)[.308;2.10][.329;3.07]<-.00106>
PSI/DP -2.04 (.0483) (.128) (.638)[.271;.166][.507;1.72][.253;2.20]<-.00316>

PHI/DB .194 (0) (.333) (.334)[.318;.0930][.338;2.95][.320;3.25]<.0172>
THE/DA .0901 (0) (.229) (.333) (1.36)[.980;.0689][.315;3.24]<.000467>

PHI/DA ;THE/DB -.107 (0) (.0268) (.333) (.333) (1.46)[.344;3.23]<-.00483>
PHI/DA ;PSI/DP -1.29 (.159) (.333) (.620)[.244;.163][.410;1.89]<-.00402>
THE/DB ;PSI/DP .359 (.0191) (.0480) (.136) (.333) (1.44)[.288;2.03]<.885E-4>

PHI/DB ;PSI/DP -.438 (.157) (.333) (.334)[.318;.0934][.316;2.89]<-.000556>
PHI/DP ;THE/DB -.116 (0) (.0217) (.333) (-.656) (2.09)[.956;.575]<.000379>
PHI/DC ;THE/DB .0577 (0) (.0283) (.333) (.338) (-1.25)[.434;2.84]<-.00184>

THE/DA ;PSI/DP -.195 (.0473) (.333) (.333) (1.39)[.0999;.421]<-.000252>
THE/DP ;PHI/DA -.0106 (0) (.0471) (.333) (.358) (-3.73)[.943;2.74]<.00166>
THE/DC ;PHI/DA -.0299 (0) (.0389) (.332) (.333) (-1.69)[.305;3.29]<.00235>

PSI/DA ;THE/DB -.0162 (.0268) (.333) (.333) (1.44) (2.03)[-.340;2.20]<-.000686>
PSI/DB ;PHI/DA .0201 (.333) (.333) (.399)[.162;.0602][.414;3.15]<.120E-4>
ID/DB ;PHI/DA .300 (0) (.333) (.333) (2.09)[.0464;2.81][.347;3.23]<5.74>

YD/DA ;THE/DB -.167 (.0268) (.333) (.333) (1.46)[.225;2.93][.0811;4.92]<-.151>
ZD/DB ;PHI/DA 4.01 (0) (.0610) (.333) (.333)[.165;2.90][.344;3.23]<2.38>
XD/DC ;PHI/DA .604 (0) (.333) (.335) (-.617)[.257;2.14][.372;3.10]<-1.83>

YD/DP ;THE/DB -.484 (.0187) (.0404) (.333) (1.37) (4.64) (-4.73)[.236;2.30]<.0194>
ZD/DC ;PHI/DA -8.35 (0) (.333)[.789-.184][.291;1.54][.337;3.19]<-2.26>

PHI/DA ;THE/DB ;PSI/DP .229 (.0268) (.159) (.333) (.333) (1.45)<.000157>
PHI/DC ;THE/DB ;PSI/DP -.0808 (.0287) (.157) (.333) (.333) (-1.41)<.569E-4>
THE/DC ;PHI/DA ;PSI/DP .0679 (.0399) (.161) (.333) (.333) (-1.83)<-.887E-4>

PSI/DC ;PHI/DA ;THE/DB -.0396 (.0270) (.181) (.333) (.333) (1.69)<-.365E-4>
XD/DB ;PHI/DA ;PSI/DP -.636 (.158) (.333) (.333) (2.08)[.0534;2.83]<-.186>
YD/DA ;THE/DB ;PSI/DP .385 (.0269) (.333) (.333) (1.45)[-.0101;4.29]<.0303>

ZD/DC ;PHI/DA ;THE/DB 1.68 (0) (.0226) (.333) (.333)[.340;3.20]<.0430>
ZD/DC ;PHI/DA ;PSI/DP 17.9 (.159) (.333)[.810;.184][.281;1.57]<.0795>
XD/DC ;PHI/DA ;THE/DB -.0921 (0) (.333) (.333) (.398)[.364;3.03]<-.0374>

XD/DC ;PHI/DA ;PSI/DP -1.22 (.161) (.333) (.340) (-.647)[.288;2.17]<.0678>
YD/DP ;PHI/DA ;THE/DB -.184 (.0268) (.333) (.333) (1.44) (6.52) (-6.66)<.0348>
ZD/DB ;PHI/DA ;PSI/DP -8.58 (.0608) (.159) (.333) (.333)[.161;2.90]<-.0773>

ZD/DC ;PHI/DA ;THE/DB ;PSI/DP -3.62 (.0217) (.159) (.333) (.333)<-.00139>
XD/DC ;PHI/DA ;THE/DB ;PSI/DP .183 (.164) (.333) (.333) (.443)<.00147>

MICROFILMED FROM
BEST AVAILABLE COPY

TABLE V-5 CONTINUED

UH-1H TRANSFER FUNCTION FACTORS

CASE 132 60KT MAX CLIMB BAR OFF

DENOMINATOR: (0) (.0708) (-.175) (.214) (.848)[.291;1.33][.406;1.80]<-.0129>

CONTROL NUMERATORS:

PHI/DA .628 (0) (-.188) (.232)[.402;1.40][.431;1.90]<-.194>
THE/DB -.193 (0) (.469) (1.04)[.881;.0546][.378;1.80]<-.000914>
PSI/DP -1.38 (.127) (-.141) (.869)[-.217;.222][.370;1.39]<.00206>

PHI/DB .0619 (0) (-.150) (.191)[.433;1.78][.526;2.94]<-.0486>
THE/DA .123 (0) (.0276) (.122) (1.38)[.102;2.04]<.00186>

PHI/DA ;THE/DB -.121 (0) (.0448) (.997)[.412;1.95]<-.0207>
PHI/DA ;PSI/DP -.906 (.0824) (-.216) (.287)[.431;1.30]<.00787>
THE/DB ;PSI/DP .266 (.0289) (-.242) (1.02)[.648;.578]<-.0006636>

PHI/DB ;PSI/DP -.0766 (.0822) (-.172) (.222)[.613;2.81]<.00190>
PHI/DP ;THE/DB -.0804 (0) (.0292) (.997)[.281;.921]<-.00199>
PHI/DC ;THE/DB .0227 (0) (.0379) (-3.01)[.669;1.47]<-.00561>

THE/DA ;PSI/DP -.184 (.0316) (1.03)[-.388;.750]<-.00338>
THE/DP ;PHI/DA -.0157 (0) (.0316) (.996) (3.80) (-5.25)<.00988>
THE/DC ;PHI/DA .0269 (0) (.0325) (4.92)[.0776;1.57]<.0106>

PSI/DA ;THE/DB -.0165 (.0448) (-.832) (.988) (2.99) (-3.81)<-.00694>
PSI/DB ;PHI/DA -.0188 (.0863)[-.0532;.404][.244;3.26]<-.00282>
XD/DB ;PHI/DA .711 (0) (.822)[.423;1.97][.0496;2.62]<15.6>

YD/DA ;THE/DB -.190 (.0448) (.998)[.351;1.79][.0374;4.98]<-.644>
ZD/DB ;PHI/DA 1.56 (0) (.0188)[.403;1.97][.0853;2.69]<.824>
XD/DC ;PHI/DA .0502 (0) (-6.25)[.0739;1.55][.691;3.82]<-11.0>

YD/DP ;THE/DB -.360 (.0287) (.985)[.533;1.54][-.451;1.56]<-.0590>
ZD/DC ;PHI/DA -7.21 (0) (-.0543)[.268;1.13][.320;1.96]<1.90>

PHI/DA ;THE/DB ;PSI/DP .175 (.0498) (.0801) (.997)<.000694>
PHI/DC ;THE/DB ;PSI/DP .0225 (.3385) (.0838) (2.87)<.000208>
THE/DC ;PHI/DA ;PSI/DP -.0279 (.0324) (.0859) (5.85)<-.000454>

PSI/DC ;PHI/DA ;THE/DB -.0833 (.0349) (.100) (.693)<-.000202>
XD/DB ;PHI/DA ;PSI/DP -1.01 (.0809) (.843)[.0551;2.61]<-.479>
YD/DA ;THE/DB ;PSI/DP .293 (.0490) (.996)[-.0172;4.56]<.298>

ZD/DC ;PHI/DA ;THE/DB 1.33 (0) (.0498)[.375;1.94]<.247>
ZD/DC ;PHI/DA ;PSI/DP 10.4 (-.0528) (.0844)[.168;1.29]<-.0771>
XD/DC ;PHI/DA ;THE/DB -.0402 (0) (3.58)[.0320;1.48]<-.316>

XD/DC ;PHI/DA ;PSI/DP .145 (.0858)[.547;6.14]<.470>
YD/DP ;PHI/DA ;THE/DB -.147 (.0493) (.997) (2.84) (-3.13)<.0644>
ZD/DB ;PHI/DA ;PSI/DP -2.26 (.0256) (.0802)[.0862;2.71]<-.0340>

ZD/DC ;PHI/DA ;THE/DB ;PSI/DP -1.94 (.0568) (.0795)<-.00877>
XD/DC ;PHI/DA ;THE/DB ;PSI/DP .0122 (.0861) (4.96)<.0138>

TABLE V-5 CONTINUED

UH-1H TRANSFER FUNCTION FACTORS

CASE 132 60KT MAX CLIMB BAR ON

DENOMINATOR: (0) (.0160) (-.123) (.136) (.620)[.282; 1.69][.513; 1.81][.0979; 2.04]<-.00647>

CONTROL NUMERATORS:

PHI/DA .628 (0) (-.122) (.137) (.333) (.614)[.243; 1.65][.448; 1.93]<-.0217>
THE/DB -.193 (0) (.0134) (.0442) (.333) (1.00)[.494; 1.88][.0969; 2.03]<-.000557>
PSI/DP -1.38 (.0162) (.0623) (-.147) (.168) (.655)[.291; 1.50][.195; 2.12]<.000229>

PHI/DB .0619 (0) (-.144) (.203) (.306) (.333)[.422; 1.80][.529; 2.95]<-.00521>
THE/DA .123 (0) (.0383) (.333) (1.07)[.731; .278][.120; 2.02]<.000531>

PHI/DA ;THE/DB -.121 (0) (.0448) (.333) (.333) (.997)[.412; 1.95]<-.00230>
PHI/DA ;PSI/DP -.906 (.0826) (-.140) (.155) (.333) (.641)[.275; 1.59]<.000874>
THE/DB ;PSI/DP .266 (.0328) (-.0453) (.129) (.333) (.000)[.196; 2.04]<-.707E-4>

PHI/DB ;PSI/DP -.0766 (.0822) (-.171) (.219) (.333) (.339)[.611; 2.82]<.000211>
PHI/DP ;THE/DB -.0804 (0) (.0308) (.249) (.333) (.997)[.263; 1.14]<-.000266>
PHI/DC ;THE/DB .0227 (0) (.0379) (.333) (.345) (-2.86)[.616; 1.47]<-.000611>

THE/DA ;PSI/DP -.184 (.0316) (.333) (.333) (1.03)[-.388; .750]<-.000376>
THE/DP ;PHI/DA -.0157 (0) (.0314) (.333) (.354) (.996) (3.61) (-5.08)<.00107>
THE/DC ;PHI/DA .0269 (0) (.0325) (.330) (.333) (4.85)[.101; 1.60]<.00119>

PSI/DA ;THE/DB -.0165 (.0448) (.333) (.333) (-.832) (.988) (2.99) (-3.81)<-.000771>
PSI/DB ;PHI/DA -.0188 (.0863) (.333) (.333)[-.0532; .404][.244; 3.26]<-.000313>
XD/DB ;PHI/DA .711 (0) (.333) (.333) (.822)[.423; 1.97][.0496; 2.62]<1.73>

YD/DA ;THE/DB -.190 (.0448) (.333) (.333) (.998)[.351; 1.79][.0374; 4.88]<-.0715>
ZD/DB ;PHI/DA 1.56 (0) (.0188) (.333) (.333)[.403; 1.97][.0853; 2.69]<.0916>
XD/DC ;PHI/DA .0502 (0) (.333) (.386) (-5.94)[.107; 1.58][.670; 3.59]<-1.23>

YD/DP ;THE/DB -.360 (.0342) (-.132) (.333) (1.00) (-1.18) (1.48)[.0705; 2.63]<-.00656>
ZD/DC ;PHI/DA -7.21 (0) (-.0462) (.225) (.333)[.272; 1.51][.293; 1.93]<.212>

PHI/DA ;THE/DB ;PSI/DP .175 (.0498) (.0801) (.333) (.333) (.997)<.771E-4>
PHI/DC ;THE/DB ;PSI/DP .0225 (.0385) (.0838) (.333) (.333) (2.87)<.231E-4>
THE/DC ;PHI/DA ;PSI/DP -.0279 (.0324) (.0859) (.333) (.333) (5.85)<-.505E-4>

PSI/DC ;PHI/DA ;THE/DB -.0833 (.0349) (.100) (.333) (.333) (.693)<-.224E-4>
XD/DB ;PHI/DA ;PSI/DP -1.03 (.0809) (.333) (.333) (.843)[.0551; 2.61]<-.0532>
YD/DA ;THE/DB ;PSI/DP .293 (.0490) (.333) (.333) (.996)[-.0172; 4.56]<.0331>

ZD/DC ;PHI/DA ;THE/DB 1.33 (0) (.0498) (.333) (.333)[.375; 1.94]<.0275>
ZD/DC ;PHI/DA ;PSI/DP 10.4 (-.0461) (.0846) (.243) (.333)[.160; 1.61]<-.00857>
XD/DC ;PHI/DA ;THE/DB -.0402 (0) (.333) (.333) (3.58)[.0320; 1.48]<-.0351>

XD/DC ;PHI/DA ;PSI/DP .142 (.0858) (.333) (.388)[.486; 5.75]<.0522>
YD/DP ;PHI/DA ;THE/DB -.147 (.0493) (.333) (.333) (.997) (2.84) (-3.13)<.00716>
ZD/DB ;PHI/DA ;PSI/DP -2.26 (.0256) (.0802) (.333) (.333)[.0862; 2.71]<-.00378>

ZD/DC ;PHI/DA ;THE/DB ;PSI/DP -1.94 (.0568) (.0795) (.333) (.333)<-.000974>
XD/DC ;PHI/DA ;THE/DB ;PSI/DP .0322 (.0861) (.333) (.333) (4.96)<.00153>

TABLE V-5 CONTINUED
UH-1H TRANSFER FUNCTION FACTORS
CASE 134 60 KT AUTOROTATION BAR OFF

DENOMINATOR: (0) (.0681) (1.57)[.127;.239][.423;1.46][.371;1.94]<.0490>

CONTROL NUMERATORS:

PHI/DA .531 (0)[.158;.259][.499;1.38][.365;1.90]<.245>
THE/DB -.170 (0) (-.00405) (.0683) (1.13) (1.37)[.346;1.94]<.000272>
PSI/DP -1.50 (1.56)[.295;.296][.0140;.303][.468;1.43]<-.0389>

PHI/DB .0315 (0) (.0635) (-.0803)[.171;1.88][.924;3.72]<-.00787>
THE/DA .110 (0) (.0145) (-.0528) (.900)[.364;1.90]<-.000275>

PHI/DA ;THE/DB -.0901 (0) (-.00391) (1.03)[.366;1.93]<.00131>
PHI/DA ;PSI/DP -.833 (.0600)[.157;.269][.499;1.37]<-.00636>
THE/DB ;PSI/DP .256 (-.00403) (1.10) (1.38)[.149;.371]<-.000215>

PHI/DB ;PSI/DP -.0960 (-.121)[.981;.0781][.608;2.35]<.000392>
PHI/DP ;THE/DB -.0757 (0) (-.00402) (1.04) (-1.27) (1.61)<-.000645>
PHI/DC ;THE/DB -.0149 (0) (-.00536) (2.21)[.0665;2.22]<.000872>

THE/DA ;PSI/DP -.172 (.0319) (.170) (-.210) (.900)<.000176>
THE/DP ;PHI/DA -.00171 (0) (.0332) (3.04)[.955;1.74]<-.000524>
THE/DC ;PHI/DA .0236 (0) (.0147) (4.58)[.367;1.91]<.00578>

PSI/DA ;THE/DB -.0133 (-.00391) (.874) (1.51)[.192;2.48]<.000423>
PSI/DB ;PHI/DA .0553 (.0770)[.110;.128][.0701;2.38]<.000392>
XD/DB ;PHI/DA .524 (0) (.650)[.366;1.91][.0387;2.59]<10.9>

YD/DA ;THE/DB -.140 (-.00391) (1.03)[.351;1.93][-.0105;4.43]<.0413>
ZD/DB ;PHI/DA 1.34 (0) (-.00628)[.378;1.91][.148;2.59]<-.206>
XD/DC ;PHI/DA -.0328 (0) (4.07)[.365;1.92][-.193;5.06]<-12.5>

YD/DP ;THE/DB -.411 (0) (-.00403) (1.03) (1.66)[.272;2.20]<.0136>
ZD/DC ;PHI/DA -5.91 (0) (.0740)[.208;1.17][.374;1.89]<-2.93>

PHI/DA ;THE/DB ;PSI/DP .142 (-.00380) (.0600) (1.03)<-.334E-4>
PHI/DC ;THE/DB ;PSI/DP .0196 (-.00744) (.0553) (2.88)<-.232E-4>
THE/DC ;PHI/DA ;PSI/DP -.0372 (.0145) (.0599) (4.57)<-.000147>

PSI/DC ;PHI/DA ;THE/DB .00457 (0) (.0790) (-6.80)<-.00246>
XD/DB ;PHI/DA ;PSI/DP -.822 (.0600) (.855)[.0385;2.59]<-.283>
YD/DA ;THE/DB ;PSI/DP .239 (-.00382) (1.03)[.000124;4.23]<-.0169>

ZD/DC ;PHI/DA ;THE/DB .985 (0) (-.00322)[.369;1.89]<-.0109>
ZD/DC ;PHI/DA ;PSI/DP 9.29 (.0610) (.0736)[.213;1.36]<.0767>
XD/DC ;PHI/DA ;THE/DB -.0177 (0) (5.00)[.362;1.91]<-.324>

XD/DC ;PHI/DA ;PSI/DP .0514 (.0599) (4.11)[-.192;5.06]<.123>
YD/DP ;PHI/DA ;THE/DB -.122 (-.00380) (1.03) (2.59) (-2.63)<-.00126>
ZD/DB ;PHI/DA ;PSI/DP -2.11 (-.00642) (.0601)[.143;2.60]<.00549>

ZD/DC ;PHI/DA ;THE/DB ;PSI/DP -1.48 (-.00307) (.0602)<.000275>
XD/DC ;PHI/DA ;THE/DB ;PSI/DP .0279 (.0597) (4.95)<.00825>

TABLE V-5 CONCLUDED
UH-1H TRANSFER FUNCTION FACTORS

CASE 134 60 KT AUTOROTATION BAR ON

DENOMINATOR: (0) (.0181) (.586)[.222;.167][.523;1.55][.303;1.76][.383;2.18]<.0105>

CONTROL NUMERATORS:

PHI/DA .531 (0) (.333) (.583)[.227;.168][.351;1.62][.366;1.90]<.0272>
THE/DB -.170 (0) (-.00397) (.0181) (.333) (1.02)[.496;1.80][.343;2.06]<.575E-4>
PSI/DP -1.50 (.587)[.470;.132][.206;.168][.401;1.57][.426;2.01]<-.00432>

PHI/DB .0315 (0) (.0638) (-.0828) (.333) (.347)[.179;1.88][.938;3.64]<-.000899>
THE/DA .104 (0) (.0148) (-.0522) (.333) (.333) (.899)[.364;1.90]<-.289E-4>

PHI/DA ;THE/DB -.0901 (0) (-.00391) (.333) (.333) (1.03)[.366;1.90]<.000146>
PHI/DA ;PSI/DP -.833 (.0600) (.333) (.585)[.228;.168][.350;1.61]<-.000707>
THE/DB ;PSI/DP .256 (-.00402) (.333) (1.03)[.457;.132][.449;1.98]<-.238E-4>

PHI/DB ;PSI/DP -.0959 (-.121) (.333) (.333)[.981;.0781][.608;2.35]<.435E-4>
PHI/DP ;THE/DB -.0757 (0) (-.00403) (.333) (.392) (1.04) (-1.16) (1.44)<-.696E-4>
PHI/DC ;THE/DB -.0149 (0) (-.00541) (.333) (.345) (2.14)[.0796;2.21]<.970E-4>

THE/DA ;PSI/DP -.172 (.0319) (.170) (-.210) (.333) (.333) (.900)<.195E-4>
THE/DP ;PHI/DA -.00171 (0) (.0331) (.330) (.333) (2.95)[.962;1.78]<-.582E-4>
THE/DC ;PHI/DA .0236 (0) (.0147) (.333) (.333) (4.58)[.367;1.91]<.000642>

PSI/DA ;THE/DB -.0133 (-.00391) (.333) (.333) (.874) (1.51)[.192;2.48]<.470E-4>
PSI/DB ;PHI/DA .0553 (.0770) (.333) (.333)[.110;.128][.0701;2.38]<.435E-4>
XD/DB ;PHI/DA .524 (0) (.333) (.333) (.850)[.366;1.91][.0387;2.59]<1.21>

YD/DA ;THE/DB -.140 (-.00391) (.333) (.333) (1.03)[.351;1.93][-.0105;4.43]<.00459>
ZD/DB ;PHI/DA 1.34 (0) (-.00628) (.333) (.333)[.378;1.91][.144;2.59]<-.0229>
XD/DC ;PHI/DA -.0328 (0) (.333) (.382) (4.01)[.366;1.91][-.204;4.76]<-1.39>

YD/DP ;THE/DB -.348 (-.00402) (.179) (.333) (1.03) (1.87) (-1.91)[.222;2.75]<-.00233>
ZD/DC ;PHI/DA -5.91 (0) (.0882) (.193) (.333)[.207;1.65][.377;1.89]<-.326>

PHI/DA ;THE/DB ;PSI/DP .142 (-.00380) (.0600) (.333) (.333) (1.03)<-.371E-5>
PHI/DC ;THE/DB ;PSI/DP .0196 (-.00744) (.0553) (.333) (.333) (2.88)<-.257E-5>
THE/DC ;PHI/DA ;PSI/DP -.0372 (.0145) (.0599) (.333) (.333) (4.57)<-.164E-4>

PSI/DC ;PHI/DA ;THE/DB .00457 (0) (.0790) (.333) (.333) (-6.80)<-.000273>
XD/DB ;PHI/DA ;PSI/DP -.822 (.0600) (.333) (.333) (.855)[.0385;2.59]<-.0315>
YD/DA ;THE/DB ;PSI/DP .238 (-.00382) (.333) (.333) (1.03)[.000123;4.23]<-.00188>

ZD/DC ;PHI/DA ;THE/DB .945 (0) (-.00322) (.333) (.333)[.369;1.89]<-.00121>
ZD/DC ;PHI/DA ;PSI/DP -.929 (0) (.0607) (.0888) (.191) (.333)[.215;1.64]<-.000852>
XD/DC ;PHI/DA ;THE/DB -.0177 (0) (.333) (.333) (5.00)[.362;1.91]<-.0360>

XD/DC ;PHI/DA ;PSI/DP .0514 (.0599) (.333) (.381) (4.05)[-.203;4.76]<.0359>
YD/DP ;PHI/DA ;THE/DB -.122 (-.00380) (.333) (.333) (1.03) (2.59) (-2.63)<-.000362>
ZD/DB ;PHI/DA ;PSI/DP -2.11 (-.00642) (.0601) (.333) (.333)[.143;2.60]<.000610>

ZD/DC ;PHI/DA ;THE/DB ;PSI/DP -1.48 (-.00307) (.0602) (.333) (.333)<.305E-4>
XD/DC ;PHI/DA ;THE/DB ;PSI/DP .0279 (.0597) (.333) (.333) (4.95)<.000917>

MICROFILMED FROM
BEST AVAILABLE COPY

SECTION VI

SIKORSKY CH-53D

The CH-53D is a twin-turbine heavy assault transport helicopter. With a maximum gross weight of 19050 kg (42,000 lb), it carries a crew of three and up to 64 troops. The rotor system consists of a six-bladed, fully-articulated main rotor and is powered by two T64-GE-412 (or -413) engines rated at 3695 (or 3925) shaft horsepower.

The vehicle features a highly augmented flight control system as shown in Fig. VI-2. The mechanical control system is powered by hydraulic actuators. Collective control is cross fed to both the lateral cyclic and tail rotor controls to offset roll and yaw moments produced by collective pitch changes. An electronic automatic flight control system (AFCS) is normally utilized which includes command augmentation of the longitudinal cyclic control, rate damping about all axes, attitude and heading stabilization, and turn coordination at airspeeds above 60 kt.

The data presented here were produced by the manufacturer's GENHEL computer program. Transfer function data are limited to a controls-fixed condition; control forces are not modeled. The CH-53D, however, employs automatic control force trim functions for the lateral cyclic stick and for the rudder pedals. These automatic trim devices effectively provide additional feedback loops if control inputs are regarded on a force basis.

All the basic data in Ref. 6 were transcribed except for the elements of a linearized propulsion system model and its respective stability derivatives. Miscellaneous descriptive data shown in Table VI-1 were obtained from the NATOPS Flight Manual (Ref. 13).

TABLE VI-1

CH-53D DESCRIPTIVE DATA

MAIN ROTOR

- Blades 6
- Radius 11.009 m (36.118 ft)
- Chord 0.660 m (2.167 ft)
- Section NACA 0011 Mod
- Hub type Articulated
- Twist -4.1 deg*
- Pitch flap coupling (δ_3) Zero
- Shaft tilt 5 deg forward
- Design rpm 185 rpm = 100% N_r, max rpm = 125% N_r*
- Hub location FS 336.413, WL 257*
- Blade flapping inertia 5486 kg-m^2 (4046 slug-ft^2)

TAIL ROTOR

- Blades 4
- Radius 2.44 m (8 ft)
- Chord 0.391 m (1.284 ft)
- Twist -8 deg*
- RPM ratio 4.30
- Hub location FS 870.25, WL 269., BL -33.*

HORIZONTAL STABILIZER

- Area 3.71 m^2 (40.0 ft^2)
- Aspect ratio 2.59
- Center of pressure location FS 846, BL 60.9, WL 290.0
- Dihedral 5 deg
- Incidence 3 deg

VERTICAL STABILIZER LOCATION

- Area 3.252 m^2 (35.0 ft^2)
- Aspect ratio 1.70
- Center of pressure location FS 812.5, WL 228.9

---

* From Ref. 12.

* From Ref. 13.

* Manufacturer's fuselage reference system.

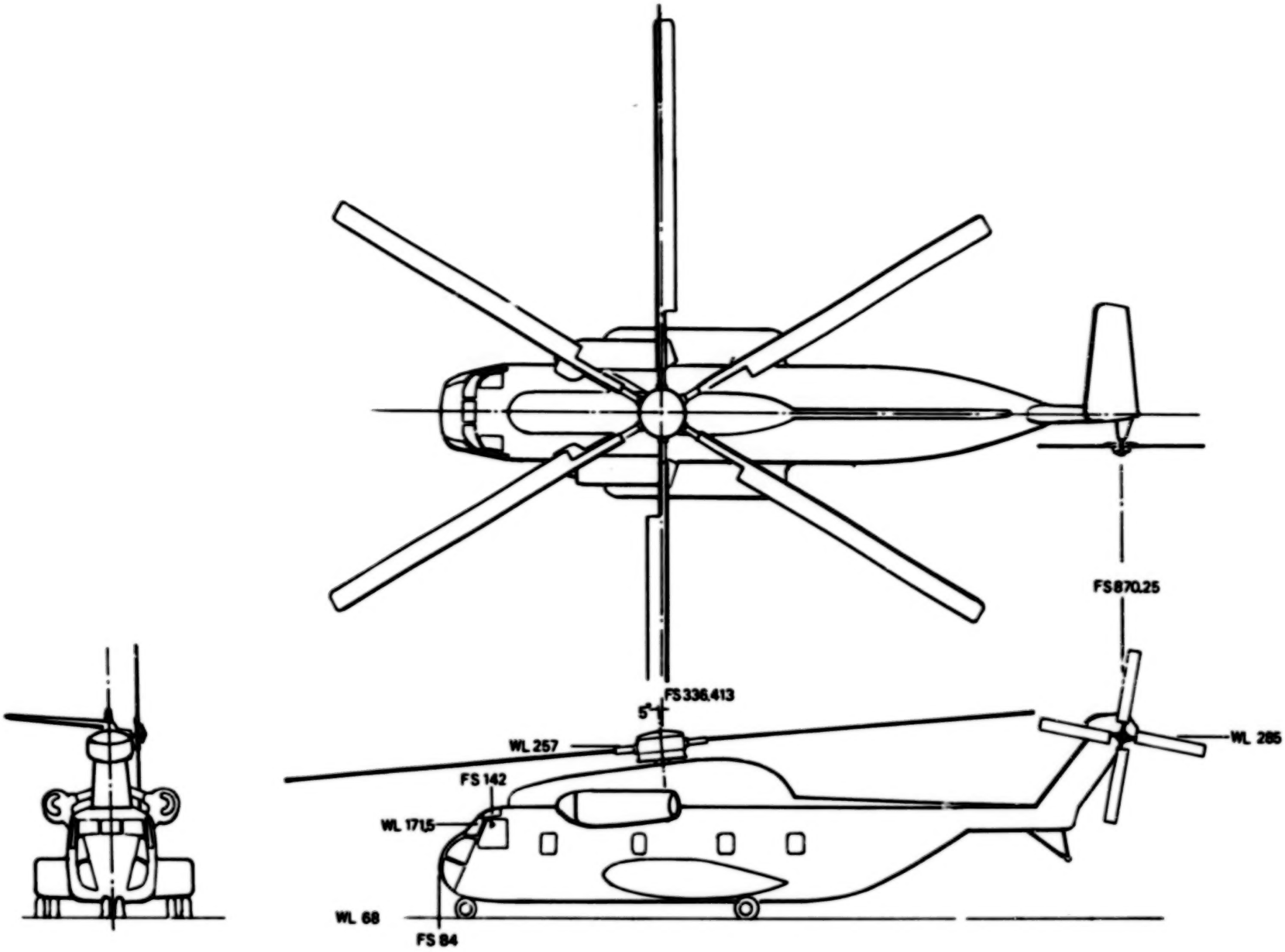

Figure VI-1. CH-53D General Arrangement

a. Block Diagram

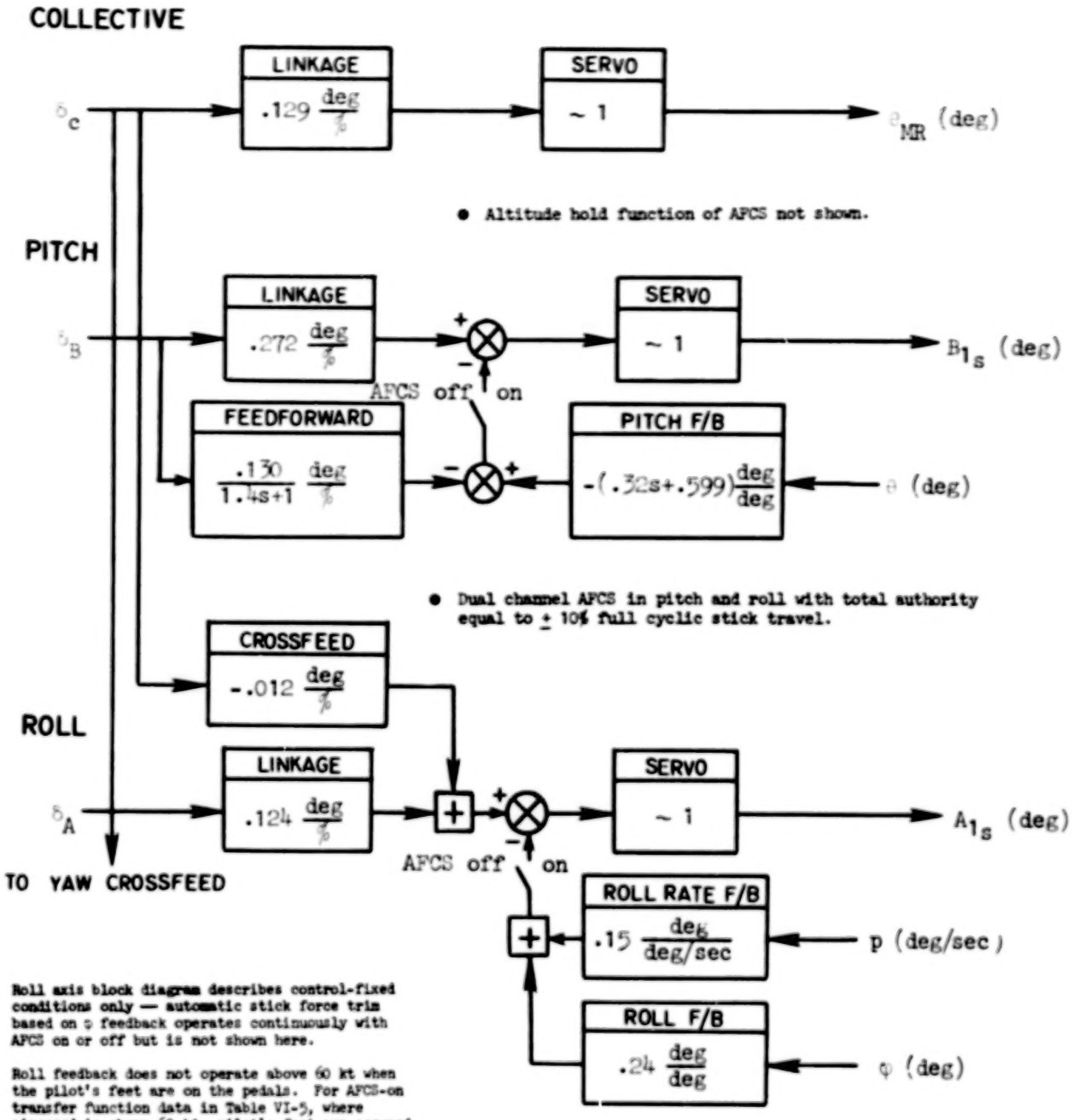

Figure VI-2. CH-53D Control System Description

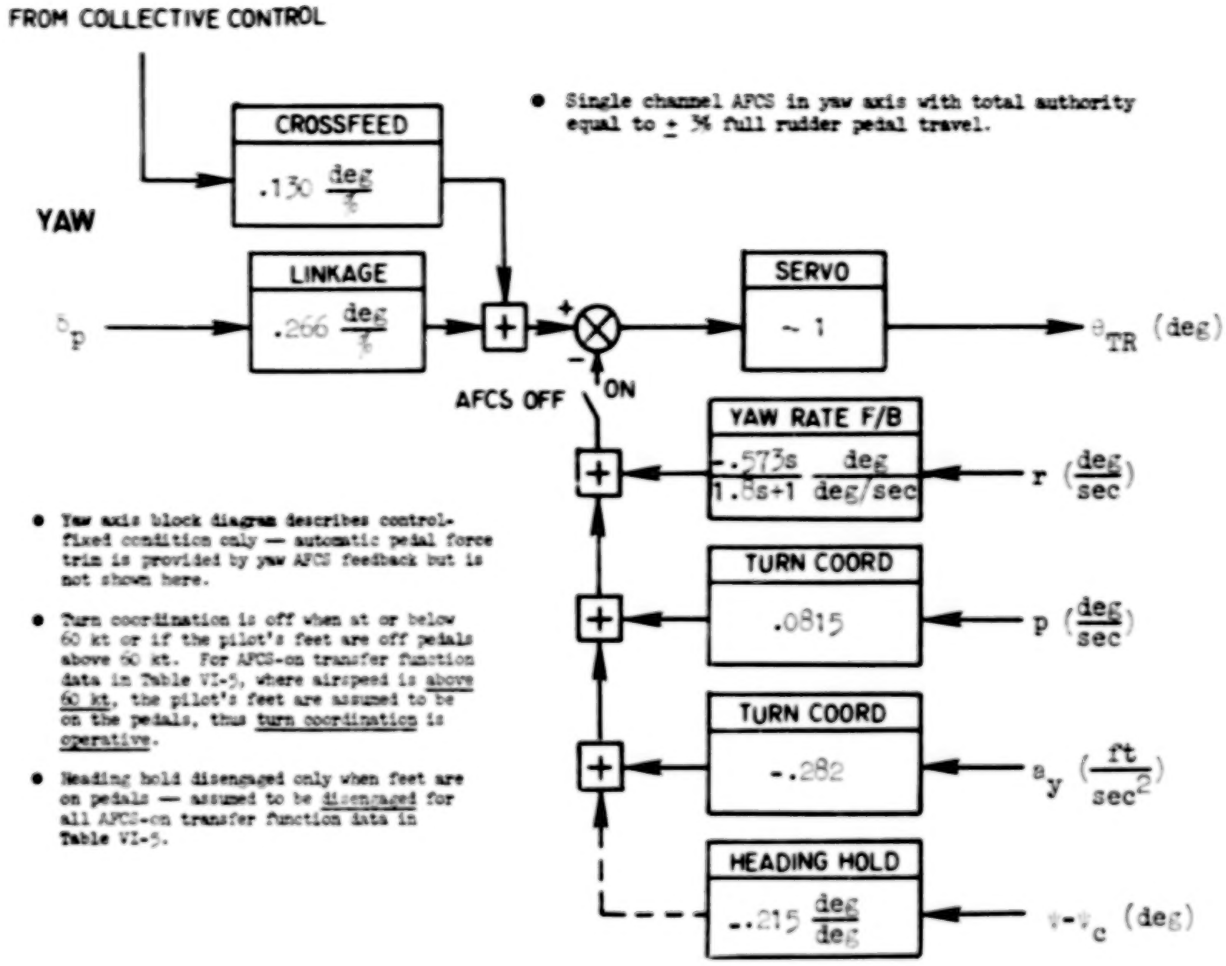

b. Cockpit Controller Characteristics

CONTROLLER	100% FULL TRAVEL cm (in)
Collective, δ_c	25.4 (10)
Longitudinal Cyclic, δ_B	31.04 (12.22)
Lateral Cyclic, δ_A	22.61 (8.9)
Pedal, δ_p	12.95 (5.10)

Figure VI-2 (Concluded)

a. Loading Envelope

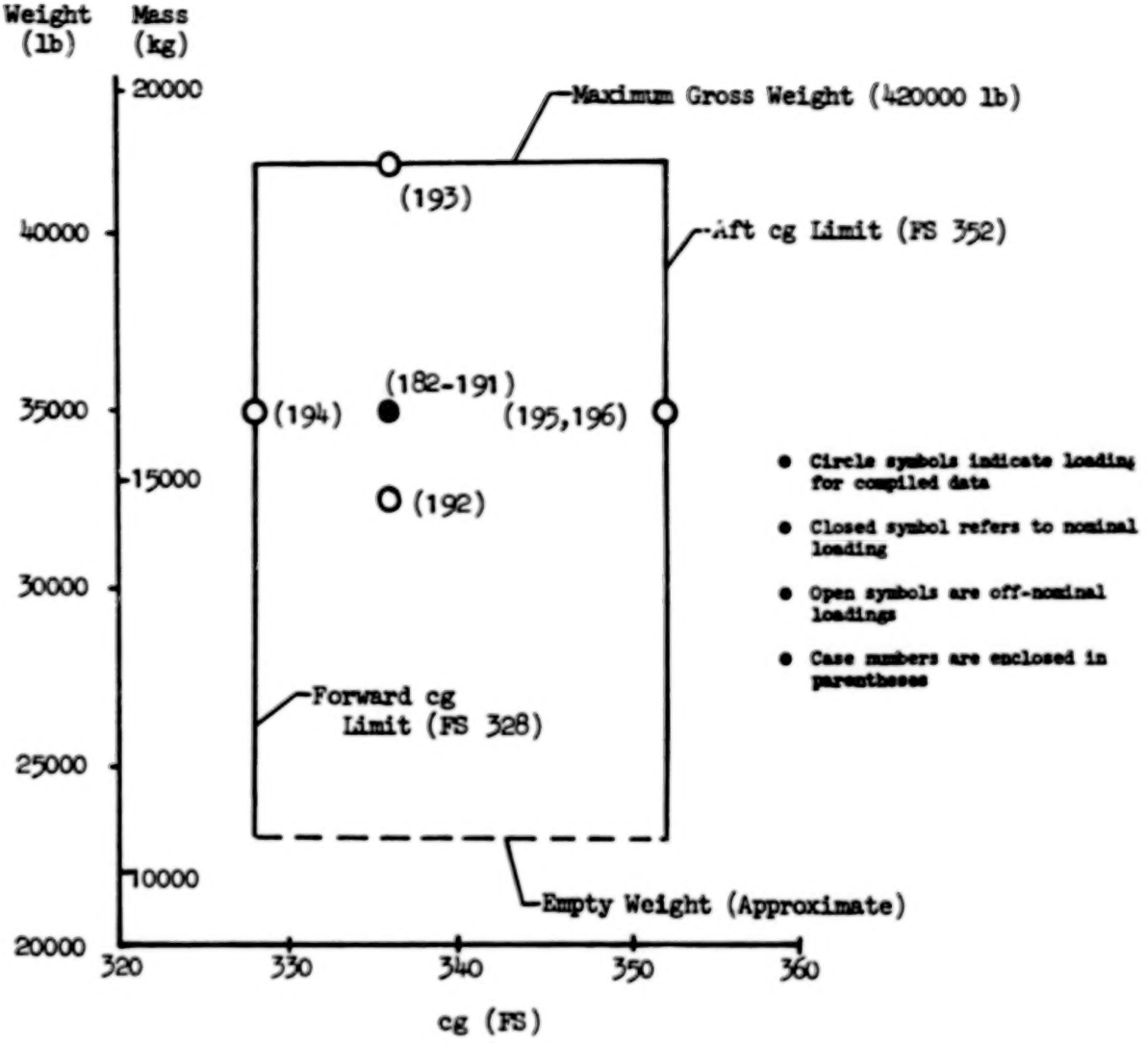

b. Moments of Inertia for Compiled Data

CONDITION	MASS (WEIGHT) kg (lb)	cg FS	cg WL	I_x	I_y	I_z	I_{xz}
				kg-m^2 (slug-ft^2)			
Nominal Weight, mid cg	15876 (35000)	336	163.8	48967(36116)	259611(191479)	242965(179202)	20050(14788)
..., Forward cg	↓	328	↓	↓	258175(190420)	241025(177771)	23850(17591)
..., Aft cg	↓	352	↓	↓	262481(193596)	246848(182066)	12450(9183)
Light Weight	15195 (33500)	336	165.5	47658(35151)	254182(187475)	237698(175317)	20051(14789)
Heavy Weight	19051 (42000)	336	155.7	55076(40622)	284943(210163)	267549(197334)	20047(14786)

• Inertias were calculated by interpolating data given in Ref. 6 over weight and cg ranges.

Figure VI-3. CH-53D Loading Summary

TABLE VI-2

CH-53D INDEX OF FLIGHT CONDITIONS
FOR DERIVATIVES AND TRANSFER FUNCTION FACTORS

CASE	CONDITION	AIRSPEED kt	VERTICAL VELOCITY m/sec(ft/sec)	ALTITUDE m(ft)	MASS(WEIGHT) kg(lb)	cg FS	REPORT PAGE NUMBER		
							DERIVATIVES SI(EB)	TRANSFER FUNCTIONS	
								AFCS OFF	AFCS ON
182	Airspeed Variation	Hover	Zero	610(2000)	15876(35000)	336	310(316)	322*	324*
183		20						330*	332*
184		30							
185		40					311(317)	325	327
186		60						340*	342*
187		80						348	349
188		100					312(318)	350	351
189		120						352	353
190		140						356	356
191		150					313(319)	358	357
192	Reduced Weight				13199(33500)				
193	Max Gross Weight				13651(+2000)				
194	Fwd cg				15876(35000)	328	314(320)		
195	Aft cg	100				352			
196		150				360			
197	Operation at Altitude	100		1524(5000)		336	315(321)		
198	Reduced Rotor rpm	120							
	N_r = 99%								
199	Increased Rotor rpm	120							
	N_r = 104%								

TABLE VI-3
CH-53D STABILITY AND CONTROL DERIVATIVES -- SI UNITS
(BODY-FIXED FRL AXIS SYSTEM)

CASE 182 0 KT LEVEL FLIGHT 610 M 15876 KG MID CG

PHI	THETA	PSI	ALPHA	BETA	GAMMA	OMG	R1S	A1S	OTR
-3.14	5.64	-0.31	5.65	0.00	0.00	14.02	0.22	-0.89	19.56

XDOT	ZDOT	DD	YD	WD	VTO
0.00	0.00	0.00	0.00	0.00	0.00

	U	W	Q	V	P	R	DC	DB	DA	DP
X	-0.0917	0.0240	0.2652	0.0029	-0.8595	-0.1152	0.0755	0.1823	0.0117	-0.0001
Z	0.0168	-0.2993	0.0981	-0.1660	-0.0924	1.0942	-0.7661	0.0163	0.0004	-0.0001
M	0.0196	-0.0058	-0.4990	0.0066	0.1970	0.0063	0.0007	-0.0705	-0.0030	0.0007
Y	0.0030	-0.0025	-0.8382	-0.1450	-0.5852	0.3505	0.0117	-0.0217	0.1159	0.1465
L'	0.0087	-0.0010	-0.9370	-0.1017	-1.9000	0.2100	-0.0149	-0.0309	0.2029	0.0904
N'	-0.0028	0.0011	0.0870	0.0089	-0.1000	-0.3400	0.0327	-0.0019	0.0120	-0.1385

CASE 183 20 KT LEVEL FLIGHT 610 M 15876 KG MID CG

PHI	THETA	PSI	ALPHA	BETA	GAMMA	OMG	R1S	A1S	OTR
-2.65	6.55	-0.21	6.55	0.00	0.00	13.39	1.87	-0.93	16.73

XDOT	ZDOT	DD	YD	WD	VTO
10.29	0.00	10.26	-0.00	0.82	10.29

	U	W	Q	V	P	R	DC	DB	DA	DP
X	-0.0216	0.0336	0.5671	0.0012	-0.8016	-0.0972	0.0490	0.1767	0.0104	-0.0010
Z	-0.1630	-0.3750	-0.0913	-0.0167	-0.2627	1.0028	-0.7519	0.0915	0.0117	0.0002
M	0.0052	-0.0052	-0.3600	-0.0037	0.2030	0.0030	0.0114	-0.0736	-0.0033	0.0006
Y	0.0377	0.0033*	-1.0420	-0.1780	-0.6031	0.4296	0.0046	-0.0279	0.1138	0.1379
L'	0.0301	0.0045	-1.0700	-0.1161	-1.5200	0.2420	-0.0106	-0.0359	0.2011	0.0850
N'	-0.0351	-0.0070	0.0923	0.0338	-0.1360	-0.4770	0.0362	0.0063	0.0126	-0.1302

CASE 184 30 KT LEVEL FLIGHT 610 M 15876 KG MID CG

PHI	THETA	PSI	ALPHA	BETA	GAMMA	OMG	R1S	A1S	OTR
-2.27	3.61	-0.14	3.61	0.00	0.00	12.64	1.27	-0.96	14.13

XDOT	ZDOT	DD	YD	WD	VTO
15.43	0.00	15.40	-0.00	0.97	15.43

	U	W	Q	V	P	R	DC	DB	DA	DP
X	-0.0160	0.0430	0.5671	-0.0001	-0.7620	-0.0583	0.0361	0.1643	0.0082	-0.0066
Z	-0.1780	-0.4780	0.0019	-0.0140	-0.3084	0.9818	-0.7529	0.1477	0.0176	0.0010
M	0.0213	-0.0140	-0.3250	-0.0024	0.1850	-0.0109	0.0241	-0.0693	-0.0031	0.0010
Y	0.0035	-0.0073	-0.9510	-0.1250	-0.6999	0.4189	0.0144	-0.0246	0.1069	0.1254
L'	0.0081	-0.0031	-1.0000	-0.0971	-1.5400	0.2610	0.0039	-0.0335	0.1990	0.0872
N'	-0.0082	-0.0016	0.1010	0.0277	-0.0999	-0.4970	0.0355	0.0011	0.0122	-0.1329

*This derivative was transcribed accurately from the original source but exceeds the usual range of values and should be used with due caution.

TABLE VI-3 CONTINUED
CH-53D STABILITY AND CONTROL DERIVATIVES -- SI UNITS
(BODY-FIXED FRL AXIS SYSTEM)

CASE 185 60 KT LEVEL FLIGHT 610 M 15876 KG MID CG

PHI	THETA	PSI	ALPHA	BETA	GAMMA	GRD	B1S	A1S	GTR
-1.88	2.69	-0.09	2.69	0.00	0.00	11.86	0.36	-1.01	12.71

XDOT	ZDOT	UO	VO	WO	VTO
20.58	0.00	20.56	-0.00	0.97	20.58

	U	W	Q	V	P	R	DC	DB	DA	DP
X	-0.0152	0.0264	0.6279	0.0000	-0.7254	-0.0555	0.0128	0.1612	0.0087	-0.0012
Z	-0.1660	-0.5720	0.0403	-0.0121	-0.3962	0.9053	-0.7822	0.1976	0.0221	0.0001
M	0.0320	-0.0052	-0.3500	-0.0021	0.1800	0.0079	0.0091	-0.0678	-0.0029	0.0006
Y	0.0044	-0.0076	-0.8656	-0.0953	-0.7404	0.4474	0.0220	-0.0173	0.1079	0.1416
L'	0.0088	0.0002	-0.9640	-0.0577	-1.5600	0.2550	0.0069	-0.0312	0.1964	0.0872
N'	-0.0066	-0.0039	0.1680	0.0254	-0.0939	-0.5020	0.0105	0.0017	0.0113	-0.1342

CASE 186 60 KT LEVEL FLIGHT 610 M 15876 KG MID CG

PHI	THETA	PSI	ALPHA	BETA	GAMMA	GRD	B1S	A1S	GTR
-1.81	2.84	-0.06	2.84	0.00	0.00	11.21	1.59	-1.19	10.97

XDOT	ZDOT	UO	VO	WO	VTO
30.87	0.00	30.84	-0.00	1.31	30.87

	U	W	Q	V	P	R	DC	DB	DA	DP
X	-0.0295	0.0295	-0.6013	-0.0006	-0.6828	-0.0954	0.0129	0.1623	0.0830	-0.0155
Z	-0.0623	-0.6570	-0.2002	-0.0148	-0.6309	0.9876	-0.9235	0.3190	0.0385	0.0042
M	0.0074	0.0022	-0.4510	-0.0030	0.1800	0.0155	0.0122	-0.0685	-0.0027	0.0012
Y	0.0058	-0.0090	-0.7925	-0.1020	-0.7780	0.4958	0.0193	-0.0164	0.1035	0.1475
L'	0.0085	0.0036	-0.9460	-0.0564	-1.5800	0.2930	0.0174	-0.0310	0.1940	0.0943
N'	-0.0071	-0.0079	0.1150	0.0268	-0.0826	-0.5610	0.0033	0.0050	0.0110	-0.1421

CASE 187 80 KT LEVEL FLIGHT 610 M 15876 KG MID CG

PHI	THETA	PSI	ALPHA	BETA	GAMMA	GRD	B1S	A1S	GTR
-1.31	1.67	-0.03	1.67	0.00	0.00	11.32	2.54	-0.99	10.25

XDOT	ZDOT	UO	VO	WO	VTO
41.16	0.00	41.14	-0.00	1.06	41.16

	U	W	Q	V	P	R	DC	DB	DA	DP
X	-0.0364	0.0381	0.6293	0.0004	-0.6462	-0.0881	0.0084	0.1391	0.0842	-0.0069
Z	-0.0162	-0.7370	-0.4512	-0.0188	-0.9081	1.0698	-1.0203	0.4508	0.0550	0.0030
M	0.0073	0.0069	-0.5140	-0.0041	0.1810	0.0160	0.0194	-0.0705	-0.0029	0.0011
Y	0.0060	-0.0076	-0.7711	-0.1200	-0.7821	0.5731	0.0268	-0.0119	0.1040	0.1699
L'	0.0075	0.0071	-0.9490	-0.0621	-1.5700	0.3160	0.0184	-0.0376	0.1928	0.1040
N'	-0.0056	-0.0105	0.1190	0.0262	-0.0784	-0.6450	-0.0054	0.0071	0.0111	-0.1589

TABLE VI-3 CONTINUED
CH-53D STABILITY AND CONTROL DERIVATIVES -- SI UNITS
(BODY-FIXED FRL AXIS SYSTEM)

CASE 188 100 KT LEVEL FLIGHT 610 M 15876 KG MID CG

PHI	THETA	PSI	ALPHA	BETA	GAMMA	OMB	B1S	A1S	OTR
-2.29	0.38	1.99	0.30	-2.00	0.00	12.03	3.87	-1.35	9.65

XDOT	ZDOT	UO	VO	WO	VTO
51.44	0.00	51.41	-1.80	0.27	51.84

	U	W	Q	V	P	R	DC	DB	DA	DP
X	-0.0400	0.0109	0.5126	-0.0042	-0.6370	-0.1096	-0.0031	0.1302	0.0032	-0.0122
Z	0.0143	-0.7920	-0.5717	-0.0243	-1.2285	1.1796	-1.1015	0.5967	0.0621	0.0072
M	0.0072	0.0091	-0.5580	-0.0056	0.1910	0.0183	0.0273	-0.0723	-0.0029	0.0022
Y	0.0094	-0.0076	-0.7864	-0.1810	-0.6928	0.5717	0.0323	-0.0113	0.1033	0.1842
L'	0.0076	0.0136	-0.9630	-0.1656	-1.5300	0.3400	0.0476	-0.0448	0.1922	0.1137
N'	-0.0051	-0.0077	0.1390	0.0279	-0.0701	-0.7220	-0.0091	0.0094	0.0114	-0.1711

CASE 189 120 KT LEVEL FLIGHT 610 M 15876 KG MID CG

PHI	THETA	PSI	ALPHA	BETA	GAMMA	OMB	B1S	A1S	OTR
-3.01	-1.10	2.06	-1.21	-2.00	0.00	13.34	5.42	-1.66	9.99

XDOT	ZDOT	UO	VO	WO	VTO
61.73	0.00	61.68	-2.15	-1.30	61.73

	U	W	Q	V	P	R	DC	DB	DA	DP
X	-0.0469	0.0258	0.4686	-0.0053	-0.6401	-0.1133	-0.0158	0.1326	0.0049	-0.0087
Z	0.0353	-0.8300	-0.9049	-0.0337	-1.5571	1.3228	-1.1635	0.7272	0.0797	0.0102
M	0.0076	0.0122	-0.6060	-0.0064	0.2060	0.0193	0.0364	-0.0760	-0.0030	0.0038
Y	0.0113	-0.0067	-0.8443	-0.1630	-0.6362	0.6001	0.0367	-0.0128	0.1039	0.1969
L'	0.0083	0.0198	-1.0200	-0.0719	-1.4800	0.3490	0.0636	-0.0549	0.1926	0.1230
N'	-0.0059	-0.0085	0.1840	0.0295	-0.0676	-0.8060	-0.0091	0.0098	0.0113	-0.1837

CASE 193 140 KT LEVEL FLIGHT 610 M 15876 KG MID CG

PHI	THETA	PSI	ALPHA	BETA	GAMMA	OMB	B1S	A1S	OTR
-3.88	-2.89	2.20	-3.01	-2.00	0.00	15.45	7.58	-2.16	10.06

XDOT	ZDOT	UO	VO	WO	VTO
72.02	0.00	71.88	-2.51	-3.81	72.02

	U	W	Q	V	P	R	DC	DB	DA	DP
X	-0.0540	0.0162	0.4019	-0.0055	-0.6619	-0.0773	-0.0289	0.1596	0.0143	0.0188
Z	0.0496	-0.9610	-1.3773	-0.0457	-1.9070	1.4630	-1.1746	0.8251	0.0955	0.0068
M	0.0075	0.0106	-0.6560	-0.0069	0.2340	0.0178	0.0490	-0.0816	-0.0036	0.0048
Y	0.0137	-0.0037	-0.9418	-0.1860	-0.6933	0.6859	0.0451	-0.0146	0.1078	0.2112
L'	0.0098	0.0287	-1.1000	-0.0781	-1.6300	0.3690	0.0860	-0.0691	0.1944	0.1320
N'	-0.0070	0.0014	0.2570	0.0319	-0.0771	-0.9040	-0.0081	0.0087	0.0109	-0.1977

MICROFILMED FROM
BEST AVAILABLE COPY

TABLE VI-3 CONTINUED
CH-53D STABILITY AND CONTROL DERIVATIVES -- SI UNITS
(BODY-FIXED FRL AXIS SYSTEM)

CASE 191 150 KT LEVEL FLIGHT 610 M 15876 KG MID CG

PHI	THETA	PSI	ALPHA	BETA	GAMMA	OMR	B1S	A1S	OTR
-0.88	-3.85	2.30	-4.02	-2.00	0.00	16.83	6.97	-2.50	11.52

XDOT	ZDOT	UO	VO	WO	VTO
77.17	0.00	76.93	-2.69	-5.40	77.17

	U	W	Q	V	P	R	DC	DB	DA	DP
X	-0.0601	0.0069	0.4381	-0.0050	-0.6328	-0.0684	-0.0421	0.1766	0.0179	0.0265
Z	0.0578	-0.8530	-1.7056	-0.0562	-2.0896	1.5301	-1.1607	0.8447	0.1003	-0.0102
M	0.0081	0.0162	-0.7020	-0.0084	0.2440	0.0123	0.0512	-0.0905	-0.0055	-0.0003
Y	0.0154	-0.0014	-0.9997	-0.1980	-0.4229	0.6693	0.0500	-0.0149	0.1119	0.2253
L'	0.0109	0.0341	-1.1790	-0.0823	-1.6200	0.3500	0.0943	-0.0783	0.1965	0.1370
N'	-0.0081	0.0002	0.2600	0.0328	-0.0997	-0.9750	-0.0081	0.0041	0.0088	-0.2120

CASE 192 100 KT LEVEL FLIGHT 610 M 15195 KG MID CG

PHI	THETA	PSI	ALPHA	BETA	GAMMA	OMR	B1S	A1S	OTR
-2.62	0.31	1.99	0.23	-2.00	0.00	11.80	3.73	-1.29	9.48

XDOT	ZDOT	UO	VO	WO	VTO
51.44	0.00	51.41	-1.80	0.20	51.44

	U	W	Q	V	P	R	DC	DB	DA	DP
X	-0.0007	0.0366	0.5622	-0.0032	-0.6218	-0.1005	0.0094	0.1320	0.0061	-0.0016
Z	0.0170	-0.8360	-0.6025	-0.0251	-1.2742	1.1887	-1.1559	0.6219	0.0625	0.0014
M	0.0068	0.0082	-0.5510	-0.0057	0.1850	0.0167	0.0252	-0.0718	-0.0032	0.0009
Y	0.0095	-0.0082	-0.7833	-0.1460	-0.7359	0.6025	0.0331	-0.0111	0.1038	0.1925
L'	0.0070	0.0127	-0.9350	-0.0680	-1.4900	0.3410	0.0861	-0.0668	0.1890	0.1137
N'	-0.0048	-0.0066	0.1260	0.0278	-0.0672	-0.7220	-0.0105	0.0068	0.0104	-0.1747

CASE 193 100 KT LEVEL FLIGHT 610 M 19051 KG MID CG

PHI	THETA	PSI	ALPHA	BETA	GAMMA	OMR	B1S	A1S	OTR
-1.98	0.93	1.97	0.86	-2.00	0.00	13.08	4.55	-1.57	10.34

XDOT	ZDOT	UO	VO	WO	VTO
51.44	0.00	51.41	-1.80	0.77	51.44

	U	W	Q	V	P	R	DC	DB	DA	DP
X	-0.0383	0.0165	0.6767	-0.0032	-0.6492	-0.0944	-0.0223	0.1471	0.0056	-0.0019
Z	0.0057	-0.6320	-0.6846	-0.0239	-1.0700	1.1003	-0.8661	0.4718	0.0520	0.0023
M	0.0091	0.0117	-0.6110	-0.0053	0.2150	0.0186	0.0120	-0.0798	-0.0031	0.0010
Y	0.0092	-0.0049	-0.8077	-0.1240	-0.8007	0.4752	0.0289	-0.0116	0.1012	0.1585
L'	0.0101	0.0160	-1.1200	-0.0076	-1.7400	0.3160	0.0512	-0.0476	0.2042	0.1144
N'	-0.0070	-0.0151	0.1960	0.0272	-0.1070	-0.7190	-0.0119	0.0140	0.0111	-0.1751

TABLE VI-3 CONTINUED
CH-53D STABILITY AND CONTROL DERIVATIVES -- SI UNITS
(BODY-FIXED FRL AXIS SYSTEM)

CASE 194 100 KT LEVEL FLIGHT 610 M 15876 KG FWD CG

PHI	THETA	PSI	ALPHA	BETA	GAMMA	QRR	RIS	AIS	QTR
-2.23	-1.47	2.06	-1.55	-2.00	0.00	12.13	2.20	-1.56	9.57

XDOT	ZDOT	UO	VO	WO	VTO
51.44	0.00	51.39	-1.80	-1.39	51.44

	U	W	Q	V	P	R	DC	DB	DA	DP
X	-0.0396	0.0088	0.5030	-0.0041	-0.6767	-0.0548	-0.0351	0.1561	0.0079	-0.0022
Z	-0.0066	-0.8100	-0.7061	-0.0229	-1.1340	1.2192	-1.0928	0.5818	0.0605	0.0019
M	0.0072	-0.0001	-0.5650	-0.0059	0.1810	0.0211	0.0181	-0.0684	-0.0027	0.0010
Y	0.0090	-0.0093	-0.7955	-0.1430	-0.7225	0.5842	0.0295	-0.0121	0.1037	0.1807
L'	0.0086	0.0138	-0.9770	-0.0646	-1.5400	0.3430	0.0464	-0.0447	0.1925	0.1134
N'	-0.0057	-0.0083	0.2580	0.0320	-0.0626	-0.7470	-0.0114	0.0089	0.0086	-0.1776

CASE 195 100 KT LEVEL FLIGHT 610 M 15876 KG APT CG

PHI	THETA	PSI	ALPHA	BETA	GAMMA	QRR	RIS	AIS	QTR
-2.09	0.03	1.83	3.95	-2.00	0.00	11.90	7.27	-0.95	9.90

XDOT	ZDOT	UO	VO	WO	VTO
51.44	0.00	51.29	-1.80	3.58	51.44

	U	W	Q	V	P	R	DC	DB	DA	DP
X	-0.0456	0.0749	0.5489	-0.0037	-0.5456	-0.2041	0.0672	0.0823	-0.0038	-0.0242
Z	0.0530	-0.7920	-0.3286	-0.0268	-1.4022	1.0759	-1.0975	0.6032	0.0650	0.0159
M	0.0058	0.0237	-0.5390	-0.0047	0.2180	0.0162	0.0865	-0.0798	-0.0030	0.0058
Y	0.0099	-0.0037	-0.7559	-0.1380	-0.6281	0.5724	0.0890	-0.0018	0.1079	0.2115
L'	0.0054	0.0106	-0.9440	-0.0663	-1.4800	0.3310	0.0505	-0.0466	0.1904	0.1168
N'	-0.0042	-0.0066	-0.0948*	0.0210	-0.0826	-0.6650	-0.0027	0.0116	0.0175	-0.1586

CASE 196 150 KT LEVEL FLIGHT 610 M 15876 KG APT CG

PHI	THETA	PSI	ALPHA	BETA	GAMMA	QRR	RIS	AIS	QTR
-0.68	-0.32	2.03	-0.69	-2.00	0.00	16.62	12.01	-2.04	11.71

XDOT	ZDOT	UO	VO	WO	VTO
77.17	0.00	77.12	-2.69	-0.66	77.17

	U	W	Q	V	P	R	DC	DB	DA	DP
X	-0.0652	0.0584	0.5050	0.0005	-0.6785	-0.1507	0.0600	0.1150	0.0183	0.0532
Z	0.0967	-0.8260	-1.3436	-0.0587	-2.1182	1.3594	-1.2189	0.8829	0.0967	-0.0230
M	0.0052	0.0128	-0.6570	-0.0063	0.2820	0.0038	0.0694	-0.1020	-0.0075	0.0006
Y	0.0152	0.0031*	-0.9327	-0.1910	-0.2987	0.6825	0.0657	-0.0090	0.1102	0.2454
L'	0.0651	0.0121	-1.1100	-0.0840	-1.3000	0.3510	0.0996	-0.0806	0.1912	0.1178
N'	-0.0068	0.0041	0.0021	0.0211	-0.0917	-0.9180	-0.0058	-0.0001	0.0129	-0.2038

*This derivative was transcribed accurately from the original source but exceeds the usual range of values and should be used with due caution.

TABLE VI-3 CONCLUDED
CH-53D STABILITY AND CONTROL DERIVATIVES -- SI UNITS
(BODY-FIXED FRL AXIS SYSTEM)

CASE 197 100 KT LEVEL FLIGHT 1524 M 15876 KG MID CG

PHI	THETA	PSI	ALPHA	BETA	GAMMA	OBR	B1S	A1S	OTR
-2.24	0.61	1.98	0.53	-2.00	0.00	12.50	8.17	-1.33	9.97

XDOT	ZDOT	U0	V0	W0	VTO
51.44	0.00	51.41	-1.80	0.48	51.43

	U	W	Q	V	P	R	DC	DB	DA	DP
X	-0.0389	0.0231	0.5717	-0.0042	-0.6170	-0.1096	-0.0164	0.1352	0.0019	-0.0150
Z	0.0105	-0.7150	-0.7226	-0.0225	-1.1644	1.1552	-0.9879	0.5394	0.0598	0.0095
M	0.0076	0.0103	-0.5810	-0.0050	0.1880	0.0189	0.0300	-0.0731	-0.0071	0.0028
Y	0.0092	-0.0060	-0.7925	-0.1330	-0.7239	0.5398	0.0321	-0.0104	0.1039	0.1740
L'	0.0078	0.0140	-0.9690	-0.0653	-1.6900	0.3140	0.0448	-0.0428	0.1926	0.1058
N'	-0.0055	-0.0093	0.1720	0.0260	-0.0859	-0.6740	-0.0076	0.0117	0.0116	-0.1571

CASE 198 120 KT LEVEL FLIGHT 1524 M 15876 KG MID CG

PHI	THETA	PSI	ALPHA	BETA	GAMMA	OBR	B1S	A1S	OTR
-2.65	-0.68	2.03	-0.73	-2.00	0.00	18.62	6.56	-1.75	10.85

XDOT	ZDOT	U0	V0	W0	VTO
61.73	0.00	61.69	-2.15	-0.79	61.73

	U	W	Q	V	P	R	DC	DB	DA	DP
X	-0.0458	0.0129	-0.7181	-0.0090	-0.6523	-0.1133	-0.0369	0.1516	0.0074	0.0038
Z	0.0299	-0.6960	-1.0964	-0.0330	-1.4717	1.2741	-0.9257	0.6056	0.0688	0.0009
M	0.0080	0.0185	-0.6500	-0.0058	0.2030	0.0204	0.0387	-0.0762	-0.0029	0.0013
Y	0.0112	-0.0017	-0.8839	-0.1510	-0.8035	0.5478	0.0398	-0.0103	0.1048	0.1791
L'	0.0090	-0.0221	-1.0400	-0.0719	-1.7100	0.2970	0.0602	-0.0517	0.1826	0.1073
N'	-0.0073	-0.0123	0.2340	0.0240	-0.1180	-0.7160	-0.0168	0.0147	0.0095	-0.1636

CASE 199 120 KT LEVEL FLIGHT 1524 M 15876 KG MID CG

PHI	THETA	PSI	ALPHA	BETA	GAMMA	OBR	B1S	A1S	OTR
-2.98	-0.74	2.08	-0.84	-2.00	0.00	13.03	5.13	-1.50	10.05

XDOT	ZDOT	U0	V0	W0	VTO
61.73	0.00	61.69	-2.15	-0.91	61.73

	U	W	Q	V	P	R	DC	DB	DA	DP
X	-0.0441	0.0255	0.6790	-0.0039	-0.6126	-0.0889	-0.0135	0.1363	0.0062	-0.0032
Z	0.0315	-0.7810	-1.0641	-0.0301	-1.4656	1.2416	-1.1347	0.6839	0.0760	0.0013
M	0.0074	0.0120	-0.6080	-0.0061	0.2000	0.0150	0.0366	-0.0805	-0.0038	0.0018
Y	0.0107	-0.0059	-0.8138	-0.1520	-0.6405	0.6071	0.0373	-0.0115	0.1044	0.1971
L'	0.0080	0.0181	-1.0300	-0.0702	-1.6200	0.3150	0.0594	-0.0532	0.2024	0.1212
N'	-0.0051	-0.0047	0.2010	0.0292	-0.0722	-0.7430	-0.0087	0.0078	0.0107	-0.1847

TABLE VI-4
CH-53D STABILITY AND CONTROL DERIVATIVES -- US UNITS
(BODY-FIXED FRL AXIS SYSTEM)

CASE 182 0 KT LEVEL FLIGHT 2000 FT 35000 LB MID CG

PHI	THETA	PSI	ALPHA	BETA	GAMMA	OMP	B1S	A1S	OTR
-3.14	5.64	-0.31	5.65	0.00	0.00	14.02	0.22	-0.89	19.56

XDOT	ZDOT	UO	VO	WO	VTO
0.00	0.00	0.00	0.00	0.00	0.00

	U	W	Q	V	P	R	DC	DP	DA	DR
X	-0.0917	0.0240	0.4700	0.0029	-2.5200	-0.3740	0.6293	1.5198	0.0978	-0.0076
Z	0.0168	-0.2980	0.2890	-0.1660	-0.3339	1.5930	-6.3639	0.1356	0.0031	-0.0009
M	0.0060	-0.0018	-0.4990	0.0020	0.1970	0.0061	0.0018	-0.1791	-0.0077	0.0017
Y	0.0030	-0.0025	-2.7530	-0.1450	-1.9200	1.1500	0.0977	-0.1810	0.9661	1.2210
L'	0.0027	-0.0003	-0.9375	-0.0110	-1.9000	0.2100	-0.0379	-0.0785	0.5158	0.2296
N'	-0.0008	0.0001	0.0870	0.0027	-0.1000	-0.3400	0.0831	-0.0047	0.0325	-0.3517

CASE 183 20 KT LEVEL FLIGHT 2000 FT 35000 LB MID CG

PHI	THETA	PSI	ALPHA	BETA	GAMMA	OMP	B1S	A1S	OTR
-2.65	4.55	-0.21	4.55	0.00	0.00	13.39	1.87	-0.93	16.73

XDOT	ZDOT	UO	VO	WO	VTO
33.76	0.00	33.65	-0.00	2.68	33.76

	U	W	Q	V	P	R	DC	DB	DA	DR
X	-0.0216	0.0336	1.8607	0.0012	-2.6100	-0.3190	0.4081	1.8557	0.0867	-0.0084
Z	-0.1430	-0.3750	-0.2996	-0.0167	-0.8650	3.2900	-6.2659	0.7622	0.0974	0.0014
M	0.0016	-0.0016	-0.3600	-0.0011	0.2030	0.0010	0.0289	-0.1869	-0.0086	0.0016
Y	0.0377	0.0011*	-1.4200	-0.1780	-1.9787	1.4096	0.0380	-0.2327	0.9687	1.1890
L'	0.0092	0.0014	-1.0700	-0.0354	-1.5200	0.2420	-0.0269	-0.0913	0.5108	0.2159
N'	-0.0107	-0.0021	0.0923	0.0103	-0.1340	-0.4770	0.0921	0.0159	0.0320	-0.3308

CASE 184 30 KT LEVEL FLIGHT 2000 FT 35000 LB MID CG

PHI	THETA	PSI	ALPHA	BETA	GAMMA	OMP	B1S	A1S	OTR
-2.27	3.61	-0.18	3.61	0.00	0.00	12.64	1.27	-0.96	16.13

XDOT	ZDOT	UO	VO	WO	VTO
50.61	0.00	50.53	-0.00	3.19	50.61

	U	W	Q	V	P	R	DC	DP	DA	DR
X	-0.0160	0.0434	1.8607	-0.0001	-2.5010	-0.1780	0.0512	1.1890	0.0685	-0.0558
Z	-0.1740	-0.4780	0.0073	-0.0140	-1.1300	3.0930	-6.2783	1.2307	0.1870	0.0087
M	0.0065	-0.0041	-0.1250	-0.0007	0.1850	-0.0109	0.0611	-0.1760	-0.0080	0.0025
Y	0.0035	-0.0071	-1.1200	-0.1250	-2.2927	1.4117	0.1201	-0.2218	0.8905	1.0851
L'	0.0025	-0.0009	-1.0400	-0.0268	-1.5400	0.2610	0.0099	-0.0800	0.5054	0.2218
N'	-0.0011	-0.0005	0.1010	0.0094	-0.0990	-0.4970	0.0191	0.0027	0.0310	-0.3171

*This derivative was transcribed accurately from the original source but exceeds the usual range of values and should be used with due caution.

TABLE VI-4 CONTINUED
CH-53D STABILITY AND CONTROL DERIVATIVES -- US UNITS
(BODY-FIXED FRL AXIS SYSTEM)

CASE 185 40 KT LEVEL FLIGHT 2000 FT 35000 LB MID CG

PHI	THETA	PSI	ALPHA	BETA	GAMMA	θBR	B1S	A1S	θTR
-1.88	2.69	-0.09	2.69	0.00	0.00	11.86	0.36	-1.01	12.71

XDOT	ZDOT	U0	V0	W0	VT0
67.51	0.00	67.44	-0.00	3.17	67.51

	U	W	Q	V	P	R	DC	DB	DA	DP
X	-0.0152	0.0264	2.0602	0.0000	-2.3800	-0.1920	0.1071	1.3434	0.0724	-0.0097
Z	-0.1660	-0.5720	0.1321	-0.0121	-1.3000	2.9700	-6.5181	1.6464	0.1839	0.0005
M	0.0098	-0.0016	-0.3500	-0.0006	0.1400	0.0079	0.0232	-0.1721	-0.0074	0.0016
Y	0.0044	-0.0076	-2.8400	-0.0953	-2.4292	1.4679	0.1887	-0.1445	0.8988	1.1800
L'	0.0027	0.0000	-0.9660	-0.0176	-1.5600	0.2650	0.0175	-0.0793	0.4989	0.2214
N'	-0.0020	-0.0012	0.1680	0.0077	-0.0939	-0.5020	0.0266	0.0044	0.0286	-0.3408

CASE 186 60 KT LEVEL FLIGHT 2000 FT 35000 LB MID CG

PHI	THETA	PSI	ALPHA	BETA	GAMMA	θBR	B1S	A1S	θTR
-1.41	2.44	-0.06	2.44	0.00	0.00	11.21	1.59	-0.97	10.97

XDOT	ZDOT	U0	V0	W0	VT0
101.27	0.00	101.18	-0.00	4.31	101.27

	U	W	Q	V	P	R	DC	DB	DA	DP
X	-0.0272	0.0295	1.9726	-0.0006	-2.2400	-0.3130	0.1075	1.1857	0.0247	-0.1294
Z	-0.0623	-0.6570	-0.6567	-0.0149	-2.0700	3.2400	-7.6958	2.6584	0.3207	0.0348
M	0.0022	0.0007	-0.4510	-0.0009	0.1900	0.0155	0.0311	-0.1740	-0.0070	0.0030
Y	0.0058	-0.0090	-2.6000	-0.1020	-2.5525	1.6267	0.1610	-0.1364	0.8627	1.2292
L'	0.0026	0.0011	-0.9460	-0.0172	-1.5800	0.2930	0.0443	-0.0839	0.4929	0.2396
N'	-0.0021	-0.0024	0.1150	0.0082	-0.0826	-0.5610	0.0084	0.0128	0.0300	-0.3608

CASE 187 80 KT LEVEL FLIGHT 2000 FT 35000 LB MID CG

PHI	THETA	PSI	ALPHA	BETA	GAMMA	θBR	B1S	A1S	θTR
-1.31	1.47	-0.03	1.47	0.00	0.00	11.32	2.54	-0.99	10.25

XDOT	ZDOT	U0	V0	W0	VT0
135.02	0.00	134.98	-0.00	3.46	135.02

	U	W	Q	V	P	R	DC	DB	DA	DP
X	-0.0344	0.0301	2.0648	0.0004	-2.1200	-0.2890	0.0696	1.1580	0.0349	-0.0571
Z	-0.0162	-0.7370	-1.4803	-0.0184	-2.9800	3.5100	-8.5029	3.7567	0.4585	0.0248
M	0.0022	0.0021	-0.5140	-0.0011	0.1810	0.0160	0.0494	-0.1791	-0.0071	0.0028
Y	0.0060	-0.0076	-2.5100	-0.1200	-2.5668	1.8303	0.2232	-0.0995	0.8670	1.4159
L'	0.0023	0.0022	-0.9490	-0.0196	-1.5700	0.3183	0.0772	-0.0956	0.4897	0.2642
N'	-0.0017	-0.0032	0.1100	0.0080	-0.0785	-0.6450	-0.0141	0.0179	0.0288	-0.4036

TABLE VI-4 CONTINUED
CH-53D STABILITY AND CONTROL DERIVATIVES -- US UNITS
(BODY-FIXED FRL AXIS SYSTEM)

CASE 188 100 KT LEVEL FLIGHT 2000 FT 35000 LB MID CG

PHI	THETA	PSI	ALPHA	BETA	GAMMA	θMR	B1S	A1S	θTR
-2.29	0.38	1.99	0.30	-2.00	0.00	12.03	3.87	-1.35	9.65

XDOT	ZDOT	UO	VO	WO	VTO
168.78	0.00	168.68	-5.89	0.89	168.78

	U	W	Q	V	P	R	DC	DB	DA	DP
X	-0.0400	0.0309	1.6819	-0.0042	-2.0903	-0.3596	-0.0259	1.0650	0.0264	-0.1021
Z	0.0143	-0.7920	-1.8758	-0.0243	-4.0304	1.8700	-9.1795	4.9726	0.5176	0.0604
M	0.0022	0.0028	-0.5580	-0.0017	0.1910	0.0183	0.0693	-0.1838	-0.0072	0.0057
Y	0.0094	-0.0076	-2.5800	-0.1410	-2.2729	1.8758	0.2694	-0.0944	0.8610	1.5353
L'	0.0023	0.0042	-0.9630	-0.0200	-1.5300	0.3400	0.1209	-0.1138	0.4881	0.2888
N'	-0.0016	-0.0024	0.1390	0.0085	-0.0701	-0.7220	-0.0231	0.0239	0.0291	-0.4346

CASE 189 120 KT LEVEL FLIGHT 2000 FT 35000 LB MID CG

PHI	THETA	PSI	ALPHA	BETA	GAMMA	θMR	B1S	A1S	θTR
-3.01	-1.10	2.06	-1.21	-2.00	0.00	13.34	5.42	-1.66	5.99

XDOT	ZDOT	UO	VO	WO	VTO
202.54	0.00	202.37	-7.07	-4.26	202.54

	U	W	Q	V	P	R	DC	DB	DA	DP
X	-0.0469	0.0258	1.5373	-0.0053	-2.1000	-0.3716	-0.1316	1.1049	0.0407	-0.0728
Z	0.0353	-0.9300	-2.9689	-0.0337	-5.1084	4.3400	-9.6961	6.0604	0.6643	0.0847
M	0.0023	0.0037	-0.6060	-0.0019	0.2060	0.0193	0.0923	-0.1931	-0.0076	0.0097
Y	0.0113	-0.0067	-2.7700	-0.1630	-2.0873	1.9689	0.3058	-0.1064	0.8658	1.6410
L'	0.0025	0.0060	-1.0200	-0.0219	-1.4800	0.3490	0.1615	-0.1395	0.4892	0.3125
N'	-0.0018	-0.0014	0.1840	0.0090	-0.0676	-0.8060	-0.0230	0.0249	0.0288	-0.4665

CASE 190 140 KT LEVEL FLIGHT 2000 FT 35000 LB MID CG

PHI	THETA	PSI	ALPHA	BETA	GAMMA	θMR	B1S	A1S	θTR
-3.88	-2.89	2.20	-3.03	-2.00	0.00	15.45	7.58	-2.16	10.86

XDOT	ZDOT	UO	VO	WO	VTO
236.29	0.00	235.82	-8.25	-12.49	236.29

	U	W	Q	V	P	R	DC	DB	DA	DP
X	-0.0540	0.0162	1.3186	-0.0055	-2.1700	-0.2535	-0.2406	1.3302	0.1199	0.1567
Z	0.0494	-0.9610	-4.5188	-0.0457	-6.2565	4.8900	-9.7882	6.8762	0.7958	0.0404
M	0.0021	0.0045	-0.6560	-0.0021	0.2340	0.0174	0.1219	-0.2117	-0.0091	0.0121
Y	0.0137	-0.0037	-3.0900	-0.1960	-1.6186	2.1188	0.3760	-0.1220	0.8983	1.7768
L'	0.0030	0.0083	-1.1900	-0.0239	-1.4300	0.3490	0.2134	-0.1760	0.4938	0.3353
N'	-0.0021	0.0064	0.2570	0.0097	-0.0771	-0.9060	-0.0295	0.0272	0.0276	-0.5021

MICROFILMED FROM
BEST AVAILABLE COPY

TABLE VI-4 CONTINUED
CH-53D STABILITY AND CONTROL DERIVATIVES -- US UNITS
(BODY-FIXED FRL AXIS SYSTEM)

CASE 191 150 KT LEVEL FLIGHT 2000 FT 15000 LB MID CG

PHI	THETA	PSI	ALPHA	BETA	GAMMA	ØMR	B1S	A1S	ØTR
-4.44	-3.85	2.30	-4.02	-2.00	0.00	16.93	8.97	-2.50	11.52

XDOT	ZDOT	U0	V0	W0	VT0
251.17	0.00	252.40	-8.84	-17.72	251.17

	U	W	Q	V	P	R	DC	DB	DA	DP
X	-0.0601	0.0069	1.4375	-0.0050	-2.2400	-0.2245	-0.3511	1.4720	0.1489	0.2205
Z	0.0578	-0.8530	-5.5959	-0.0562	-6.8555	5.0200	-9.6727	7.0394	0.8356	-0.0849
M	0.0025	0.0049	-0.7020	-0.0026	0.2440	0.0121	0.1301	-0.2300	-0.0140	-0.0008
Y	0.0154	-0.0014	-3.2800	-0.1980	-1.3075	2.1959	0.4165	-0.1239	0.9329	1.8779
L'	0.0033	0.0104	-1.1700	-0.0251	-1.4200	0.3500	0.2396	-0.1989	0.4992	0.3481
N'	-0.0025	0.0001	0.2600	0.0100	-0.0997	-0.9750	-0.0206	0.0104	0.0223	-0.5385

CASE 192 100 KT LEVEL FLIGHT 2000 FT 13500 LB MID CG

PHI	THETA	PSI	ALPHA	BETA	GAMMA	ØMR	B1S	A1S	ØTR
-2.42	0.31	1.99	0.21	-2.00	0.00	11.80	3.73	-1.29	9.48

XDOT	ZDOT	U0	V0	W0	VT0
168.78	0.00	168.68	-5.89	0.66	168.78

	U	W	Q	V	P	R	DC	DB	DA	DP
X	-0.0407	0.0366	1.8445	-0.0032	-2.0400	-0.3296	0.0754	1.0998	0.0506	-0.0136
Z	0.0170	-0.8360	-1.9769	-0.0251	-4.1804	3.9000	-9.6322	5.1824	0.5212	0.0117
M	0.0021	0.0025	-0.5510	-0.0017	0.1850	0.0167	0.0640	-0.1814	-0.0082	0.0021
Y	0.0095	-0.0082	-2.5700	-0.1460	-2.4145	1.9769	0.2756	-0.0928	0.8620	1.6046
L'	0.0021	0.0019	-0.9350	-0.0195	-1.4900	0.3410	0.1171	-0.1127	0.4800	0.2889
N'	-0.0015	-0.0020	0.1260	0.0085	-0.0672	-0.7220	-0.0267	0.0171	0.0264	-0.4437

CASE 193 100 KT LEVEL FLIGHT 2000 FT 42000 LB MID CG

PHI	THETA	PSI	ALPHA	BETA	GAMMA	ØMR	B1S	A1S	ØTR
-1.94	0.91	1.97	0.86	-2.00	0.00	11.08	4.55	-1.57	10.34

XDOT	ZDOT	U0	V0	W0	VT0
168.78	0.00	168.66	-5.89	2.51	168.78

	U	W	Q	V	P	R	DC	DB	DA	DP
X	-0.0383	0.0165	2.2201	-0.0032	-2.1300	-0.3096	-0.1862	1.2257	0.0465	-0.0159
Z	0.0057	-0.6120	-2.2592	-0.0239	-3.5104	3.6100	-7.2188	3.9315	0.4330	0.0191
M	0.0028	0.0036	-0.6110	-0.0016	0.2150	0.0196	0.0814	-0.2028	-0.0080	0.0026
Y	0.0092	-0.0049	-2.6500	-0.1243	-2.6271	1.5592	0.2407	-0.0963	0.8600	1.2875
L'	0.0031	0.0051	-1.1200	-0.0021	-1.7400	0.3160	0.1102	-0.1204	0.5219	0.2907
N'	-0.0021	-0.0046	0.1560	0.0081	-0.1070	-0.7330	-0.0191	0.0156	0.0281	-0.4445

TABLE VI-4 CONTINUED
CH-53D STABILITY AND CONTROL DERIVATIVES -- US UNITS
(BODY-FIXED FRL AXIS SYSTEM)

CASE 194 100 KT LEVEL FLIGHT 2000 FT 35000 LB FWD CG

PHI	THETA	PSI	ALPHA	BETA	GAMMA	QMR	B1S	A1S	QTR
-2.23	-1.47	2.06	-1.55	-2.00	0.00	12.13	2.20	-1.54	9.57

XDOT	ZDOT	U0	V0	W0	VT0
168.78	0.00	168.62	-5.89	-4.56	168.78

	U	W	Q	V	P	R	DC	DB	DA	DP
X	-0.0396	0.0088	1.6503	-0.0041	-2.2200	-0.1796	-0.2929	1.3006	0.0656	-0.0185
Z	-0.0066	-0.9100	-2.3165	-0.0229	-3.7204	4.0000	-9.1068	4.8483	0.5040	0.0160
M	0.0022	-0.0000	-0.5650	-0.0018	0.1813	0.0211	0.0460	-0.1737	-0.0070	0.0026
Y	0.0090	-0.0093	-2.6100	-0.1430	-2.3703	1.9165	0.2458	-0.1006	0.8644	1.5062
L'	0.0026	0.0042	-0.9770	-0.0197	-1.5400	0.3430	0.1179	-0.1134	0.4890	0.2879
N'	-0.0017	-0.0025	0.2580	0.0097	-0.0626	-0.7470	-0.0288	0.0227	0.0217	-0.4510

CASE 195 100 KT LEVEL FLIGHT 2000 FT 35000 LB AFT CG

PHI	THETA	PSI	ALPHA	BETA	GAMMA	QMR	B1S	A1S	QTR
-2.49	4.03	1.83	3.95	-2.00	0.00	11.90	7.27	-0.95	9.90

XDOT	ZDOT	U0	V0	W0	VT0
168.78	0.00	168.28	-5.89	11.61	168.78

	U	W	Q	V	P	R	DC	DB	DA	DP
X	-0.0456	0.0749	1.8007	-0.0037	-1.7900	-0.6696	0.5597	0.6861	-0.0317	-0.2014
Z	0.0530	-0.7920	-1.0781	-0.0268	-4.6004	3.5300	-9.1461	5.0270	0.5418	0.1321
M	0.0018	0.0072	-0.5390	-0.0014	0.2180	0.0162	0.1182	-0.2028	-0.0077	0.0149
Y	0.0099	-0.0037	-2.4800	-0.1380	-2.0607	1.8781	0.4082	-0.0149	0.8942	1.7622
L'	0.0016	0.0032	-0.9440	-0.0202	-1.4800	0.3310	0.1283	-0.1185	0.4837	0.2907
N'	-0.0013	-0.0020	-0.0948*	0.0064	-0.0926	-0.6650	-0.0070	0.0296	0.0446	-0.3927

CASE 196 150 KT LEVEL FLIGHT 2000 FT 35000 LB AFT CG

PHI	THETA	PSI	ALPHA	BETA	GAMMA	QMR	B1S	A1S	QTR
-4.69	-0.32	2.03	-0.49	-2.00	0.00	16.42	12.03	-2.04	11.71

XDOT	ZDOT	U0	V0	W0	VT0
253.17	0.00	253.01	-8.84	-2.16	253.17

	U	W	Q	V	P	R	DC	DB	DA	DP
X	-0.0652	0.0[illegible]84	1.6567	0.0005	-1.5700	-0.4944	0.5000	0.9590	0.1521	0.4417
Z	0.0967	-0.9260	-4.4080	-0.0587	-7.6056	4.4600	-10.1244	7.3579	0.8055	-0.1913
M	0.0016	0.0100	-0.6570	-0.0019	0.2820	0.0010	0.1764	-0.2591	-0.0192	0.0016
Y	0.0152	0.0031*	-1.0600	-0.1910	-0.9667	2.1040	0.5475	-0.0750	0.9186	2.0447
L'	0.0199	0.0098	-1.1100	-0.0256	-1.3000	0.3510	0.2529	-0.2047	0.4856	0.3499
N'	-0.0021	0.0012	0.0021	0.0064	-0.0917	-0.9189	-0.0148	-0.0001	0.0327	-0.5175

* This derivative was transcribed accurately from the original source but exceeds the usual range of values and should be used with due caution.

TABLE VI-4 CONCLUDED
CH-53D STABILITY AND CONTROL DERIVATIVES -- US UNITS
(BODY-FIXED FRL AXIS SYSTEM)

CASE 197 100 KT LEVEL FLIGHT 5000 FT 35000 LB MID CG

PHI	THETA	PSI	ALPHA	BETA	GAMMA	QHR	B1S	A1S	QTR
-2.24	0.61	1.98	0.53	-2.00	0.00	12.50	4.17	-1.33	9.97

XDOT	ZDOT	UO	VO	WO	VTO
168.79	0.00	168.67	-5.89	1.57	168.78

	U	W	Q	V	P	R	DC	DB	DA	DP
X	-0.0389	0.0231	1.8757	-0.0042	-2.0900	-0.3596	-0.1365	1.1270	0.0160	-0.1248
Z	0.0105	-0.7150	-2.3709	-0.0225	-3.8204	3.7900	-8.2325	4.4948	0.4982	0.0794
M	0.0023	0.0031	-0.5810	-0.0015	0.1880	0.0189	0.0761	-0.1857	-0.0180	0.0071
Y	0.0092	-0.0060	-2.6000	-0.1330	-2.3747	1.7709	0.2673	-0.0870	0.8658	1.4497
L'	0.0024	0.0043	-0.9690	-0.0199	-1.6900	0.3140	0.1129	-0.1088	0.4892	0.2688
N'	-0.0017	-0.0028	0.1720	0.0079	-0.0859	-0.6740	-0.0193	0.0297	0.0295	-0.3991

CASE 198 120 KT LEVEL FLIGHT 5000 FT 35000 LB MID CG

PHI	THETA	PSI	ALPHA	BETA	GAMMA	QHR	B1S	A1S	QTR
-2.65	-0.64	2.03	-0.73	-2.00	0.00	14.62	6.56	-1.75	10.45

XDOT	ZDOT	UO	VO	WO	VTO
202.54	0.00	202.40	-7.07	-2.59	202.54

	U	W	Q	V	P	R	DC	DB	DA	DP
X	-0.0458	0.0129	2.3560	-0.0040	-2.1400	-0.3716	-0.3072	1.2634	0.0620	0.0319
Z	0.0299	-0.6960	-3.5972	-0.0330	-4.8284	4.1800	-7.7140	5.0464	0.5737	0.0072
M	0.0024	0.0044	-0.6500	-0.0018	0.2030	0.0204	0.0983	-0.1935	-0.0075	0.0033
Y	0.0112	-0.0017	-2.9000	-0.1510	-2.6360	1.7972	0.3282	-0.0859	0.8733	1.4925
L'	0.0027	-0.0067	-1.0400	-0.0219	-1.7100	0.2970	0.1529	-0.1313	0.4638	0.2724
N'	-0.0022	-0.0038	0.2340	0.0073	-0.1180	-0.7160	-0.0427	0.0373	0.0241	-0.4155

CASE 199 120 KT LEVEL FLIGHT 5000 FT 35000 LB MID CG

PHI	THETA	PSI	ALPHA	BETA	GAMMA	QHR	B1S	A1S	QTR
-2.98	-0.74	2.04	-0.84	-2.00	0.00	13.03	5.13	-1.50	10.05

XDOT	ZDOT	UO	VO	WO	VTO
202.54	0.00	202.39	-7.07	-2.98	202.54

	U	W	Q	V	P	R	DC	DB	DA	DP
X	-0.0441	0.0255	1.5714	-0.0039	-2.0100	-0.2916	-0.1125	1.1359	0.0516	-0.0261
Z	0.0315	-0.7810	-3.4919	-0.0301	-4.8084	4.0800	-9.4892	5.6991	0.6336	0.0112
M	0.0023	0.0036	-0.6040	-0.0018	0.2000	0.0150	0.0929	-0.2043	-0.0087	0.0045
Y	0.0107	-0.0059	-2.6700	-0.1520	-2.1014	1.9919	0.3087	-0.0956	0.8702	1.6429
L'	0.0024	0.0056	-1.0000	-0.0219	-1.6200	0.3450	0.1511	-0.1152	0.5142	0.3080
N'	-0.0015	-0.0014	0.2010	0.0089	-0.0722	-0.7920	-0.0221	0.0197	0.0271	-0.4692

TABLE VI-5

CH-53D TRANSFER FUNCTION FACTORS

CASE 182 HOVER AFCS OFF

DENOMINATOR: (0) (.290) (.320) (.891) (2.03)[-.216;.472][-.0377;.667]<.0167>

CONTROL NUMERATORS:

PHI/DA .519 (0) (.0737) (.303) (.369) (.822)[-.236;.475]<.000792>
THE/DB -.179 (0) (.0414) (.278) (.332) (2.23)[-.0451;.665]<-.000675>
PSI/DP -.353 (.308) (.879) (2.10)[-.218;.473][-.0664;.652]<-.0191>

PHI/DB -.0780 (0) (.313) (-1.56)[-.825;.0908][.834;.308]<.297E-4>
PHI/DP .195 (0) (.0730) (.311) (-.506) (.828)[-.211;.481]<-.000429>
PHI/DC -.0298 (0) (.300) (.647)[-.647;.193][-.215;.715]<-.000110>

THE/DA .0900 (0) (.0760) (.272) (.517)[-.0572;.613]<.000362>
THE/DP -.0176 (0)[.899;.152][.152;.603][-.0110;1.08]<-.000172>
THE/DC .00632 (0) (.0846) (.284)[-.0381;.664][.774;2.51]<.000423>

PSI/DA .0330 (.303)[-.226;.478][.982;1.07][-.360;1.32]<.00455>
PSI/DB .00510 (.309) (-2.96) (3.21)[-.382;.553][.571;.613]<-.00172>
PSI/DC .0832 (.297) (.855) (2.08)[-.237;.473][-.0471;.672]<.00445>

ZD/DB 1.53 (0) (.276) (.333) (2.29)[-.0411;.669][.101;1.91]<.525>
YD/DA .964 (0) (.827)[.000;.325][-.238;.475][.110;4.14]<.325>
ZD/DC -6.41 (0) (.282) (.902) (2.02)[-.228;.468][-.0421;.670]<-.324>

XD/DC .0717 (0) (.284) (-5.68)[-.0394;.666][.718;1.76]<-.159>
YD/DP 1.22 (0) (.321) (-.365) (.819)[-.208;.481][.376;2.38]<-.154>
ZD/DB -.00473 (0) (.392)[.0349;.210][-.330;1.60][.998;8.24]<-.0142>

PHI/DA ;THE/DB -.0933 (0) (.0431) (.0735) (.283) (.390)<-.327E-4>
PHI/DA ;PSI/DP -.189 (.0739) (.303) (.823)[-.234;.475]<-.000788>
THE/DB ;PSI/DP .0633 (.0406) (.304) (2.29)[-.0747;.650]<.000754>

PHI/DB ;PSI/DP .0265 (.247) (.296) (-1.52)[-.492;.163]<-.783E-4>
PHI/DP ;THE/DB -.0363 (0) (.0435) (.0709) (.306) (-.516)<.177E-4>
PHI/DC ;THE/DB .00582 (0) (.0358) (.268)[-.703;.257]<.370E-5>

THE/DA ;PSI/DP -.0328 (.0712) (.453)[-.0836;.589]<-.000367>
THE/DP ;PHI/DA -.00798 (0) (.0267) (.0738) (-.0882) (.755)<.112E-5>
THE/DC ;PHI/DA .00310 (0) (.0752) (.103) (.323) (2.88)<.224E-4>

PSI/DA ;THE/DB -.00588 (.0368) (.286) (1.50)[-.375;1.26]<-.000147>
PSI/DB ;PHI/DA .00522 (.0978) (.303) (-2.50)[.117;.482]<-.898E-4>
PSI/DC ;THE/DB -.0149 (.0348) (.269) (2.27)[-.0608;.657]<-.000137>

PSI/DC ;PHI/DA .0441 (.0988) (.303) (.782)[-.235;.483]<.000241>
XD/DB ;PHI/DA .799 (0) (.0762) (.280) (.393)[.0990;1.94]<.0252>
XD/DB ;PSI/DP -.538 (.303) (2.34)[-.0715;.652][.102;1.92]<-.597>

YD/DA ;THE/DB -.174 (0) (.0405) (.285) (.367)[.107;4.15]<-.0126>
YD/DA ;PSI/DP -.381 (.292) (.825)[-.235;.476][.104;3.99]<-.330>
ZD/DC ;PHI/DA -3.33 (0) (.0826) (.322) (.819)[-.237;.474]<-.0163>

ZD/DC ;THE/DB 1.15 (0) (.0421) (.287) (2.22)[-.0585;.662]<.0135>
ZD/DC ;PSI/DP 2.27 (.887) (2.11)[-.229;.469][-.0540;.662]<.408>
XD/DC ;PHI/DA .00163 (0) (.0929) (.322) (-8.78)[.932;4.22]<-.00859>

XD/DC ;THE/DB -.00928 (0) (.284) (1.36) (4.32)[-.0957;.664]<-.00683>
XD/DC ;PSI/DP .0272 (1.64)[-.0743;.654][-.0414;3.02]<.174>
YD/DP ;PHI/DA .444 (0) (.0667) (.200) (.824)[-.229;.467]<.00106>

YD/DP ;THE/DB -.222 (0) (.0402) (.314) (-.370)[.385;2.40]<.00598>
ZD/DB ;PHI/DA -.00706 (0) (.0324)[.223;.423][.619;3.22]<-.000424>
ZD/DB ;PSI/DP .0256 (5.22)[.210;.0766][-.472;1.43]<.00160>

PHI/DA ;THE/DB ;PSI/DP .0342 (.0429) (.0741) (.301)<.327E-4>
PHI/DC ;THE/DB ;PSI/DP .000968 (.0354) (.254) (-.886)<-.771E-5>
THE/DC ;PHI/DA ;PSI/DP -.000455 (.0720) (.102) (6.77)<-.227E-4>

TABLE VI-5 CONTINUED
CH-53D TRANSFER FUNCTION FACTORS

CASE 182 HOVER AFCS OFF

CONTROL NUMERATORS CONCLUDED:

PSI/DC ;PHI/DA ;THE/DB -.00798 (.0349) (.0988) (.270) <-.742E-5>

XD/DB ;PHI/DA ;PSI/DP -.292 (.0768) (.300) [.0999; 1.94]<-.0253>
YD/DA ;THE/DB ;PSI/DP .0687 (.0403) (.293) [.103; 3.99]<.0128>
ZD/DC ;PHI/DA ;THE/DB .599 (0) (.0427) (.0833) (.321) <.000684>

ZD/DC ;THE/DB ;PSI/DP -.407 (.0407) (2.29) [-.0663;.653]<-.0162>
ZD/DC ;PHI/DA ;PSI/DP 1.22 (.0856) (.825) [-.235;.475]<.0194>
XD/DC ;PHI/DA ;THE/DB -.00511 (0) (.0893) (.316) (2.49) <-.000359>

XD/DC ;PHI/DA ;PSI/DP .00128 (.0937) (5.00) [-.114; 3.94]<.00930>
XD/DC ;THE/DB ;PSI/DP .000927 (3.41) (5.23) [-.0257;.641]<.00e80>
YD/DP ;PHI/DA ;THE/DB -.0803 (0) (.211) [.981;.0495]<-.415E-4>

ZD/DB ;PHI/DA ;PSI/DP .00281 (-.158) (5.71) [.433;.545]<-.000753>

ZD/DC ;PHI/DA ;THE/DB ;PSI/DP -.220 (.0412) (.0864) <-.000781>
XD/DC ;PHI/DA ;THE/DB ;PSI/DP .000469 (.0898) (8.16) <.000344>

GUST NUMERATORS:

PHI/UG -.00251 (0) (0) (.285) (.325) (-1.68) [.232;.0850]<.281E-5>
THE/UG -.00570 (0) (0) (.290) (.338) (2.23) [-.0455;.666]<-.000518>
PSI/UG .00113 (0) (0) (.268) (.365) (2.41) [-.327;.659]<.000116>

PHI/VG .0307 (0) (0) (.287) (.317) (.839) [-.214;.471]<.000521>
THE/VG -.00202 (0) (0) (-.0691) (.206) (.265) [-.433;.607]<.280E-5>
PSI/VG -.00262 (0) (0) (.302) (.808) (3.23) [-.218;.470]<-.000459>

PHI/WG -.00116 (0) (0) (.213) (.344) (2.95) [-.108;.379]<-.359E-4>
THE/WG .00243 (0) (0) (.0812) (.302) (2.08) [-.0493;.669]<.554E-4>
PSI/WG -.000395 (0) (.489) (2.13) [-.228;.305][-.530;.782]<-.233E-4>

PHI/PG 1.98 (0) (.0948) (.303) (.369) (.898) [-.217;.467]<.00390>
THE/PG -.189 (0) (.169) (.267) (-.367) (.936) [-.178;.665]<.00130>
PSI/PG .144 (.302) (.880) (1.34) [-.222;.469][-.393; 1.20]<.0164>

PHI/QG .905 (0) (.0309) (.299) (.351) (.515) [-.466;.506]<.000388>
THE/QG .494 (0) (.0775) (.286) (.337) (2.49) [-.0438;.661]<.00402>
PSI/QG -.0967 (.301) (-.463) (2.99) [.822;.545][-.281;.558]<.00371>

PHI/RG -.414 (0) (0) (.0342) (.311) (.797) [-.229;.476]<-.000793>
THE/RG -.0661 (0) (0) (.125) (.151) [-.0416;.599]<-.000449>
PSI/RG .335 (.307) (.865) (2.17) [-.216;.471][-.0607;.625]<.0167>

XD/UG .0897 (0) (.289) (.317) (2.22) [-.0416;.669][.153; 1.43]<.0167>
ZD/UG .00395 (0) (0) (0) (.300) (-.822) (2.98) [.233; 1.47]<-.00625>
YD/VG .155 (0) (.285) (.320) (.831) [-.214;.471][.296; 2.53]<.0167>

XD/WG -.00413 (0) (0) (.302) (2.13) [-.0397;.671][-.0876; 4.29]<-.0219>
ZD/WG .290 (0) (.302) (.918) (2.02) [-.201;.467][-.0578;.685]<.0167>

PHI/UG ;THE/DB -.534E-4 (0) (0) (-.0498) (.305) <.811E-6>
PHI/UG ;PSI/DP .000663 (0) (.304) (-2.03) [.191;.0887]<-.321E-5>
THE/UG ;PHI/DA -.00297 (0) (0) (.0737) (.298) (.378) <-.247E-4>

THE/UG ;PSI/DP .00203 (0) (.304) (2.27) [-.0747;.650]<.000593>
PSI/UG ;PHI/DA .000671 (0) (-.166) (.303) [.264;.151]<-.766E-6>
PSI/UG ;THE/DB -.000174 (0) (.305) (2.24) [-.0674;.672]<-.535E-4>

PHI/VG ;THE/DB -.00566 (0) (0) (.0414) (.277) (.324) <-.211E-4>
PHI/VG ;PSI/DP -.0103 (0) (.309) (.838) [-.215;.472]<-.000596>
THE/VG ;PHI/DA -.000865 (0) (0) (.0761) (.271) (.626) <-.112E-4>

THE/VG ;PSI/DP .000665 (0) (-.0812) (.193) [-.570;.553]<-.320E-5>
PSI/VG ;PHI/DA -.00237 (0) (.303) (.844) [-.224;.484]<-.000142>
PSI/VG ;THE/DB .000480 (0) (.266) (3.23) [.634;.0255]<.289E-6>

TABLE VI-5 CONTINUED
CH-53D TRANSFER FUNCTION FACTORS

CASE 182 HOVER AFCS OFF

GUST NUMERATORS CONTINUED:

PHI/WG ;THE/DB .000397 (0) (0) (.0383) (.181) (.492) <.135E-5>
PHI/WG ;PSI/DP .000486 (0) (.245) (2.31) [-.118;.383] <.405E-4>
THE/WG ;PHI/DA .00125 (0) (0) (.0755) (.0958) (.377) <.341E-5>

THE/WG ;PSI/DP -.000863 (0) (.0814) (2.12) [-.0793;.654] <-.636E-4>
PSI/WG ;PHI/DA -.000166 (0) (.301) (-1.04) [.0840;.410] <.869E-5>
PSI/WG ;THE/DB .583E-4 (0) (.0710) (1.87) [-.263;.927] <.666E-5>

PHI/PG ;THE/DB -.352 (0) (.0433) (.0922) (.284) (.400) <-.000160>
PHI/PG ;PSI/DP -.693 (.100) (.302) (.879) [-.216;.468] <-.00404>
THE/PG ;PHI/DA -.0870 (0) (.0341) (.0719) (.294) (.369) <-.231E-4>

THE/PG ;PSI/DP .0693 (.161) (-.313) (.876) [-.233;.654] <-.00131>
PSI/PG ;PHI/DA .0127 (.303) (.368) (-1.18) [-.0322;.413] <-.000285>
PSI/PG ;THE/DB -.0249 (.0334) (.287) (1.57) [-.366;1.19] <-.000530>

PHI/QG ;THE/DB -.123 (0) (.255) (.339) [.850;.0463] <-.229E-4>
PHI/QG ;PSI/DP -.300 (.0261) (.304) (.564) [-.449;.509] <-.000348>
THE/QG ;PHI/DA .262 (0) (.0754) (.0817) (.312) (.363) <.000182>

THE/QG ;PSI/DP -.176 (.0771) (.319) (2.53) [-.0723;.695] <-.00456>
PSI/QG ;PHI/DA -.0800 (-.0629) (.303) (.421) [-.332;.332] <.706E-4>
PSI/QG ;THE/DB .0148 (.135) (.358) (2.94) [-.138;.355] <.000265>

PHI/RG ;THE/DB .0744 (0) (0) (.303) [.991;.0382] <.329E-4>
PHI/RG ;PSI/DP .0808 (.0951) (.321) (.746) [-.237;.483] <.000429>
THE/RG ;PHI/DA .00313 (0) (0) (-.0173) (.0755) <-.409E-5>

THE/RG ;PSI/DP .00444 (5.39) [.824;.138] [-.0456;.613] <.000173>
PSI/RG ;PHI/DA .187 (.0761) (.303) (.813) [-.236;.475] <.000792>
PSI/RG ;THE/DB -.0600 (.0413) (.300) (2.33) [-.0635;.623] <-.000675>

YD/UG ;PHI/DA .0468 (0) (.0734) (.296) (.381) [.153;1.43] <.000792>
YD/UG ;THE/DB -.00736 (0) (.269) (.384) (2.23) [-.0484;.666] <-.000675>
YD/UG ;PSI/DP -.0317 (.303) (2.26) [-.0717;.652] [.153;1.44] <-.0191>

ZD/UG ;PHI/DA .00190 (0) (0) (-.128) (.166) (-.341) (1.72) <.237E-4>
ZD/UG ;THE/DB -.000733 (0) (0) (.809) (2.29) [.0651;.570] <-.000442>
ZD/UG ;PSI/DP -.00132 (0) (0) (-1.17) (2.78) [.0278;1.38] <.00813>

YD/VG ;PHI/DA .0506 (0) (.829) [.992;.293] [-.230;.468] <.000792>
YD/VG ;THE/DB -.0281 (0) (.0414) (.277) (.326) [.306;2.54] <-.000675>
YD/VG ;PSI/DP -.0514 (.311) (.830) [-.215;.472] [.289;2.54] <-.0191>

XD/WG ;PHI/DA -.00203 (0) (0) (.0904) (.377) [-.0141;4.45] <-.00137>
XD/WG ;THE/DB -.00296 (0) (0) (.302) (2.35) [-.00776;.638] <-.000856>
XD/WG ;PSI/DP .00145 (0) (2.13) [-.0714;.655] [-.0995;4.35] <.0251>

ZD/WG ;PHI/DA .151 (0) (.0755) (.380) (.811) [-.233;.476] <.000792>
ZD/WG ;THE/DB -.0520 (0) (.0415) (.305) (2.23) [-.0454;.679] <-.000675>
ZD/WG ;PSI/DP -.103 (.908) (2.10) [-.202;.466] [-.0864;.670] <-.0191>

XD/UG ; ZD/DC -.575 (0) (.283) (2.22) [-.0517;.663] [.153;1.43] <-.324>
YD/VG ; ZD/DC -.947 (0) (.279) (.849) [-.222;.470] [.294;2.56] <-.324>

PHI/UG ;THE/DB ;PSI/DP .339E-4 (0) (-.223) (.305) <-.231E-5>
THE/UG ;PHI/DA ;PSI/DP .00110 (0) (.0738) (.303) <.246E-4>
PSI/UG ;PHI/DA ;THE/DB -.908E-4 (0) (.100) (.304) <-.277E-5>

PHI/VG ;THE/DB ;PSI/DP .00190 (0) (.0407) (.304) <.236E-4>
THE/VG ;PHI/DA ;PSI/DP .000280 (0) (.0711) (.569) <.113E-4>
PSI/VG ;PHI/DA ;THE/DB .000436 (0) (.0369) (.286) <.460E-5>

PHI/WG ;THE/DB ;PSI/DP -.000152 (0) (.0359) (.245) <-.134E-5>
THE/WG ;PHI/DA ;PSI/DP -.000460 (0) (.0720) (.103) <-.341E-5>
PSI/WG ;PHI/DA ;THE/DB .174E-4 (0) (-.0398) [-.0559) <.282E-7>

MICROFILMED FROM
BEST AVAILABLE COPY

TABLE VI-5 CONTINUED

CH-53D TRANSFER FUNCTION FACTORS

CASE 182 HOVER AFCS OFF

GUST NUMERATORS CONCLUDED:

```
  PHI/PG ;THE/DB ;PSI/DP    .130 (.0433) (.0981) (.300)<.000165>
  THE/PG ;PHI/DA ;PSI/DP    .0320 (.0338) (.0763) (.284)<.234E-4>
  PSI/PG ;PHI/DA ;THE/DB   -.00140 (.0448) (.290) (-.501)<.913E-5>

  PHI/QG ;THE/DB ;PSI/DP    .0406 (.301)[.833;.0516]<.325E-4>
  THE/QG ;PHI/DA ;PSI/DP   -.0969 (.0724) (.0864) (.300)<-.000182>
  PSI/QG ;PHI/DA ;THE/DB    .0118 (.300)[.863;.0710]<.178E-4>

  PHI/RG ;THE/DB ;PSI/DP   -.0141 (.0430) (.0932) (.311)<-.177E-4>
  THE/RG ;PHI/DA ;PSI/DP    .00299 (.0379) (.0766) (-.129)<-.112E-5>
  PSI/RG ;PHI/DA ;THE/DB   -.0337 (.0430) (.0761) (.297)<-.327E-4>

   XD/UG ;PHI/DA ;THE/DB   -.00384 (0) (.0787) (.268) (.405)<-.327E-4>
   XD/UG ;PHI/DA ;PSI/DP   -.0171 (.0735) (.304)[.154;1.44]<-.000788>
   XD/UG ;THE/DB ;PSI/DP    .00258 (.303) (2.27)[-.0741;.652]<.000754>

   ZD/UG ;PHI/DA ;THE/DB   -.000182 (0) (0) (.0130) (1.12)<-.142E-4>
   ZD/UG ;PHI/DA ;PSI/DP   -.000664 (0) (-.143) (.495) (-.714)<-.336E-4>
   ZD/UG ;THE/DB ;PSI/DP    .000248 (0) (2.12)[-.321;.308]<.494E-4>

   YD/VG ;PHI/DA ;THE/DB   -.00913 (0) (.0417)[.998;.293]<-.327E-4>
   YD/VG ;PHI/DA ;PSI/DP   -.0164 (.264) (.826)[-.229;.469]<-.000788>
   YD/VG ;THE/DB ;PSI/DP    .00932 (.0406) (.306)[.299;2.55]<.000754>

   XD/WG ;PHI/DA ;THE/DB   -.00156 (0) (0) (.0887) (.374)<-.518E-4>
   XD/WG ;PHI/DA ;PSI/DP    .000734 (0) (.0941)[-.0141;4.49]<.00139>
   XD/WG ;THE/DB ;PSI/DP    .00106 (0) (2.43)[-.0471;.623]<.000997>

   ZD/WG ;PHI/DA ;THE/DB   -.0271 (0) (.0431) (.0755) (.371)<-.327E-4>
   ZD/WG ;PHI/DA ;PSI/DP   -.0550 (.0768) (.827)[-.232;.475]<-.000788>
   ZD/WG ;THE/DB ;PSI/DP    .0184 (.0406) (2.29)[-.0740;.663]<.000754>

   XD/UG ; ZD/DC ;PHI/DA   -.300 (0) (.0825) (.322)[.154;1.43]<-.0163>
   XD/UG ; ZD/DC ;THE/DB    .0472 (0) (.292) (2.22)[-.0572;.662]<.0135>
   XD/UG ; ZD/DC ;PSI/DP    .203 (2.26)[-.0637;.655][.153;1.44]<.408>

   YD/VG ; ZD/DC ;PHI/DA   -.306 (0) (.290) (.833)[-.234;.469]<-.0163>
   YD/VG ; ZD/DC ;THE/DB    .172 (0) (.0421) (.282)[.304;2.57]<.0135>
   YD/VG ; ZD/DC ;PSI/DP    .332 (.846)[-.223;.471][.290;2.56]<.408>

   XD/UG ;PHI/DA ;THE/DB ;PSI/DP    .00139 (.0793) (.297)<.327E-4>
   ZD/UG ;PHI/DA ;THE/DB ;PSI/DP    .000136 (0) (-.162)<-.221E-4>
   YD/VG ;PHI/DA ;THE/DB ;PSI/DP    .00297 (.0415) (.265)<.327E-4>

   XD/WG ;PHI/DA ;THE/DB ;PSI/DP    .000575 (0) (.0901)<.518E-4>
   ZD/WG ;PHI/DA ;THE/DB ;PSI/DP    .00992 (.0426) (.0774)<.327E-4>
   XD/UG ; ZD/DC ;PHI/DA ;THE/DB    .0246 (0) (.0854) (.325)<.000684>

   YD/VG ; ZD/DC ;PHI/DA ;THE/DB    .0553 (0) (.0423) (.293)<.000684>
   YD/VG ; ZD/DC ;PHI/DA ;PSI/DP    .106 (.838)[-.235;.470]<.0194>
   XD/WG ; ZD/DC ;PHI/DA ;THE/DB    .0115 (0) (.0894) (.349)<.000359>

   XD/UG ; ZD/DC ;PHI/DA ;THE/DB ;PSI/DP   -.00893 (.0875)<-.000781>
   YD/VG ; ZD/DC ;PHI/DA ;THE/DB ;PSI/DP   -.0191 (.0409)<-.000781>
   XD/WG ; ZD/DC ;PHI/DA ;THE/DB ;PSI/DP   -.00383 (.0898)<-.000344>
```

TABLE VI-5 CONTINUED
CH-53D TRANSFER FUNCTION FACTORS

CASE 182 HOVER AFCS ON

DENOMINATOR: (0) (.0730) (.114) (.306) (.351) (.714) (1.06) (2.33) (3.43) [.635;1.62] <.0142>

CONTROL NUMERATORS:

PHI/DA .519 (0) (.0742) (.0982) (.113) (.301) (.714) (2.09) [.604;1.63] <.000514>
THE/DB -.179 (0) (.0438) (.0709) (.988) (1.07) (2.22) (3.82) [1.000;.329] < -.000559>
PSI/DP -.353 (.112) (.556) (.714) (1.03) (3.95) [.997;.320][.635;1.63] <-.0173>

PHI/DB -.0780 (0) (.0899) (-.160) (.301) (1.07) (-1.52) (1.96) [.951;.117] <-.148E-4>
PHI/DP .195 (0) (.0742) (.114) (.302) (.556) (.714) (-1.09) [.615;1.66] <-.000590>
PHI/DC -.0298 (0) (.109) (.270) (.714) (-1.32) [.966;.0986][.559;1.56] <.196E-4>

THE/DA .0895 (0) (.455) (.714) (2.12) [.984;.0811][-.0686;.599] <.000148>
THE/DP -.0176 (0) (.0874) (.473) (.556) (.714) [-.0336;.260][.465;2.80] <-.000153>
THE/DC .00632 (0) (.361) (.714) [.993;.0837][.903;1.13][.672;4.16] <.000251>

PSI/DA .0330 (.120) (.275) (.551) (.714) (1.39) [-.361;1.27][.556;1.68] <.00270>
PSI/DB .00510 (.626) (1.07) (1.26) (-1.69) (9.18) [.992;.298][.133;.512] <-.00155>
PSI/DC .0832 (.120) (.251) (.373) (.565) (.714) (1.02) (3.87) [.630;1.64] <.00400>

XD/IB 1.53 (0) (.0739) (.316) (.344) (.974) (1.07) (2.20) (3.97) [.0926;1.93] <.413>
YD/DA .964 (0) (.290) (.714) (2.12) [1.000;.104][.607;1.64][.119;4.11] < .206>
ZD/DC -6.41 (0) (.0727) (.114) (.366) (.714) (1.03) (2.32) (3.43) [.634;1.62] <-.298>

XD/DC .172 (0) (.0807) (.358) (.714) (-.985) [.857;1.06][.406;2.96] <-.0346>
YD/DP 1.22 (0) (.112) (.293) (-.487) (.556) (.714) [.614;1.65][.619;3.23] <-.218>
ZD/DB -.0932 (0) (.0819) (1.07) (2.50) (3.90) [.575;.149][.0804;1.56] <-.00628>

PHI/DA ;THE/DB -.0933 (0) (.0432) (.0724) (.0981) (.302) (1.07) (2.10) <-.198E-4>
PHI/DA ;PSI/DP -.189 (.0737) (.116) (.299) (.556) (.714) [.606;1.63] <-.000513>
THE/DB ;PSI/DP .0633 (.0410) (.556) (.960) (1.07) (4.24) [.995;.320] <.000639>

PHI/DB ;PSI/DP .0265 (.247) (.296) (.556) (1.07) (-1.52) [-.492;.163] <-.468E-4>
PHI/DP ;THE/DB -.0363 (0) (.0432) (.0725) (.304) (.556) (1.07) (-1.09) <.223E-4>
PHI/DC ;THE/DB .00582 (0) (.0282) (.216) (1.07) (-1.35) [.971;.0973] <-.481E-6>

THE/DA ;PSI/DP -.0328 (.0712) (.453) (.556) (.714) [-.0836;.589] <-.000146>
THE/DP ;PHI/DA -.00798 (0) (.0287) (.0738) (-.0882) (.556) (.714) (.755) <.446E-6>
THE/DC ;PHI/DA .00310 (0) (.0990) (.714) [.992;.0837][.869;2.41] <.891E-5>

PSI/DA ;THE/DB -.00588 (.0368) (.286) (.556) (1.07) (1.50) [-.375;1.26] <-.870E-4>
PSI/DB ;PHI/DA .00522 (.0977) (.302) (.799) (1.07) (-1.67) [.300;.492] <-.533E-4>
PSI/DC ;THE/DB -.0149 (.0348) (.266) (.390) (.556) (.936) (1.07) (4.17) <-.000125>

PSI/DC ;PHI/DA .0441 (.0989) (.120) (.250) (.563) (.714) [.602;1.68] <.000141>
XD/DB ;PHI/DA .799 (0) (.0750) (.0981) (.301) (1.07) (2.10) [.0937;1.94] <.0149>
YD/DB ;PSI/DP -.538 (.556) (.946) (1.07) (4.35) [.996;.320][.0942;1.93] <-.503>

YD/DA ;THE/DB -.174 (0) (.0406) (.0953) (.291) (1.07) (2.12) [.117;8.12] <-.00749>
YD/DA ;PSI/DP -.381 (.113) (.289) (.556) (.714) [.607;1.63][.103;3.98] <-.209>
ZD/DC ;PHI/DA -3.33 (0) (.0734) (.0985) (.113) (.714) (2.06) [.605;1.63] <-.0106>

ZD/DC ;THE/DB 1.15 (0) (.0441) (.0705) (.371) (.955) (1.07) (2.21) (3.82) <.0116>
ZD/DC ;PSI/DP 2.27 (.112) (.356) (.556) (.714) (1.02) (3.95) [.635;1.63] <.384>
XD/DC ;PHI/DA .0308 (0) (.0807) (.0988) (.714) (-.970) [.865;2.67] <-.00121>

XD/DC ;THE/DB -.00928 (0) (.0857) (.372) (.815) (1.07) (6.45) [.643;1.90] <-.00600>
XD/DC ;PSI/DP .0295 (.340) (.556) (.714) [.000;1.57][-.864;2.10] <.0432>
YD/DP ;PHI/DA .444 (0) (.218) (.556) (.714) [.980;.0811][.609;1.63] <.000675>

YD/DP ;THE/DB -.222 (0) (.0402) (.294) (-.487) (.556) (1.07) [.625;3.23] <.00792>
ZD/DB ;PHI/DA -.00706 (0) (.0873) (.109) (1.07) [.492;.498][.705;3.79] <-.000251>
ZD/DB ;PSI/DP .0398 (-.0858) (.199) (.556) (1.07) (5.40) [-.00949;1.26] <-.00347>

PHI/DA ;THE/DB ;PSI/DP .0342 (.0429) (.0741) (.301) (.556) (1.07) <.198E-4>
PHI/DC ;THE/DB ;PSI/DP .000968 (.0354) (.254) (.556) (-.886) (1.07) <-.457E-5>
THE/DC ;PHI/DA ;PSI/DP -.000455 (.0720) (.102) (.556) (.714) (6.77) <-.900E-5>

TABLE VI-5 CONTINUED
CH-53D TRANSFER FUNCTION FACTORS

CASE 182 HOVER AFCS ON

CONTROL NUMERATORS CONCLUDED:

PSI/DC ;PHI/DA ;THE/DB -.00798 (.0349) (.0988) (.270) (.556) (1.07) <-.440E-5>

XD/DB ;PHI/DA ;PSI/DP -.292 (.0768) (.300) (.556) (1.07) [.0999; 1.94]<-.0150>
YD/DA ;THE/DB ;PSI/DP .0687 (.0403) (.290) (.556) (1.07) [.103; 3.99]<.00760>
ZD/DC ;PHI/DA ;THE/DB .599 (0) (.0439) (.0713) (.0984) (1.07) (2.06) <.000406>

ZD/DC ;THE/DB ;PSI/DP -.407 (.0408) (.360) (.556) (.944) (1.07) (4.24) <-.0142>
ZD/DC ;PHI/DA ;PSI/DP 1.22 (.0843) (.115) (.556) (.714) [.606; 1.63]<.0125>
XD/DC ;PHI/DA ;THE/DB -.00511 (0) (.0863) (.0983) (1.07) [.835; 2.15]<-.000213>

XD/DC ;PHI/DA ;PSI/DP .00128 (.0988) (.556) (.714) (5.57) [-.942; 2.38]<.00159>
XD/DC ;THE/DB ;PSI/DP .000927 (.361) (.556) (.855) (1.07) [.880; 5.98]<.00605>
YD/DP ;PHI/DA ;THE/DB -.0803 (0) (.211) (.556) (1.07) [.981; .0495]<-.246E-4>

ZD/DB ;PHI/DA ;PSI/DP .00281 (-.158) (.556) (1.07) (5.71) [.433; .545]<-.000446>

ZD/DC ;PHI/DA ;THE/DB ;PSI/DP -.220 (.0412) (.0864) (.556) (1.07) <-.000463>
XD/DC ;PHI/DA ;THE/DB ;PSI/DP .000469 (.0898) (.556) (1.07) (8.16) <.000204>

GUST NUMERATORS:

PHI/UG -.00251 (0) (0) (.0833) (.133) (.714) (1.78) (-2.18) [.000; .265]<.626E-5>
THE/UG -.00570 (0) (0) (.0721) (.311) (.347) (.714) (1.01) (2.17) (3.86) <-.000269>
PSI/UG .00113 (0) (.315) (.335) (.602) (.714) (1.14) (5.03) [.392; 1.29]<.000492>

PHI/VG .0207 (0) (0) (.0728) (.114) (.302) (.714) (1.90) [.620; 1.65]<.000284>
THE/VG -.00202 (0) (0) (.466) (.714) (1.89) [.981; .0793][.365; 2.32]<-.430E-4>
PSI/VG -.00262 (0) (.121) (.275) (.553) (.714) (1.20) (7.57) [.621; 1.64]<-.000839>

PHI/WG -.00116 (0) (0) (.0730) (.113) (.289) (.714) (5.00) [.971; 1.44]<-.205E-4>
THE/WG .00243 (0) (0) (.0744) (.0791) (.364) (.714) (1.08) (2.22) (3.54) <.316E-4>
PSI/WG -.000395 (0) (.0532) (.443) (.714) (3.84) [.996; .895][.180; .926]<-.175E-4>

PHI/PG 1.98 (0) (.0734) (.113) (.124) (.301) (.714) (2.12) [.636; 1.65]<.00242>
THE/PG -.189 (0) (-.0689) (.0754) (.153) (.430) (.714) (2.08) [.656; 2.10]<.000424>
PSI/PG .144 (.106) (.276) (.548) (.714) (1.45) [-.276; 1.09][.651; 1.70]<.00808>

PHI/QG .905 (0) (.0410) (.0722) (.113) (.301) (.714) (1.91) [.390; 1.40]<.000245>
THE/QG .494 (0) (.714) (.877) (2.14) (4.32) [.998; .0754][.972; .356]<.00207>
PSI/QG -.0967 (.0262) (.220) (.245) (.565) (.714) (1.21) (7.09) [.472; 1.42]<-.0309#5>

PHI/RG -.414 (0) (.0743) (.114) (-.148) (.303) (.714) (1.08) [.604; 1.61]<.000313>
THE/RG -.0892 (0) (.0916) (-.190) (.636) (.714) (1.11) [.395; .334]<.874E-4>
PSI/RG .335 (.112) (.556) (.714) (1.06) (4.19) [.993; .301][.630; 1.63]<.0158>

XD/UG .0897 (0) (.0736) (.308) (.350) (.714) (1.01) (2.17) (3.86) [.306; 1.82]<.0142>
ZD/UG .00195 (0) (0) (.0804) (.714) (2.52) (3.63) [.886; .400][.569; 2.15]<.00153>
YD/VG .155 (0) (.0794) (.112) (.293) (.714) (1.90) [.617; 1.64][.567; 3.11]<.0142>

XD/WG -.00413 (0) (0) (.0733) (.360) (.714) (1.10) (-1.40) (2.13) (3.67) (-5.42) <-.00510>
ZD/WG .290 (0) (.0730) (.114) (.375) (.714) (1.05) (2.32) (3.41) [.634; 1.62]<.0142>

PHI/UG ;THE/DB -.000225 (0) (0) (.305) (1.07) [.979; .0841]<-.517E-6>
PHI/UG ;PSI/DP .000663 (0) (-.147) (.307) (.404) (.556) (.714) (-2.67) <.128E-4>
THE/UG ;PHI/DA -.00297 (0) (0) (.0735) (.0980) (.304) (.714) (2.11) <-.979E-5>

THE/UG ;PSI/DP .00203 (0) (.556) (.714) (.972) (4.21) [.999; .317]<.000312>
PSI/UG ;PHI/DA .000671 (0) (.0969) (.304) (.621) (.714) [.428; 1.38]<.166E-4>
PSI/UG ;THE/DB -.000174 (0) (.306) (.412) (.556) (.910) (1.07) (4.06) <-.480E-4>

PHI/VG ;THE/DB -.00566 (0) (0) (.0439) (.0707) (.304) (1.07) (1.90) <-.108E-4>
PHI/VG ;PSI/DP -.0101 (0) (.111) (.302) (.556) (.714) [.620; 1.65]<-.000380>
THE/VG ;PHI/DA -.000865 (0) (0) (.569) (.714) (1.92) [.983; .0810]<-.441E-5>

THE/VG ;PSI/DP .000665 (0) (.0678) (.465) (.556) (.714) [.340; 2.28]<.433E-4>
PSI/VG ;PHI/DA -.00217 (0) (.120) (.275) (.556) (.714) [.614; 1.65]<-.885E-4>
PSI/VG ;THE/DB .000480 (0) (.0372) (.286) (.556) (1.07) (1.17) (7.67) <.272E-4>

TABLE VI-5 CONTINUED
CH-53D TRANSFER FUNCTION FACTORS

CASE 182 HOVER AFCS ON

GUST NUMERATORS CONTINUED:

PHI/WG ;THE/DB .000397 (0) (0) (.0451) (.0707) (.269) (1.07) (2.24) <.813E-6>
PHI/WG ;PSI/DP .000486 (0) (.120) (.245) (.556) (.714) (1.25) (3.44) <.242E-4>
THE/WG ;PHI/DA .00125 (0) (0) (.119) (.714) (2.11) [.992;.0778]<.135E-5>

THE/WG ;PSI/DP -.000863 (0) (.0804) (.342) (.556) (.714) (1.05) (3.92) <-.386E-4>
PSI/WG ;PHI/DA -.000166 (0) (.115) (-.288) (.638) (.714) [.356; 1.14]<.328E-5>
PSI/WG ;THE/DB .583E-4 (0) (.110) (.556) (1.07) (2.31) [.638;.685]<.411E-5>

PHI/PG ;THE/DB -.352 (0) (.0432) (.0717) (.124) (.301) (1.07) (2.11) <-.916E-4>
PHI/PG ;PSI/DP -.693 (.299) (.556) (.714) [.996;.107][.636; 1.66]<-.00261>
THE/PG ;PHI/DA -.0870 (0) (.0342) (.0664) (.109) (.283) (.714) (2.11) <-.916E-5>

THE/PG ;PSI/DP .0693 (-.0619) (.138) (.425) (.556) (.714) [.668;2.08]<-.000429>
PSI/PG ;PHI/DA .0127 (.112) (.288) (.616) (-.687) (.714) [.436; 1.20]<-.000169>
PSI/PG ;THE/DB -.0249 (.0316) (.286) (.556) (1.07) (1.56) [-.230; 1.12]<-.000260>

PHI/QG ;THE/DB -.123 (0) (.0245) (.0571) (.0689) (.302) (1.07) (1.86) <-.718E-5>
PHI/QG ;PSI/DP -.300 (.0377) (.125) (.299) (.556) (.714) [.385; 1.42]<-.000337>
THE/QG ;PHI/DA .262 (0) (.107) (.300) (.714) (2.11) [.996;.0757]<.724E-4>

THE/QG ;PSI/DP -.176 (.0769) (.556) (.714) (.844) (4.65) [.964;.346]<-.00252>
PSI/QG ;PHI/DA -.0800 (.0341) (.111) (.300) (.599) (.714) [.485; 1.44]<-.807E-4>
PSI/QG ;THE/DB .0148 (.278) (.556) (1.07) (1.15) (6.65) [.743;.116]<.000261>

PHI/RG ;THE/DB .0744 (0) (.0432) (.0727) (-.148) (.306) (1.04) (1.07) <-.118E-4>
PHI/RG ;PSI/DP .0808 (.307) (.556) (.714) [.999;.104][.576; 1.62]<.000278>
THE/RG ;PHI/DA -.00751 (0) (0) (.00798) (.0759) (-.358) (.714) <.116E-5>

THE/RG ;PSI/DP .00444 (.160) (.556) (.602) (.714) (8.86) [.259;.206]<.640E-4>
PSI/RG ;PHI/DA .187 (.0760) (.117) (.293) (.557) (.714) [.604; 1.63]<.000514>
PSI/RG ;THE/DB -.0600 (.0416) (.556) (.992) (1.07) (4.44) [.993;.302]<-.000592>

XD/UG ;PHI/DA .0468 (0) (.0747) (.0979) (.302) (.714) (2.10) [.306; 1.82]<.000514>
XD/UG ;THE/DB -.00736 (0) (.0762) (1.01) (1.07) (2.16) (3.86) [.996;.328]<-.000539>
XD/UG ;PSI/DP -.0317 (.556) (.714) (.973) (4.19) [.998;.318][.306; 1.82]<-.0173>

ZD/UG ;PHI/DA .00190 (0) (0) (.0824) (.111) (.714) (3.12) [.491; 1.58]<.961E-4>
ZD/UG ;THE/DB -.000733 (0) (0) (.0867) (.143) (1.07) (1.43) (2.61) (3.82) <-.000139>
ZD/UG ;PSI/DP -.00132 (0) (-.186) (.474) (.556) (.714) (4.30) [.415; 2.13]<.000401>

YD/VG ;PHI/DA .0506 (0) (.265) (.714) (1.91) [.998;.103][.609; 1.63]<.000514>
YD/VG ;THE/DB -.0281 (0) (.0430) (.0775) (.294) (1.07) (1.90) [.575; 3.11]<-.000539>
YD/VG ;PSI/DP -.0514 (.112) (.293) (.556) (.714) [.617; 1.64][.557; 3.10]<-.0173>

XD/WG ;PHI/DA -.00203 (0) (0) (.0776) (.120) (.714) (-1.66) (2.10) (-4.83) <-.000228>
YD/WG ;THE/DB -.00296 (0) (0) (.0727) (.376) (.924) (1.07) (2.23) (4.08) <-.000726>
XD/WG ;PSI/DP .00145 (0) (.337) (.556) (.714) (1.06) (-1.39) (3.89) (-5.59) <.00620>

ZD/WG ;PHI/DA .151 (0) (.0740) (.102) (.113) (.714) (2.09) [.605; 1.63]<.000514>
ZD/WG ;THE/DB -.0520 (0) (.0438) (.0709) (.384) (.960) (1.07) (2.22) (3.82) <-.000539>
ZD/WG ;PSI/DP -.103 (.112) (.356) (.556) (.714) (1.02) (3.95) [.636; 1.62]<-.0173>

XD/UG ; ZD/DC -.575 (0) (.0714) (.367) (.714) (.980) (2.15) (3.86) [.306; 1.82]<-.248>
YD/VG ; ZD/DC -.947 (0) (.0761) (.113) (.714) (1.96) [.620; 1.64][.559; 3.12]<-.298>

PHI/UG ;THE/DB ;PSI/DP .339E-4 (0) (-.223) (.305) (.556) (1.07) <-.137E-5>
THE/UG ;PHI/DA ;PSI/DP .00110 (0) (.0738) (.303) (.556) (.714) <.975E-5>
PSI/UG ;PHI/DA ;THE/DB -.908E-4 (0) (.100) (.304) (.556) (1.07) <-.164E-5>

PHI/VG ;THE/DB ;PSI/DP .00190 (0) (.0407) (.304) (.556) (1.07) <.140E-4>
THE/VG ;PHI/DA ;PSI/DP .000280 (0) (.0711) (.556) (.569) (.714) <.450E-5>
PSI/VG ;PHI/DA ;THE/DB .000436 (0) (.0369) (.296) (.556) (1.07) <.272E-5>

PHI/WG ;THE/DB ;PSI/DP -.000152 (0) (.0359) (.245) (.556) (1.07) <-.794E-6>
THE/WG ;PHI/DA ;PSI/DP -.000460 (0) (.0720) (.103) (.556) (.714) <-.135E-5>
PSI/WG ;PHI/DA ;THE/DB .174E-4 (0) (-.0290) (-.0559) (.556) (1.07) <.167E-7>

TABLE VI-5 CONTINUED
CH-53D TRANSFER FUNCTION FACTORS
CASE 182 HOVER AFCS ON

GUST NUMERATORS CONCLUDED:

```
PHI/PG ;THE/DB ;PSI/DP    .130 (.0433) (.0981) (.300) (.556) (1.07)<.978E-4>
THE/PG ;PHI/DA ;PSI/DP    .0320 (.0338) (.0763) (.284) (.556) (.714)<.928E-5>
PSI/PG ;PHI/DA ;THE/DB   -.00140 (.0448) (.290) (-.501) (.556) (1.07)<.541E-5>

PHI/QG ;THE/DB ;PSI/DP    .0406 (.301) (.556) (1.07)[.833;.0516]<.192E-4>
THE/QG ;PHI/DA ;PSI/DP   -.0969 (.0724) (.0864) (.300) (.556) (.714)<-.721E-4>
PSI/QG ;PHI/DA ;THE/DB    .0118 (.300) (.556) (1.07)[.863;.0710]<.105E-4>

PHI/RG ;THE/DB ;PSI/DP   -.0141 (.0430) (.0932) (.311) (.556) (1.07)<-.105E-4>
THE/RG ;PHI/DA ;PSI/DP    .00299 (.0379) (.0766) (-.129) (.556) (.714)<-.446E-6>
PSI/RG ;PHI/DA ;THE/DB   -.0337 (.0430) (.0761) (.297) (.556) (1.07)<-.194E-4>

 XD/UG ;PHI/DA ;THE/DB   -.00384 (0) (.0772) (.0982) (.299) (1.07) (2.09)<-.194E-4>
 XD/UG ;PHI/DA ;PSI/DP   -.0171 (.0756) (.301) (.556) (.714)[.306;1.82]<-.000513>
 XD/UG ;THE/DB ;PSI/DP    .00258 (.556) (.970) (1.07) (4.21)[.989;.320]<.000639>

 ZD/UG ;PHI/DA ;THE/DB   -.000382 (0) (0) (1.07) (2.78)[.986;.0862]<-.841E-5>
 ZD/UG ;PHI/DA ;PSI/DP   -.000664 (0) (-.165) (.556) (.714)[.446;1.68]<.000122>
 ZD/UG ;THE/DB ;PSI/DP    .000248 (0) (-.129) (.556) (1.07) (1.26) (4.19)<-.000100>

 YD/VG ;PHI/DA ;THE/DB   -.00913 (0) (.0418) (.0944) (.268) (1.07) (1.91)<-.194E-4>
 YD/VG ;PHI/DA ;PSI/DP   -.0164 (.111) (.265) (.556) (.714)[.609;1.63]<-.000513>
 YD/VG ;THE/DB ;PSI/DP    .00932 (.0409) (.294) (.556) (1.07)[.566;3.10]<.000639>

 XD/WG ;PHI/DA ;THE/DB   -.00156 (0) (0) (.0838) (.104) (1.07) (2.11)<-.307E-4>
 XD/WG ;PHI/DA ;PSI/DP    .000734 (0) (.0994) (.556) (.714) (-1.68) (-4.96)<.000236>
 XD/WG ;THE/DB ;PSI/DP    .00106 (0) (.354) (.556) (.901) (1.07) (4.49)<.000896>

 ZD/WG ;PHI/DA ;THE/DB   -.0271 (0) (.0433) (.0722) (.102) (1.07) (2.10)<-.194E-4>
 ZD/WG ;PHI/DA ;PSI/DP   -.0550 (.0763) (.116) (.556) (.714)[.607;1.63]<-.000513>
 ZD/WG ;THE/DP ;PSI/DP    .0184 (.0410) (.362) (.556) (.931) (1.07) (4.24)<.000639>

 XD/UG ; ZD/DC ;PHI/DA   -.300 (0) (.0740) (.0984) (.714) (2.06)[.306;1.82]<-.0106>
 XD/UG ; ZD/DC ;THE/DB    .0472 (0) (.0760) (.371) (.970) (1.07) (2.14) (3.86)<.0114>
 XD/UG ; ZD/DC ;PSI/DP    .203 (.355) (.556) (.714) (.962) (4.19)[.306;1.82]<.384>

 YD/VG ; ZD/DC ;PHI/DA   -.306 (0) (.0839) (.111) (.714) (1.97)[.609;1.63]<-.0106>
 YD/VG ; ZD/DC ;THE/DB    .172 (0) (.0438) (.0738) (1.07) (1.96)[.567;3.13]<.0114>
 YD/VG ; ZD/DC ;PSI/DP    .332 (.112) (.556) (.714)[.620;1.64][.553;3.11]<.384>

 XD/UG ;PHI/DA ;THE/DB ;PSI/DP    .00139 (.0793) (.297) (.556) (1.07)<.194E-4>
 ZD/UG ;PHI/DA ;THE/DB ;PSI/DP    .000136 (0) (-.162) (.556) (1.07)<-.131E-4>
 YD/VG ;PHI/DA ;THE/DB ;PSI/DP    .00297 (.0415) (.265) (.556) (1.07)<.194E-4>

 XD/WG ;PHI/DA ;THE/DB ;PSI/DP    .000575 (0) (.0901) (.556) (1.07)<.307E-4>
 ZD/WG ;PHI/DA ;THE/DB ;PSI/DP    .00992 (.0426) (.0774) (.556) (1.07)<.194E-4>
 XD/UG ; ZD/DC ;PHI/DA ;THE/DB    .0246 (0) (.0766) (.0981) (1.07) (2.05)<.000406>

 YD/VG ; ZD/DC ;PHI/DA ;THE/DB    .0553 (0) (.0412) (.0811) (1.07) (1.96)<.000406>
 YD/VG ; ZD/DC ;PHI/DA ;PSI/DP    .106 (.112) (.556) (.714)[.609;1.63]<.0125>
 XD/WG ; ZD/DC ;PHI/DA ;THE/DB    .0115 (0) (.0875) (.101) (1.07) (1.96)<.000213>

 XD/UG ; ZD/DC ;PHI/DA ;THE/DB ;PSI/DP   -.00893 (.0875) (.556) (1.07)<-.000463>
 YD/VG ; ZD/DC ;PHI/DA ;THE/DB ;PSI/DP   -.0191 (.0409) (.556) (1.07)<-.000463>
 XD/WG ; ZD/DC ;PHI/DA ;THE/DB ;PSI/DP   -.00383 (.0898) (.556) (1.07)<-.000204>
```

MICROFILMED FROM
BEST AVAILABLE COPY

TABLE VI-5 CONTINUED

CH-53D TRANSFER FUNCTION FACTORS

CASE 183 20KT AFCS OFF

DENOMINATOR: (0) (.314) (1.75)[-.458;.289]X[.799;.616]X[.0560;.965]<.0120>

CONTROL NUMERATORS:

PHI/DA .513 (0)[-.118;.231]X[.809;.532]X[.847;.638]<.00313>
THE/DB -.186 (0) (.0204) (.254) (.358) (1.94)[.0568;.926]<-.000566>
PSI/DP -.332 (1.78)[-.277;.315]X[.887;.523]X[-.0135;.688]<-.00757>

PHI/DB -.0893 (0) (.332) (-.608) (.710) (-2.04)[.274;.886]<-.0205>
PHI/DP .190 (0) (1.27) (-1.37)[-.269;.317]X[.897;.493]<-.00810>
PHI/DC -.0197 (0) (-1.65) (2.66)[-.391;.588]X[.987;.600]<.00923>

THE/DA .0885 (0) (.0289) (-.312) (.438)[.605;.679]<-.000139>
THE/DP -.0117 (0) (.00601) (-.0367) (.411) (1.43)[-.514;2.29]<.9358-5>
THE/DC .0331 (0) (.0803) (.141) (.609) (1.86)[.0410;1.13]<.000272>

PSI/DA .0324 (1.33)[-.207;.187]X[.857;.610]X[-.458;2.04]<.00233>
PSI/DB .0286 (.332) (-1.66) (2.06)[-.263;.789]X[.536;1.11]<-.0198>
PSI/DC .0909 (1.73)[-.817;.466]X[.930;.659]X[.0346;.769]<.00880>

YD/DB 1.51 (0) (.254) (.350) (2.00)[.0552;.990]X[.0381;1.96]<.891>
YD/DA .952 [-.0280;.217]X[.788;.583]X[.384;.588]X[.0611;8.13]<.0787>
ZD/DC -6.27 (0) (1.76)[-.722;.0725]X[.658;.601]X[.0373;.953]<-.0191>

YD/DC -.0908 (0) (.165) (.603) (1.93)[.0600;1.08]X[-.115;3.53]<-.252>
YD/DP 1.15 (-1.28) (1.29)[-.261;.316]X[.889;.687]X[.258;2.39]<-.256>
ZD/DB .658 (0) (.296) (-.473) (1.96)[.0438;.907]X[.188;1.98]<-.555>

PHI/DA ;THE/DB -.0961 (0) (.0231) (.375)[.847;.679]<-.000388>
PHI/DA ;PSI/DP -.176 (.0856)[-.260;.316]X[.906;.516]<-.000800>
THE/DB ;PSI/DP .0620 (.0177) (.378) (1.95)[-.0839;.681]<.000371>

PHI/DB ;PSI/DP .0250 (.102) (.363) (-2.09)[-.115;.268]<-.000139>
PHI/DP ;THE/DB -.0365 (0) (.0178) (.378) (1.18) (-1.39)<.000397>
PHI/DC ;THE/DB .00663 (0) (-.00357) (.452) (1.54) (-1.76)<.2908-4>

THE/DA ;PSI/DP -.0305 (.0283) (.318) (-.527) (.592)<.8588-4>
THE/DP ;PHI/DA -.00569 (0) (.0290) (.367)[.115;1.23]<-.9128-4>
THE/DC ;PHI/DA .0169 (0) (.0285) (.656)[.811;.751]<.000177>

PSI/DA ;THE/DB -.00586 (.0233) (.379) (1.76)[-.818;1.91]<-.000334>
PSI/DB ;PHI/DA .0155 (.0864) (.338) (-1.71)[.247;1.18]<-.00107>
PSI/DC ;THE/DB -.0177 (-.00300) (.460) (1.94)[-.0605;.704]<.2368-4>

PSI/DC ;PHI/DA .0473 (.0921)[-.130;.499]X[.981;.680]<.000502>
YD/DB ;PHI/DA .788 (0) (.367)[.847;.681]X[.0308;1.99]<.531>
YD/DB ;PSI/DP -.501 (.368) (2.00)[-.0829;.682]X[.0335;1.97]<-.667>

YD/DA ;THE/DB -.178 (.0234) (.372)[.377;.650]X[.0571;4.15]<-.0113>
YD/DA ;PSI/DP -.351 [-.285;.315]X[.908;.511]X[.0868;1.98]<-.185>
ZD/DC ;PHI/DA -3.22 (0) (-.129)[.278;.593]X[.842;.597]<.0505>

ZD/DC ;THE/DB 1.14 (0) (.0157) (.199) (1.94)[.0858;.923]<.0134>
ZD/DC ;PSI/DP 2.08 (.220) (1.79)[.190;.321]X[.0117;.685]<.0197>
YD/DC ;PHI/DA -.0447 (0) (.657)[.808;.747]X[-.0357;1.89]<-.200>

YD/DC ;THE/DB -.0112 (0) (.252) (.787) (2.06)[.0292;.803]<-.00829>
YD/DC ;PSI/DP .0308 (.709) (7.88)[-.103;.666]X[.0356;2.93]<.207>
YD/DP ;PHI/DA .809 (1.10) (-1.11)[-.253;.327]X[.938;.508]<-.0135>

YD/DP ;THE/DB -.216 (.0177) (.372) (1.19) (-1.29)[.269;2.39]<.0125>
ZD/DB ;PHI/DA .180 (0) (-.469)[.509;.696]X[.185;1.89]<-.267>
ZD/DB ;PSI/DP -.215 (-.402) (1.97)[-.0897;.668]X[.106;1.95]<.288>

PHI/DA ;THE/DB ;PSI/DP .0312 (.0171) (.0889) (.378)<.1818-8>
PHI/DC ;THE/DB ;PSI/DP .00127 (.0128) (.350) (-.882)<-.2518-5>
THE/DC ;PHI/DA ;PSI/DP -.00527 (.0275) (.0772) (.722)<-.8088-5>

TABLE VI-5 CONTINUED
CH-53D TRANSFER FUNCTION FACTORS

CASE 183 20KT AFCS OFF

CONTROL NUMERATORS CONCLUDED:

PSI/DC ;PHI/DA ;THR/DB -.00936 (.00223) (.111) (.479) <-.111E-5>

YD/DB ;PHI/DA ;PSI/DP -.269 (.0848) (.367) [.0319;2.00]<-.0335>
YD/DA ;THR/DB ;PSI/DP .0663 (.0176) (.372) [.0873;3.99]<.00690>
ZD/DC ;PHI/DA ;THR/DB .591 (0) (.0387) [.420;.661]<.00896>

ZD/DC ;THR/DB ;PSI/DP -.383 (.0251) (1.95) [-.0830;.682]<-.00872>
ZD/DC ;PHI/DA ;PSI/DP 1.11 (.157) (.201) [.220;.280]<.00292>
YD/DC ;PHI/DA ;THR/DB -.0178 (0) (.627) [.405;.712]<-.00553>

YD/DC ;PHI/DA ;PSI/DP .0178 (.0770) (.729) [-.0304;3.12]<.00241>
YD/DC ;THR/DB ;PSI/DP .00898 (.760) (1.71) [-.0786;.690]<.00558>
YD/DP ;PHI/DA ;THR/DB -.0767 (.0172) (.372) (1.11) (-1.12) <.000610>

ZD/DB ;PHI/DA ;PSI/DP -.116 (.0846) (-.395) [.112;1.92]<.0183>

ZD/DC ;PHI/DA ;THR/DB ;PSI/DP -.205 (.0232) (.0881) <-.300E20>
YD/DC ;PHI/DA ;THR/DB ;PSI/DP .00475 (.0762) (.693) <.000251>

GUST NUMERATORS:

PHI/UG -.00837 (0) (0) (0) (1.08) (-1.17) [.798;.827]<.00192>
THR/UG -.000985 (0) (0) (.386) (1.06) (3.81) [-.397;.532]<-.000378>
PSI/UG .0109 (0) (0) (1.80) [.787;.863][-.0350;.659]<.00182>

PHI/VG .0385 (0) (0) (.802) [-.386;.308][.842;.535]<.000375>
THR/VG .00808 (0) (0) [.183;.0318][.959;.815]<.137E-5>
PSI/VG -.0103 (0) (0) (.171) (-.282) (2.01) [.677;.610]<.000319>

PHI/WG -.00218 (0) (0) (-.506) (.659) (1.72) [-.0881;.686]<.000577>
THR/WG .00175 (0) (0) (.0351) (.191) (1.75) [-.0131;1.08]<.220E-4>
PSI/WG .00167 (0) (.978) (1.76) [-.585;.555][.221;.785]<.000566>

PHI/PG 1.51 (0) (-.187) (.160) [.303;.685][.808;.711]<-.00785>
THR/PG -.198 (0) (.0136) (.971) [.984;.858][-.365;1.07]<-.000601>
PSI/PG .181 (.146) (-.253) (1.51) [.729;.627][-.396;1.53]<-.00930>

PHI/QG 1.05 (0) (.369) (.580) [-.685;.588][.833;.795]<.0825>
THR/QG .357 (0) (.0287) (.195) (.366) (2.33) [.133;.868]<.00127>
PSI/QG -.0876 (.360) (-1.36) (2.76) [-.208;.525][.758;1.10]<.0396>

PHI/RG -.378 (0) (-1.01) (1.10) [-.298;.338][.895;.521]<.0127>
THR/RG .0182 (0) (.853) (1.26) [.311;.0271][-.665;2.46]<.461E-4>
PSI/RG .470 (1.79) [-.330;.338][.880;.541][.0208;.662]<.0120>

YD/UG .0325 (0) (.346) (.956) (2.58) [-.387;.482][.0331;1.37]<.0120>
ZD/UG .172 (0) (0) (.590) (1.83) [.150;.252][.138;1.08]<.0126>
YD/VG .179 (0) (.402) [-.383;.307][.836;.532][.232;2.51]<.0120>

YD/WG -.00631 (0) (0) (.208) (1.75) [.0188;1.02][-.186;3.02]<-.0219>
ZD/WG .363 (0) (1.75) [-.416;.275][.919;.518][.0616;.971]<.0120>

PHI/UG ;THR/DB .00147 (0) (0) (.350) (1.09) (-1.13) <-.000637>
PHI/UG ;PSI/DP .000704 (0) (-.110) (.508) [-.600;.189]<-.867E-6>
THR/UG ;PHI/DA -.000583 (0) (0) (1.01) [.416;.821]<-.972E-4>

THR/UG ;PSI/DP .000863 (0) (.575) (2.15) [-.0699;.681]<.000235>
PSI/UG ;PHI/DA .00588 (0) (-.00355) (.101) [.828;.820]<-.267E-5>
PSI/UG ;THR/DB -.00201 (0) (.350) (1.95) [-.0764;.662]<-.000402>

PHI/VG ;THR/DB -.00635 (0) (0) (.0173) [.988;.378]<-.153E-4>
PHI/VG ;PSI/DP -.00989 (0) [-.270;.317][.890;.898]<-.000236>
THR/VG ;PHI/DA .000611 (0) (0) (.0276) [.911;.527]<.869E-5>

THR/VG ;PSI/DP -.000181 (0) (.367) (6.64) [.201;.0305]<-.966E-6>
PSI/VG ;PHI/DA -.00681 (0) [-.281;.201][.826;.528]<-.727E-4>
PSI/VG ;THR/DB .00190 (0) (.377) (2.04) [.133;.0390]<.221E-5>

TABLE VI-5 CONTINUED

CH-53D TRANSFER FUNCTION FACTORS

CASE 183 20KT AFCS OFF

GUST NUMERATORS CONTINUED:

PHI/VG ;THE/DB .000553 (0) (0) (-.0747) (-.296) (.852) <.1088-4>
PHI/VG ;PSI/DP .000391 (0) (.233) (2.20)[-.207;.298]<.1788-4>
THE/VG ;PHI/DA .000881 (0) (0) (.0282)[.417;.706]<.1248-4>

THE/VG ;PSI/DP -.000556 (0) (.0272) (1.81)[-.180;.723]<-.1418-4>
PSI/VG ;PHI/DA .000928 (0) (.0990) (1.03)[-.281;.611]<.3548-4>
PSI/VG ;THE/DB -.000358 (0) (-.0418) (1.97)[.0637;.551]<.8878-5>

PHI/PG ;THE/DB -.298 (0) (.0117) (.375)[.856;.719]<-.000675>
PHI/PG ;PSI/DP -.535 (.0974)[-.283;.313][.936;.558]<-.00157>
THE/PG ;PHI/DA -.0993 (0) (.0163) (.378)[.852;.667]<-.000241>

THE/PG ;PSI/DP .0669 (.0132) (.360) (1.09)[-.483;1.05]<.000386>
PSI/PG ;PHI/DA .0480 (.0939) (.307) (-.992)[.399;.880]<-.000978>
PSI/PG ;THE/DB -.0289 (.0109) (.178) (1.80)[-.363;1.57]<-.000532>

PHI/QG ;THE/DB -.162 (0) (-.00802) (.365)[.490;.579]<.000160>
PHI/QG ;PSI/DP -.130 (.0239)[-.381;.313][.987;.389]<-.000117>
THE/QG ;PHI/DA .190 (0) (.0261) (.365)[.453;.673]<.000821>

THE/QG ;PSI/DP -.119 (.0230) (.370) (2.35)[-.0381;.590]<-.000828>
PSI/QG ;PHI/DA -.0789 (.0918) (.315) (-.955)[.408;.973]<.00206>
PSI/QG ;THE/DB .00753 (-.0109) (.368) (-1.12) (1.47) (3.62) <.000179>

PHI/RG ;THE/DB .0711 (0) (.0175) (.385) (-1.03) (1.05) <-.000517>
PHI/RG ;PSI/DP .0388 (.123)[-.287;.317][.419;.585]<.000127>
THE/RG ;PHI/DA .00675 (0) (.0275) (.473)[.202;1.38]<.000158>

THE/RG ;PSI/DP .00591 (.0190) (-.749)[.605;.676]<-.3858-4>
PSI/RG ;PHI/DA .251 (.0875)[-.281;.323][.892;.580]<.000675>
PSI/RG ;THE/DB -.0878 (.0175) (.385) (1.96)[-.0722;.652]<-.000891>

YD/DG ;PHI/DA .0175 (0) (.811)[.825;.403][.0660;1.17]<.00313>
YD/DG ;THE/DB -.00461 (0) (.251) (.385) (2.21)[.0683;.799]<-.000566>
YD/DG ;PSI/DP -.0107 (.547) (2.04)[-.0747;.632][.0885;1.26]<-.00757>

ZD/DG ;PHI/DA .0886 (0) (0)[.828;.253][.510;.762]<.00329>
ZD/DG ;THE/DB -.0311 (0) (0) (.338) (1.98)[.107;.931]<-.0178>
ZD/DG ;PSI/DP -.0564 (0) (1.81)[.351;.404][.0240;.692]<-.00795>

YD/VG ;PHI/DA .0591 (0) (.401)[-.325;.312][.847;.581]<.000675>
YD/VG ;THE/DB -.0332 (0) (.0173)[.989;.373][.242;2.48]<-.000891>
YD/VG ;PSI/DP -.0476 [-.268;.317][.883;.494][.223;2.55]<-.00757>

ZD/VG ;PHI/DA -.00308 (0) (0)[.816;.708][-.0339;1.06]<-.0181>
ZD/VG ;THE/DB -.00187 (0) (0) (.253) (2.26)[.0912;.888]<-.000602>
ZD/VG ;PSI/DP .00211 (0) (1.82)[-.126;.727][-.0878;2.88]<.0169>

ZD/VG ;PHI/DA .186 (0) (.458)[-.0915;.295][.883;.689]<.00313>
ZD/VG ;THE/DB -.0686 (0) (.0207) (.239) (1.98)[.0617;.927]<-.000566>
ZD/VG ;PSI/DP -.120 (.607) (1.77)[-.306;.385][-.0129;.700]<-.00757>

YD/DG ; ZD/DC -.188 (0) (-.0326) (-.625) (1.07) (2.78)[.0588;1.30]<-.0191>
YD/VG ; ZD/DC -1.12 (0)[.808;.150][.617;.188][.233;2.51]<-.0191>

PHI/DG ;THE/DB ;PSI/DP -.3688-4 (0) (.128) (.385) <-.8278-5>
THE/DG ;PHI/DA ;PSI/DP .000252 (0) (.0860) (.574) <.1248-4>
PSI/DG ;PHI/DA ;THE/DB -.00108 (0) (.0873) (.350) <-.3318-4>

PHI/VG ;THE/DB ;PSI/DP .00175 (0) (.0178) (.374) <.1168-4>
THE/VG ;PHI/DA ;PSI/DP -.000281 (0) (.0288) (.117) <-.2728-5>
PSI/VG ;PHI/DA ;THE/DB .00118 (0) (.0236) (.378) <.1058-4>

PHI/WG ;THE/DB ;PSI/DP -.000115 (0) (.0157) (.338) <-.6098-6>
THE/WG ;PHI/DA ;PSI/DP -.000292 (0) (.0267) (.0711) <-.5568-4>
PSI/WG ;PHI/DA ;THE/DB -.000200 (0) (.00355) (.161) <-.1168-6>

TABLE VI-5 CONTINUED
CH-53D TRANSFER FUNCTION FACTORS

CASE 183 20KT AFCS OFF

GUST NUMERATORS CONCLUDED:

PHI/PG ;THE/DB ;PSI/DP .105 (.0198) (.0967) (.174) <.6998-4>
THE/PG ;PHI/DA ;PSI/DP .0312 (.00281) (.0812) (.173) <.2652-5>
PSI/PG ;PHI/DA ;THE/DB -.00558 (.0605) (-.293) (.175) <.1598-4>

PHI/QG ;THE/DB ;PSI/DP .0527 (.0228) (.0864) (.174) <.2098-4>
THE/QG ;PHI/DA ;PSI/DP -.0662 (.0230) (.0812) (.165) <-.4518-4>
PSI/QG ;PHI/DA ;THE/DB .00901 (.404)[.460;.0870]<.2758-4>

PHI/RG ;THE/DB ;PSI/DP -.00647 (.0176) (.127) (.383) <-.5538-5>
THE/RG ;PHI/DA ;PSI/DP .000489 (.0103) (.0785) (-1.59) <-.5958-6>
PSI/RG ;PHI/DA ;THE/DB -.0476 (.0174) (.0885) (.185) <-.2898-4>

XD/UG ;PHI/DA ;THE/DB -.00244 (0) (.320)[.800;.702]<-.000384>
XD/UG ;PHI/DA ;PSI/DP -.00575 (.0867) (.547)[.0568;1.22]<-.000400>
XD/UG ;THE/DB ;PSI/DP .00130 (.310) (2.02)[-.0782;.676]<.000371>

ZD/UG ;PHI/DA ;THE/DB -.0162 (0) (0)[.568;.733]<-.00871>
ZD/UG ;PHI/DA ;PSI/DP -.0300 (0) (.0917)[.868;.391]<-.000426>
ZD/UG ;THE/DB ;PSI/DP .0102 (0) (1.95)[-.0853;.684]<.00915>

YD/VG ;PHI/DA ;THE/DB -.0110 (0) (.0176)[.966;.185]<-.2898-4>
YD/VG ;PHI/DA ;PSI/DP -.0152 [-.256;.329]][.928;.893]<-.000400>
YD/VG ;THE/DB ;PSI/DP .00885 (.0177) (.175)[.233;2.51]<.000371>

XD/WG ;PHI/DA ;THE/DB -.000778 (0) (0)[.419;.691]<-.000371>
XD/WG ;PHI/DA ;PSI/DP .00108 (0) (.0705)[-.0275;2.95]<.000664>
XD/WG ;THE/DB ;PSI/DP .000446 (0) (2.17)[-.0588;.649]<.000431>

ZD/WG ;PHI/DA ;THE/DB -.0355 (0) (.0234)[.460;.680]<-.000384>
ZD/WG ;PHI/DA ;PSI/DP -.0640 (.0878) (.597)[-.278;.386]<-.000400>
ZD/WG ;THE/DB ;PSI/DP .0228 (.0179) (1.95)[-.0882;.682]<.000371>

XD/UG ; ZD/DC ;PHI/DA -.102 (0) (-.501) (.918)[.232;1.04]<.0505>
XD/UG ; ZD/DC ;THE/DB .0340 (0) (.282) (2.20)[.0568;.799]<.0138>
XD/UG ; ZD/DC ;PSI/DP .0619 (1.95)[.0460;.598]][.0984;.960]<.0197>

YD/VG ; ZD/DC ;PHI/DA -.369 (0)[.789;.179]][.675;.332]<-.00130>
YD/VG ; ZD/DC ;THE/DB .201 (0) (.0294) (.319)[.283;2.89]<.0117>
YD/VG ; ZD/DC ;PSI/DP .100 (.210)[.209;.311]][.223;2.55]<.0197>

XD/UG ;PHI/DA ;THE/DB ;PSI/DP .000697 (.0838) (.309) <.1918-4>
ZD/UG ;PHI/DA ;THE/DB ;PSI/DP .00548 (0) (.0841) <.000463>
YD/VG ;PHI/DA ;THE/DB ;PSI/DP .00287 (.0172) (.365) <.1918-4>

YD/WG ;PHI/DA ;THE/DB ;PSI/DP .000242 (0) (.0683) <.1658-4>
ZD/WG ;PHI/DA ;THE/DB ;PSI/DP .0122 (.0171) (.0856) <.1818-4>
XD/UG ; ZD/DC ;PHI/DA ;THE/DB .0179 (0)[.398;.707]<.00896>

YD/VG ; ZD/DC ;PHI/DA ;THE/DB .0674 (0) (.0292) (.335) <.000661>
YD/VG ; ZD/DC ;PHI/DA ;PSI/DP .0956 (.323)[.101;.308]<.00292>
YD/WG ; ZD/DC ;PHI/DA ;THE/DB .0112 (0)[.395;.702]<.00553>

XD/UG ; ZD/DC ;PHI/DA ;THE/DB ;PSI/DP -.00510 (.0823) <-.000420>
YD/VG ; ZD/DC ;PHI/DA ;THE/DB ;PSI/DP -.0178 (.0216) <-.000420>
YD/WG ; ZD/DC ;PHI/DA ;THE/DB ;PSI/DP -.00125 (.0773) <-.000251>

TABLE VI-5 CONTINUED
CH-53D TRANSFER FUNCTION FACTORS

CASE 183 20KT AFCS ON

DENOMINATOR: (0) (.0387) (.354) (.718) (1.30)[.796;.432]X[.606;1.72]X[.993;2.85]<.0828>

CONTROL NUMERATORS:

PHI/DA .513 (0) (.0361) (.352) (.718) (1.95)[.589;.366]X[.561;1.72]<.00359>
THE/DB -.186 (0) (.0229) (.376) (1.07) (1.21) (2.06) (3.23)[.786;.827]<-.00250>
PSI/DP -.332 (.0412) (.315) (.358) (.556) (.718) (1.28) (1.28)[.599;1.73]<-.00795>

PHI/DB -.0891 (0) (.122) (.428) (-.576) (1.07) (1.74) (-2.06)[.391;.678]<-.0125>
PHI/DP .190 (0) (.0831) (.352) (.556) (.718) (1.08) (-1.66)[.578;1.71]<-.00577>
PHI/DC -.0197 (0) (.0789) (.393) (.718) (-2.63)[.890;.755]X[.587;2.38]<.00358>

THE/DA .0875 (0) (.0246) (-.178) (.602) (.718) (1.99)[.916;.282]<-.552E-4>
THE/DP -.0137 (0) (.0316) (.319) (.556) (.718)[.970;.916]X[-.0386;2.72]<-.000138>
THE/DC .0331 (0) (.0296) (.718) (.781) (.973)[.820;.855]X[.926;2.65]<.000775>

PSI/DA .0324 (.0352) (.353) (.556) (.718) (1.89)[.896;1.75]X[-.818;2.02]<.00297>
PSI/DB .0246 (.261) (.359) (.566) (1.07) (1.17) (-1.55) (8.88)[.284;1.12]<-.0178>
PSI/DC .0909 (.0729) (.168) (.473) (.563) (.718) (1.23) (3.02)[.636;1.79]<.00539>

ID/DB 1.51 (0) (.169) (1.07) (1.17) (1.99) (3.44)[.788;.832]X[.0238;1.99]<1.52>
YD/DA .952 (.0346) (.350) (.718) (1.97)[.838;.352]X[.568;1.73]X[.0665;8.09]<.100>
ID/DC -6.27 (0) (.0226) (.718) (1.28)[.797;.826]X[.595;1.72]X[.990;2.86]<-.621>

ID/DC -.0908 (0) (.718)[.827;.834]X[.986;.851]X[-.686;2.69]X[.878;2.72]<-.881>
YD/DP 1.15 (.0832) (.351) (.556) (.718) (1.05) (-1.33)[.579;1.69]X[.567;3.18]<-.268>
ID/DB .658 (0) (-.452) (1.07) (1.19) (2.17) (3.16)[.817;.887]X[.161;1.89]<-1.84>

PHI/DA ;THE/DB -.0961 (0) (.0232) (.374) (1.07) (1.98)[.537;.360]<-.000228>
PHI/DA ;PSI/DP -.176 (.0880) (.0845) (.352) (.556) (.718)[.562;1.71]<-.000269>
THE/DB ;PSI/DP .0620 (.0176) (.315) (.372) (.556) (1.07) (1.18) (3.65)<.000326>

PHI/DB ;PSI/DP .0250 (.102) (.363) (.556) (1.07) (-2.09)[-.115;.268]<-.922E-4>
PHI/DP ;THE/DB -.0365 (0) (.0177) (.378) (.556) (1.01) (1.07) (-1.66)<.000241>
PHI/DC ;THE/DB .00461 (0) (-.00380) (.409) (1.07) (-2.85)[.902;.830]<.169E-4>

THE/DA ;PSI/DP -.0305 (.0283) (.319) (-.527) (.556) (.592) (.718)<.340E-4>
THE/DP ;PHI/DA -.00569 (0) (.0290) (.367) (.556) (.718)[.115;1.23]<-.362E-4>
THE/DC ;PHI/DA .0169 (0) (.0285) (.718) (.741) (1.73)[.557;.400]<.704E-4>

PSI/DA ;THE/DB -.00586 (.0233) (.379) (.556) (1.07) (1.76)[-.818;1.91]<-.000198>
PSI/DB ;PHI/DA .0155 (.0868) (.338) (.571) (1.07) (-1.57)[.320;1.21]<-.000633>
PSI/DC ;THE/DB -.0177 (0) (.330) (.588) (.556) (1.07) (1.13) (3.58)<-.00768>

PSI/DC ;PHI/DA .0473 (.0573) (.152) (.411) (.559) (.718)[.584;1.74]<.000206>
ID/DB ;PHI/DA .788 (0) (.367) (1.07) (1.97)[.582;.361]X[.0304;2.00]<.315>
ID/DB ;PSI/DP -.501 (.116) (.367) (.556) (1.07) (1.15) (3.77)[.0263;1.99]<-.592>

YD/DA ;THE/DB -.178 (.0234) (.372) (1.07) (1.98)[.820;.387]X[.0652;8.12]<-.00668>
YD/DA ;PSI/DP -.351 (.0412) (.351) (.556) (.718)[.563;1.72]X[.0849;3.98]<-.0996>
ID/DC ;PHI/DA -3.22 (0) (.0203) (.718) (1.92)[.538;.362]X[.552;1.72]<-.0388>

ID/DC ;THE/DB 1.18 (0) (.0353) (1.07) (1.20) (2.03) (3.28)[.787;.818]<.0584>
ID/DC ;PSI/DP 2.08 (.0120) (.319) (.556) (.718) (1.26) (1.31)[.588;1.71]<.106>
ID/DC ;PHI/DA -.0887 (0) (.718) (.751) (1.78)[.560;.801]X[-.633;2.58]<-.0856>

ID/DC ;THE/DB -.0332 (0) (.605) (1.07) (8.18)[.768;.506]X[.918;1.26]<-.0360>
ID/DC ;PSI/DP .0308 (.317) (.556) (.718) (8.68)[.981;.856]X[-.895;2.30]<.0699>
YD/DP ;PHI/DA .809 (.0836) (.356) (.556) (.718) (1.10) (-1.12)[.568;1.71]<-.00909>

YD/DP ;THE/DB -.216 (.0176) (.372) (.556) (1.01) (1.07) (-1.32)[.562;3.1]<.0110>
ID/DB ;PHI/DA .380 (0) (-.452) (1.07) (2.05)[.587;.368]X[.111;1.89]<-.159>
ID/DB ;PSI/DP -.216 (.321) (-.397) (.556) (1.07) (1.18) (1.67)[.117;1.93]<.255>

PHI/DA ;THE/DB ;PSI/DP .0332 (.0171) (.0889) (.378) (.556) (1.07)<.1078-4>
PHI/DC ;THE/DB ;PSI/DP .00127 (.0128) (.350) (-.882) (.556) (1.07)<-.1899-5>
THE/DC ;PHI/DA ;PSI/DP -.00527 (.0275) (.0772) (.556) (.718) (.722)<-.3219-5>

TABLE VI-5 CONTINUED
CH-53D TRANSFER FUNCTION FACTORS

CASE 183 20KT AFCS ON

CONTROL NUMERATORS CONCLUDED:.

```
 PSI/DC ;PHI/DA ;THE/DB  -.00936 (.00223) (.111) (.879) (.556) (1.07)<-.6588-6>

  ID/DB ;PHI/DA ;PSI/DP  -.269 (.0848) (.367) (.556) (1.07)[ .0319;2.00 ]<-.0199>
  YD/DA ;THE/DB ;PSI/DP   .0663 (.0176) (.372) (.556) (1.07)[ .0873;3.99 ]<.00409>
  ZD/DC ;PHI/DA ;THE/DB   .591 (0) (.0348) (1.07) (1.95)[ .519;.352 ]<.00531>

  ZD/DC ;THE/DB ;PSI/DP  -.383 (.0286) (.318) (.556) (1.07) (1.18) (3.66)<-.00764>
  ZD/DC ;PHI/DA ;PSI/DP   1.11 (.0383) (.0837) (.556) (.718)[ .553;1.72 ]<.00173>
  ID/DC ;PHI/DA ;THE/DB  -.0178 (0) (.712) (1.07) (1.56)[ .553;.399 ]<-.00328>

  ID/DC ;PHI/DA ;PSI/DP   .0178 (.0775) (.556) (.718) (.732)[ -.518;2.37 ]<.00220>
  ID/DC ;THE/DB ;PSI/DP   .00898 (.112) (.556) (.601)[ 1.07) (1.46) (3.28)<.00428>
  YD/DP ;PHI/DA ;THE/DB  -.0767 (.0172) (.372) (.556) (1.07) (1.11) (-1.12)<.000362>

  ZD/DB ;PHI/DA ;PSI/DP  -.116 (.0846) (-.395) (.556) (1.07)[ .112;1.92 ]<.00846>

  ZD/DC ;PHI/DA ;THE/DB ;PSI/DP  -.205 (.0232) (.0881) (.556) (1.07)<-.000249>
  ID/DC ;PHI/DA ;THE/DB ;PSI/DP   .00475 (.0762) (.556) (.693) (1.07)<.000189>
```

GUST NUMERATORS:

```
 PHI/UG  -.00837 (0) (0) (.337) (.507) (.718) (1.21) (-1.25)[ .589;1.60 ]<.00400>
 THE/UG  -.000945 (0) (0) (.567) (.718) (7.24)[ .618;.358 ][ .985;1.21 ]<-.000517>
 PSI/UG   .0109 (0) (.288) (.356) (.555) (.718) (1.29) (3.40)[ .585;1.71 ]<.00569>

 PHI/VG   .0345 (0) (0) (.351) (.718) (1.70)[ .974;.0683 ][ .586;1.69 ]<.000197>
 THE/VG   .0120 (0) (0) (.0285) (.718) (.747) (1.78)[ .973;.242 ]<.1902-8>
 PSI/VG  -.0101 (0) (.0365) (.353) (.556) (.718) (1.37) (4.44)[ .567;1.71 ]<-.000937>

 PHI/WG  -.00214 (0) (0) (.180) (-.325) (.477) (.718) (1.10)[ .796;2.17 ]<.000172>
 THE/WG   .00175 (0) (0) (.0291) (.718) (1.26)[ .900;.449 ][ .961;2.85 ]<.5548-8>
 PSI/WG   .00167 (0) (.0951) (.360) (.585) (.718) (1.28) (3.31)[ .699;1.83 ]<.000316>

 PHI/PG   1.51 (0) (.00240) (.351) (.718) (2.03)[ .606;.398 ][ .609;1.78 ]<.000866>
 THE/PG  -.198 (0) (.0157) (.827) (.718) (2.01)[ .862;.405 ][ .685;1.93 ]<-.00115>
 PSI/PG   .181 (-.0292) (.353) (.558) (.718) (1.56)[ -.0376;1.35 ][ .628;1.76 ]<-.006511>

 PHI/QG   1.05 (0) (.187) (.355) (.718) (1.82)[ .273;.300 ][ .811;1.59 ]<.0162>
 THE/QG   .357 (0) (.0265) (.358) (.718) (1.03) (1.98) (4.12)[ .758;.820 ]<.00359>
 PSI/QG  -.0876 (.114) (.354) (.559) (-.611) (.718) (1.41) (7.19)[ .399;1.55 ]<.0210>

 PHI/RG  -.378 (0) (.0479) (.361) (.878) (.718) (-1.09) (1.22)[ .567;1.70 ]<.00800>
 THE/RG   .0192 (0) (.0289) (.718) (.960) (1.13)[ .988;.408 ][ -.298;3.00 ]<.0006133>
 PSI/RG   .470 (.0478) (.297) (.353) (.556) (.718) (1.29) (3.38)[ .595;1.73 ]<.0122>

  XD/UG   .0325 (0) (.440) (.718) (5.07)[ .731;.817 ][ .987;1.21 ][ .357;1.79 ]<.0828>
  ZD/UG   .172 (0) (0) (.718) (1.12) (2.11) (2.94)[ .819;.453 ][ .585;1.75 ]<.633>
  YD/VG   .179 (0) (.0589) (.0878) (.349) (.718) (1.70)[ .555;1.67 ][ .510;3.15 ]<.0107>

  XD/WG  -.00631 (0) (0) (.718) (1.25)[ .810;.881 ][ -.562;2.38 ][ .980;2.83 ]<-.0365>
  ZD/WG   .361 (0) (.0179) (.718) (1.31)[ .800;.833 ][ .616;1.71 ][ .998;2.86 ]<.0828>

 PHI/UG ;THE/DB   .00187 (0) (0) (.351) (.501) (1.07) (1.13) (-1.25)<-.000387>
 PHI/UG ;PSI/DP   .000704 (0) (.117) (.379) (.556) (.718)[ .297;1.88 ]<.2588-8>
 THE/UG ;PHI/DA  -.000543 (0) (0) (.570) (.718) (2.75)[ .846;.252 ]<-.3868-8>

 THE/UG ;PSI/DP   .000863 (0) (.315) (.556) (.572) (.718) (1.06) (8.06)<.000182>
 PSI/UG ;PHI/DA   .00588 (0) (.0871) (.343) (.555) (.718)[ .554;1.71 ]<.000203>
 PSI/UG ;THE/DB  -.00201 (0) (.301) (.348) (.556) (1.07) (1.19) (3.70)<-.000552>

 PHI/VG ;THE/DB  -.00635 (0) (0) (.0148) (.0950) (.373) (1.07) (1.69)<-.6018-5>
 PHI/VG ;PSI/DP  -.00349 (0) (.0430) (.352) (.556) (.718)[ .581;1.70 ]<-.000165>
 THE/VG ;PHI/DA   .000611 (0) (0) (.0275) (.206) (.287) (.718) (2.62)<.1968-5>

 THE/VG ;PSI/DP  -.00400 (0) (.0301) (.319) (.556) (.718) (.721)<-.1109-8>
 PSI/VG ;PHI/DA  -.00681 (0) (.0355) (.353) (.557) (.718)[ .551;1.71 ]<-.9328-8>
 PSI/VG ;THE/DB   .00190 (0) (.0242) (.379) (.556) (1.07) (1.36) (8.51)<.6328-8>
```

TABLE VI-5 CONTINUED
CH-53D TRANSFER FUNCTION FACTORS

CASE 183 20KT AFCS ON

GUST NUMERATORS CONTINUED:

```
  PHI/WG ;THE/DB   .000553 (0) (0) (-.0781) (-.220) (.445) (1.07) (1.83) <.618E-5>
  PHI/WG ;PSI/DP   .000391 (0) (.0457) (.407) (.556) (.718) (1.22) (3.06) <.108E-4>
  THE/WG ;PHI/DA   .000881 (0) (0) (.0282) (.714) (1.90)[.524;.382]<.492E-5>

  THE/WG ;PSI/DP  -.000556 (0) (.0271) (.315) (.556) (.718) (1.28) (3.27) <-.786E-5>
  PSI/WG ;PHI/DA   .000928 (0) (.0534) (.250) (.543) (.714)[.635;1.75 ]<.187E-4>
  PSI/WG ;THE/DB  -.000358 (0) (-.0136) (.325)(.556) (1.07) (1.25) (3.98) <.858E-5>

  PHI/PG ;THE/DB  -.298 (0) (.0118) (.378) (1.07) (2.01)[.571;.377]<-.0003B9>
  PHI/PG ;PSI/DP  -.535 (.0479) (.0961) (.352) (.556) (.718)[.603;1.75 ]<-.00105>
  THE/PG ;PHI/DA  -.0893 (0) (.0164) (.374) (.714) (2.00)[.525;.351]<-.963E-4>

  THE/PG ;PSI/DP   .0669 (.0109) (.317) (.458) (.556) (.718)[.668;1.97]<.000168>
  PSI/PG ;PHI/DA   .0880 (.0761) (.386) (-.581) (.563) (.718)[.441;1.56 ]<-.000612>
  PSI/PG ;THE/DB  -.0289 (.00380) (.379) (.556) (1.07) (1.89)[-.0128;1.85 ]<-.984E-4>

  PHI/QG ;THE/DB  -.162 (0) (-.00866) (.372) (1.07) (1.89)[.527;.312 ]<.000103>
  PHI/QG ;PSI/DP  -.330 (.0233) (.0639) (.353) (.556) (.718)[.415;1.59 ]<-.000174>
  THE/QG ;PHI/DA   .190 (0) (.0261) (.365) (.714) (1.99)[.537;.355 ]<.000326>

  THE/QG ;PSI/DP  -.119 (.0230) (.308) (.338) (.556) (.718) (1.01) (8.85) <-.000506>
  PSI/QG ;PHI/DA  -.0789 (.0736) (-.336) (.387) (.567) (.714)[.400;1.58 ]<.000688>
  PSI/QG ;THE/DB   .0761 (-.0373) (-.269) (.380) (.556) (1.07) (1.56) <.000268>

  PHI/RG ;THE/DB   .0711 (0) (.0175) (.386) (.880) (1.07) (-1.09) (1.18) <-.000315>
  PHI/RG ;PSI/DP   .0348 (.0460) (.130) (.381) (.556) (.718)[.583;1.73 ]<.883E-4>
  THE/RG ;PHI/DA   .00675 (0) (.0276) (.718)[.900;.888][.168;1.55 ]<.629E-4>

  THE/RG ;PSI/DP   .00892 (.0178) (.316) (.556) (.718) (.853) (-1.06) <-.176E-4>
  PSI/RG ;PHI/DA   .251 (.0870) (.0895) (.357) (.556) (.718)[.561;1.72 ]<.000888>
  PSI/RG ;THE/DB  -.0878 (.0176) (.293) (.385) (.556) (1.07) (1.20) (3.72) <-.000861>

   ID/UG ;PHI/DA   .0175 (0) (.440) (.718) (2.14)[.558;.321][.356;1.73 ]<.00359>
   ID/UG ;THE/DB  -.00861 (0) (.318) (1.07) (4.26)[.736;.507][.990;1.21 ]<-.00250>
   ID/UG ;PSI/DP  -.0107 (.316) (.434) (.556) (.718) (1.11) (1.81)[.358;1.80 ]<-.00795>

   ZD/UG ;PHI/DA   .0896 (0) (0) (.718) (2.12)[.602;.371][.585;1.72 ]<.0586>
   ZD/UG ;THE/DB  -.0313 (0) (0) (1.07) (1.21) (2.21) (3.19)[.819;.857]<-.0597>
   ZD/UG ;PSI/DP  -.0568 (0) (.319) (.556) (.718) (1.25) (3.33)[.579;1.78 ]<-.0900>

   YD/VG ;PHI/DA   .0591 (0) (.0491) (.126) (.382) (.714) (1.69)[.555;1.72 ]<.000888>
   YD/VG ;THE/DB  -.0312 (0) (.0161) (.107) (.370) (1.07) (1.69)[.510;3.09 ]<-.000368>
   YD/VG ;PSI/DP  -.0876 (.0432) (.351) (.554) (.718)[.589;1.66][.495;3.17 ]<-.00795>

   YD/WG ;PHI/DA  -.00108 (0) (0) (.718) (1.91)[.528;.382][-.880;2.38 ]<-.00333>
   YD/WG ;THE/DB  -.00187 (0) (0) (1.03) (1.07) (1.60) (8.21)[.755;.878]<-.00288>
   YD/WG ;PSI/DP   .00211 (0) (.317) (.556) (.718) (1.27) (3.26)[-.501;2.27]<.00566>

   ZD/WG ;PHI/DA   .186 (0) (.0158) (.718) (1.96)[.558;.365][.570;1.71 ]<.00359>
   ZD/WG ;THE/DB  -.0686 (0) (.0232) (1.07) (1.21) (2.07) (3.21)[.795;.827]<-.00250>
   ZD/WG ;PSI/DP  -.120 (.0425) (.319) (.556) (.718) (1.28) (3.29)[.609;1.71 ]<-.00795>

   ID/UG ; ZD/DC  -.199 (0) (.718) (5.85)[.751;.359][.971;1.18][.819;1.85 ]<-.821>
   YD/VG ; ZD/DC  -1.92 (0) (.0366) (.0815) (.718) (1.68)[.585;1.67][.510;1.15]<-.111>

  PHI/UG ;THE/DB ;PSI/DP  -.968E-4 (0) (.128) (.385) (.556) (1.07) <-.253E-5>
  THE/UG ;PHI/DA ;PSI/DP   .000252 (0) (.0860) (.556) (.574) (.718) <.894E-5>
  PSI/UG ;PHI/DA ;THE/DB  -.00108 (0) (.0873) (.350) (.556) (1.07) <-.196E-4>

  PHI/VG ;THE/DB ;PSI/DP   .00175 (0) (.0178) (.174) (.556) (1.07) <.687E-5>
  THE/VG ;PHI/DA ;PSI/DP  -.000281 (0) (.0288) (.117) (.556) (.718) <-.108E-5>
  PSI/VG ;PHI/DA ;THE/DB   .00118 (0) (.0236) (.178) (.556) (1.07) <.628E-5>

  PHI/WG ;THE/DB ;PSI/DP  -.000115 (0) (.0157) (.318) (.556) (1.07) <-.361E-6>
  THE/WG ;PHI/DA ;PSI/DP  -.000292 (0) (.0267) (.0711) (.556) (.718) <-.220E-4>
  PSI/WG ;PHI/DA ;THE/DB  -.000200 (0) (.00155) (.163) (.556) (1.07) <-.685E-7>
```

TABLE VI-5 CONTINUED

CH-53D TRANSFER FUNCTION FACTORS

CASE 183 20KT AFCS ON

GUST NUMERATORS CONCLUDED:

PHI/PG ;THE/DB ;PSI/DP .105 (.0184) (.0967) (.374) (.556) (1.07) <.818E-4>
THE/PG ;PHI/DA ;PSI/DP .0312 (.00281) (.0812) (.373) (.556) (.714) <.105E-5>
PSI/PG ;PHI/DA ;THE/DB -.00558 (.0605) (-.293) (.375) (.556) (1.07) <.219E-4>

PHI/QG ;THE/DB ;PSI/DP .0527 (.0228) (.0464) (.374) (.556) (1.07) <.128P-4>
THE/QG ;PHI/DA ;PSI/DP -.0662 (.0230) (.0812) (.365) (.556) (.714) <-.179E-4>
PSI/QG ;PHI/DA ;THE/DB .00901 (.403) (.556) (1.07)[.460;.0870]<.163E-4>

PHI/RG ;THE/DB ;PSI/DP -.00647 (.0176) (.127) (.383) (.556) (1.07) <-.328E-5>
THE/RG ;PHI/DA ;PSI/DP .000489 (.0103) (.0745) (.556) (.714) (-1.59) <-.216E-6>
PSI/RG ;PHI/DA ;THE/DB -.0476 (.0178) (.0885) (.385) (.556) (1.07) <-.171E-4>

YD/TG ;PHI/DA ;THE/DB -.00248 (0) (.115) (1.07) (1.69)[.527;.406]<-.000228>
YD/TG ;PHI/DA ;PSI/DP -.00575 (.0853) (.438) (.556) (.714)[.350;1.79]<-.000269>
YD/TG ;THE/DB ;PSI/DP .00130 (.556) (1.07) (1.13) (3.79)[.999;.315]<.000326>

ZD/TG ;PHI/DA ;THE/DB -.0162 (0) (0) (1.07) (2.10)[.602;.377]<-.00517>
ZD/TG ;PHI/DA ;PSI/DP -.0300 (0) (.0847) (.556) (.714)[.586;1.72]<-.00300>
ZD/TG ;THE/DB ;PSI/DP .0102 (0) (.316) (.556) (1.07) (1.18) (3.66) <.00826>

YD/VG ;PHI/DA ;THE/DB -.0110 (0) (.0177) (.114) (.359) (1.07) (1.71) <-.171E-4>
YD/VG ;PHI/DA ;PSI/DP -.0152 (.0836) (.389) (.556) (.714)[.558;1.71]<-.000269>
YD/VG ;THE/DB ;PSI/DP .00885 (.0176) (.372) (.556) (1.07)[.515;1.09]<.000326>

YD/WG ;PHI/DA ;THE/DB -.000778 (0) (0) (1.07) (1.82)[.524;.382]<-.000220>
YD/WG ;PHI/DA ;PSI/DP .00108 (0) (.0718) (.556) (.714)[-.837;2.29]<.000162>
YD/WG ;THE/DB ;PSI/DP .000486 (0) (.313) (.556) (1.04) (1.07) (4.09) <.000358>

ZD/WG ;PHI/DA ;THE/DB -.0355 (0) (.0235) (1.07) (1.99)[.583;.359]<-.000228>
ZD/WG ;PHI/DA ;PSI/DP -.0640 (.0435) (.0842) (.556) (.714)[.571;1.70]<-.000269>
ZD/WG ;THE/DB ;PSI/DP .0229 (.0177) (.316) (.556) (1.07) (1.18) (3.66) <.000326>

YD/TG ; ZD/DC ;PHI/DA -.102 (0) (.714) (2.15)[.601;.277][.859;1.70]<-.0388>
YD/TG ; ZD/DC ;THE/DB .0340 (0) (1.07) (4.24)[.739;.512][.981;1.20]<.0588>
YD/TG ; ZD/DC ;PSI/DP .0619 (.320) (.556) (.713) (1.16) (3.65)[.863;1.78]<.106>

YD/VG ; ZD/DC ;PHI/DA -.368 (0) (.0318) (.110) (.714) (1.67)[.585;1.72]<-.00456>
YD/VG ; ZD/DC ;THE/DB .203 (0) (.0291) (.0849) (1.07) (1.68)[.529;1.09]<.00858>
YD/VG ; ZD/DC ;PSI/DP .309 (.0320) (.556) (.714)[.580;1.67][.898;3.17]<.106>

YD/WG ;PHI/DA ;THE/DB ;PSI/DP .000697 (.0838) (.389) (.556) (1.07) <.107E-4>
ZD/WG ;PHI/DA ;THE/DB ;PSI/DP .00549 (0) (.0843) (.556) (1.07) <.000278>
YD/VG ;PHI/DA ;THE/DB ;PSI/DP .00287 (.0172) (.365) (.556) (1.07) <.107E-4>

YD/WG ;PHI/DA ;THE/DB ;PSI/DP .000342 (0) (.0683) (.556) (1.07) <.980P-5>
ZD/WG ;PHI/DA ;THE/DB ;PSI/DP .0122 (.0171) (.0856) (.556) (1.07) <.107E-4>
YD/WG ; ZD/DC ;PHI/DA ;THE/DB .0439 (0) (1.07) (1.67)[.532;.408]<.00531>

YD/TG ; ZD/DC ;PHI/DA ;THE/DB .0674 (0) (.0304) (.105) (1.07) (1.70) <.000392>
YD/VG ; ZD/DC ;PHI/DA ;PSI/DP .0956 (.0333) (.556) (.714)[.588;1.72]<.00173>
YD/WG ; ZD/DC ;PHI/DA ;THE/DB .0112 (0) (1.07) (1.69)[.527;.407]<.00328>

YD/TG ; ZD/DC ;PHI/DA ;THE/DB ;PSI/DP -.00510 (.0821) (.556) (1.07) <-.000249>
YD/VG ; ZD/DC ;PHI/DA ;THE/DB ;PSI/DP -.0178 (.0216) (.556) (1.07) <-.000289>
YD/WG ; ZD/DC ;PHI/DA ;THE/DB ;PSI/DP -.00325 (.0773) (.556) (1.07) <-.000149>

MICROFILMED FROM
BEST AVAILABLE COPY

TABLE VI-5 CONTINUED
CH-53D TRANSFER FUNCTION FACTORS
CASE 185 40KT AFCS OFF

DENOMINATOR: (0) (.145) (1.64)[-.321;.595]X[.934;.733]X[.178;.698]<.0365>

CONTROL NUMERATORS:

PHI/DA .500 (0)[-.325;.612]X[.943;.707]X[.381;.781]<.0571>
THE/DB -.172 (0) (-.0602) (.137) (.586) (1.82)[.166;.876]<.00116>
PSI/DP -.341 (1.66)[-.0412;.512]X[-.317;.571]X[.944;.729]<-.0257>

PHI/DB -.0788 (0) (.352) (-.645) (.709) (-1.43)[.240;.727]<-.00957>
THE/DA .0774 (0) (-.0105) (-.247) (.607)[.455,.758]<.699E-4>

PHI/DA ;THE/DB -.0865 (0) (-.0587) (.587)[.375;.782]<.00182>
PHI/DA ;PSI/DP -.177 (.0443)[-.325;.612]X[.949;.709]<-.00147>
THE/DB ;PSI/DP .0587 (-.0607) (.586) (1.82)[-.0579;.465]<-.000825>

PHI/DB ;PSI/DP .0248 (.0149) (.271) (-.538) (.604) (-1.41)<.000107>
PHI/DP ;THE/DB -.0361 (0) (-.0607) (.586) (1.13) (-1.20)<-.00174>
PHI/DC ;THE/DB -.00131 (0) (-.0708) (.711)[.155;2.18]<.000314>

THE/DA ;PSI/DP -.0272 (.00645) (.311) (-.470) (.624)<.160E-4>
THE/DP ;PHI/DA -.00345 (0) (.00753) (.558)[.202;1.64]<-.391E-4>
THE/DC ;PHI/DA .0122 (0) (-.0215) (1.08)[.367;.806]<-.000183>

PSI/DA ;THE/DB -.00489 (-.0586) (.590) (1.72)[-.394;1.69]<.000833>
PSI/DB ;PHI/DA .00728 (.0541) (.430) (-2.17)[-.205;.634]<-.000147>
ID/DB ;PHI/DA .716 (0) (.565)[.379;.783]X[.0226;2.00]<.996>

YD/DA ;THE/DB -.156 (-.0587) (.586)[.338;.767]X[.0310;4.22]<.0562>
ZD/DB ;PHI/DA .805 (0) (-.147)[.376;.789]X[.0786;2.04]<-.308>
ID/DC ;PHI/DA -.101 (0) (1.01)[.368;.807]X[-.0829;2.06]<-.283>

YD/DP ;THE/DB -.204 (-.0607) (.586) (1.13) (-1.18)[.257;2.40]<-.0557>
ZD/DC ;PHI/DA -3.26 (0) (.615)[-.204;.670]X[.393;.773]<-.538>

PHI/DA ;THE/DB ;PSI/DP .0306 (.0442) (-.0597) (.586)<-.672E-4>
PHI/DC ;THE/DB ;PSI/DP .00143 (-.0432) (-.187) (.621)<.565E-5>
THE/DC ;PHI/DA ;PSI/DP -.00421 (-.0265) (.0414) (1.09)<.506E-5>

PSI/DC ;PHI/DA ;THE/DB -.00232 (-.0635) (.111) (.870)<.144E-4>
ID/DB ;PHI/DA ;PSI/DP -.252 (.0441) (.565)[.0240;2.01]<-.0253>
YD/DA ;THE/DB ;PSI/DP .0591 (-.0595) (.585)[.0260;4.07]<-.0340>

ZD/DC ;PHI/DA ;THE/DB .545 (0) (-.0557)[.372;.774]<-.0182>
ZD/DC ;PHI/DA ;PSI/DP 1.15 (.0470) (.644)[-.204;.660]<.0152>
ID/DC ;PHI/DA ;THE/DB -.00889 (0)[.385;.812]<-.005866>

ID/DC ;PHI/DA ;PSI/DP .0362 (.0390) (1.02)[-.0799;2.03]<.00597>
YD/DP ;PHI/DA ;THE/DB -.0697 (-.0599) (.577) (-1.13) (1.17)<-.00319>
ZD/DB ;PHI/DA ;PSI/DP -.241 (.0439) (-.142)[.0745;2.06]<.00753>

ZD/DC ;PHI/DA ;THE/DB ;PSI/DP -.193 (.0463) (-.0575)<.000513>
ID/DC ;PHI/DA ;THE/DB ;PSI/DP .00297 (.0352)<.000105>

TABLE VI-5 CONTINUED
CH-53D TRANSFER FUNCTION FACTORS

CASE 185 40KT AFCS ON

DENOMINATOR: (0) (.0669) (.533) (.714) (1.49)[.631;.449]X.578;1.63]X.994;2.93]<.120>

CONTROL NUMERATORS:

PHI/DA .500 (0) (.0665) (.522) (.714) (1.95)[.502;.418]X.545;1.63]<.0115>
THE/DB -.172 (0) (-.0589) (.586) (1.07) (1.40) (2.04) (3.12)[.600;.887]<.0113>
PSI/DP -.341 (.0689) (.129) (.533) (.556) (.714) (1.49) (3.15)[.574;1.64]<-.00809>

PHI/DB -.0788 (0) (.326) (.598) (-.625) (1.07) (-1.41) (1.77)[.381;.872]<-.00570>
THE/DA .0768 (0) (-.0101) (-.302) (.627) (.714) (1.97)[.759;.367]<.277E-4>

PHI/DA ;THE/DB -.0865 (0) (-.0587) (.586) (1.07) (1.96)[.501;.417]<.00108>
PHI/DA ;PSI/DP -.177 (.0445) (.0671) (.532) (.556) (.714)[.545;1.63]<-.000296>
THE/DB ;PSI/DP .0587 (-.0601) (.131) (.556) (.586) (1.07) (1.37) (3.49)<-.000767>

PHI/DB ;PSI/DP .0248 (.0349) (.271) (-.538) (.556) (.604) (1.07) (-1.41)<.635E-4>
PHI/DP ;THE/DB -.0361 (0) (-.0607) (.556) (.586) (1.03) (1.07) (-1.33)<-.00104>
PHI/DC ;THE/DB -.00131 (0) (-.0708) (.608) (1.07) (4.65)[.602;.820]<.000189>

THE/DA ;PSI/DP -.0272 (.00645) (.311) (-.470) (.556) (.624) (.714)<.635E-5>
THE/DP ;PHI/DA -.00345 (0) (.00753) (.556) (.558) (.714)[.202;1.64]<-.155E-4>
THE/DC ;PHI/DA .0122 (0) (-.0215) (.714) (1.10) (1.90)[.502;.431]<-.728E-4>

PSI/DA ;THE/DB -.00489 (-.0586) (.556) (.590) (1.07) (1.72)[-.394;1.69]<.0004943>
PSI/DB ;PHI/DA .00728 (.0541) (.470) (.519) (1.07) (-1.78)[-.137;.679]<-.879E-4>
ID/DP ;PHI/DA .716 (0) (.565) (1.07) (1.95)[.501;.418]X.0231;2.01]<.590>

YD/DA ;THE/DB -.156 (-.0587) (.585) (1.07) (1.96)[.944;.411]X.0394;4.19]<.0333>
ZD/DB ;PHI/DA .905 (0) (-.147) (1.07) (1.97)[.505;.419]X.0752;2.05]<-.182>
XD/DC ;PHI/DA -.191 (0) (.714) (.885) (1.91)[.498;.429]X-.0446;1.84]<-.0766>

YD/DP ;THE/DB -.204 (-.0604) (.556) (.583) (1.04) (1.07) (-1.21)[.547;3.11]<-.0517>
ZD/DC ;PHI/DA -3.26 (0) (.0486) (.714) (1.94)[.499;.416]X.522;1.64]<-.102>

PHI/DA ;THE/DB ;PSI/DP .0306 (.0442) (-.0597) (.556) (.586) (1.07)<-.280E-4>
PHI/DC ;THE/DB ;PSI/DP .00183 (-.0432) (-.147) (.556) (.621) (1.07)<.335E-5>
THE/DC ;PHI/DA ;PSI/DP -.00421 (-.0265) (.0414) (.556) (.714) (1.09)<.201E-5>

PSI/DC ;PHI/DA ;THE/DB -.00232 (-.0435) (.113) (.556) (.870) (1.07)<.856E-5>
XD/DB ;PHI/DA ;PSI/DP -.252 (.0441) (.556) (.565) (1.07)[.0240;2.01]<-.0150>
YD/DA ;THE/DB ;PSI/DP .0591 (-.0595) (.556) (.585) (1.07)[.0260;4.07]<-.0202>

ZD/DC ;PHI/DA ;THE/DB .545 (0) (-.0557) (1.07) (1.95)[.498;.413]<-.0108>
ZD/DC ;PHI/DA ;PSI/DP 1.15 (.556) (.714)[.984;.0486]X.521;1.64]<.00290>
XD/DC ;PHI/DA ;THE/DB -.00810 (0) (1.07) (2.12)[.520;.435]<-.00348>

XD/DC ;PHI/DA ;PSI/DP .0362 (.0407) (.556) (.714) (.884)[-.0356;1.83]<.00173>
YD/DP ;PHI/DA ;THE/DB -.0697 (-.0599) (.556) (.577) (1.07) (-1.13) (1.17)<-.00199>
ZD/DB ;PHI/DA ;PSI/DP -.283 (.0439) (-.142) (.556) (1.07)[.0745;2.06]<.00847>

ZD/DC ;PHI/DA ;THE/DB ;PSI/DP -.193 (.0461) (-.0575) (.556) (1.07)<.000304>
YD/DC ;PHI/DA ;THE/DB ;PSI/DP .00297 (.0352) (.556) (1.07)<.620E-4>

TABLE VI-5 CONTINUED
CH-53D TRANSFER FUNCTION FACTORS
CASE 186 60KT AFCS OFF

DENOMINATOR: (0) (.121) (1.63)[-.240;.306]X .994;.688]X .198;1.03]<.00929>
S R P SP D

CONTROL NUMERATORS:

PHI/DA .494 (0) (.507) (.799)[-.246;.325]X .337;.969]<.0199>
THE/DB -.174 (0) (.0180) (.108) (.649) (1.82)[.194;1.03]<-.000328>
PSI/DP -.361 (.487) (.876) (1.64)[-.345;.330]X .0741;.467]<-.00602>

PHI/DB -.0832 (0) (.228) (-.264) (.909) (-1.59)[.196;.995]<-.00716>
PHI/DP .224 (0) (.447) (.829) (-1.35) (1.43)[-.305;.344]<-.0190>
PHI/DC .0445 (0) (.419) (.923)[-.451;.434]X .00948;1.18]<.00448>

THE/DA .0776 (0) (.0250) (-.129) (.649)[.407;.926]<-.000140>
THE/DP -.00588 (0) (.648) (1.48)[.503;.0301]X -.695;3.96]<-.803E-4>
THE/DC .0313 (0) (.00648) (.0744) (.663) (1.97)[.155;1.05]<.219E-4>

PSI/DA .0332 (.481)[-.228;.320]X .966;1.22]X -.331;1.67]<.00609>
PSI/DB .0171 (.239) (-.388) (1.90)[.326;.936]X -.397;.956]<-.00229>
PSI/DC .00768 (.442) (1.94) (3.01)[-.393;.391]X .182;.686]<.001A3>

YD/DB 1.30 (0) (.108) (.664) (1.87)[.194;1.03]X .0498;2.02]<.758>
YD/DA .870 (.535) (.750)[-.239;.327]X .306;.952]X .0193;4.27]<.617>
ZD/DC -7.70 (0) (1.69)[.803;.157]X .338;.526]X .212;1.01]<-.0913>

YD/DC -.220 (0) (.0709) (.677) (2.11)[.156;1.05]X .112;2.04]<-.103>
YD/DP 1.23 (.460) (.776) (-1.40) (1.43)[-.303;.345]X .250;2.41]<-.610>
ZD/DB 2.61 (0) (-.0188) (.110) (1.81)[.193;1.03]X .120;2.10]<-.0854>

PHI/DA ;THE/DB -.0863 (0) (.0151) (.650)[.332;.978]<-.000812>
PHI/DA ;PSI/DP -.185 (.0527) (.484) (.849)[-.281;.336]<-.000453>
THE/DB ;PSI/DP .0628 (.0130) (.645) (1.82)[-.0358;.448]<.000193>

PHI/DB ;PSI/DP .0262 (.0835) (.754) (-1.62)[-.343;.138]<-.508E-4>
PHI/DP ;THE/DB -.0394 (0) (.0130) (.644) (-1.35) (1.36)<.000610>
PHI/DC ;THE/DB -.00514 (0) (.0161) (.982)[.0822;1.32]<-.000141>

THE/DA ;PSI/DP -.0288 (.0372) (.449) (-.869) (.636)<.000183>
THE/DP ;PHI/DA -.00151 (0) (.0374) (.656)[.313;3.52]<-.000459>
THE/DC ;PHI/DA .0157 (0) (.0127) (.538)[.302;.989]<.000115>

PSI/DA ;THE/DB -.00514 (.0152) (.652) (1.86)[-.319;1.63]<-.000250>
PSI/DB ;PHI/DA .0110 (.0600) (.373) (-.643)[-.139;1.19]<-.000224>
PSI/DC ;THE/DB -.00187 (.0161) (1.74) (2.02)[.0643;.653]<-.451E-4>

PSI/DC ;PHI/DA .00245 (.0971) (.460) (5.99)[-.308;.443]<.000129>
YD/DB ;PHI/DA .644 (0) (.660)[.331;.980]X .0473;2.06]<1.73>
YD/DP ;PSI/DP -.466 (.662) (1.87)[-.0378;.448]X .0500;2.03]<-.477>

YD/DA ;THE/DB -.152 (.0152) (.650)[.299;.960]X .0215;4.28]<-.0253>
YD/DA ;PSI/DP -.351 (.485) (.827)[-.272;.339]X .0147;4.10]<-.273>
ZD/DC ;PHI/DA -3.82 (0) (.266)[.213;.867]X .353;.957]<-.202>

ZD/DC ;THE/DB 1.25 (0) (.0132) (.106) (1.82)[.195;1.02]<.00333>
ZD/DC ;PSI/DP 2.78 (.349) (1.70)[-.122;.342]X .203;.576]<.0619>
YD/DC ;PHI/DA -.111 (0) (.595)[.290;.995]X .0963;2.11]<-.290>

YD/DC ;THE/DB -.00236 (0) (.104) (1.83) (-4.70)[.171;1.06]<.00186>
YD/DC ;PSI/DP .0805 (.557) (2.11)[.00779;.392]X .127;2.02]<.0596>
YD/DP ;PHI/DA .413 (.407) (.986) (-1.50) (1.50)[-.316;.350]<-.0459>

YD/DP ;THE/DB -.218 (.0130) (.645) (1.34) (-1.42)[.261;2.39]<.0196>
ZD/DB ;PHI/DA 1.31 (0) (-.0160)[.336;.984]X .117;2.07]<-.0872>
ZD/DB ;PSI/DP -.942 (-.0146) (1.81)[-.0443;.446]X .115;2.10]<.0219>

PHI/DA ;THE/DB ;PSI/DP .0324 (.0121) (.0523) (.646)<.113E-4>
PHI/DC ;THE/DB ;PSI/DP .00228 (.0156) (-.0223) (.838)<-.665E-6>
THE/DC ;PHI/DA ;PSI/DP -.00549 (-.00235) (.0492) (.539)<.368E-6>

TABLE VI-5 CONTINUED
CH-53D TRANSFER FUNCTION FACTORS
CASE 186 60KT AFCS OFF

CONTROL NUMERATORS CONCLUDED:

PSI/DC ;PHI/DA ;THE/DB -.000777 (.0160) (.126) (2.53)<-.397E-5>

YD/DB ;PHI/DA ;PSI/DP -.240 (.0518) (.661)[.0483;2.06]<-.0349>
YD/DA ;THE/DB ;PSI/DP .0612 (.0128) (.645)[.0199;4.11]<.00855>
ZD/DC ;PHI/DA ;THE/DB .625 (0) (.0148)[.334;.972]<.00874>

ZD/DC ;THE/DB ;PSI/DP -.454 (.0121) (1.82)[-.0372;.453]<-.00205>
ZD/DC ;PHI/DA ;PSI/DP 1.43 (.0573) (.341)[.170;.416]<.00484>
XD/DC ;PHI/DA ;THE/DB -.00122 (0) (-2.62)[.299;.772]<.00190>

XD/DC ;PHI/DA ;PSI/DP .0418 (.0401) (.547)[.103;2.10]<.00404>
XD/DC ;THE/DB ;PSI/DP .000533 (1.45) (-9.87)[.0203;.481]<-.00176>
YD/DP ;PHI/DA ;THE/DB -.0720 (.0123) (.633) (-1.53) (1.57)<.00135>

ZD/DB ;PHI/DA ;PSI/DP -.491 (-.0142) (.0516)[.112;2.08]<.00155>

ZD/DC ;PHI/DA ;THE/DB ;PSI/DP -.235 (.0111) (.0543)<-.000141>
XD/DC ;PHI/DA ;THE/DB ;PSI/DP .000325 (.0908) (-4.98)<-.000147>

GUST NUMERATORS:

PHI/UG -.00253 (0) (0) (0) (.942) (-1.31)[.614;.747]<.00174>
THE/UG -.00222 (0) (0) (.126) (.651) (1.88)[.230;.919]<-.000289>
PSI/UG .00231 (0) (0) (1.69)[-.189;.524][.813;.722]<.000558>

PHI/VG .0168 (0) (0) (.392) (.478) (.808)[-.293;.336]<.000289>
THE/VG .000686 (0) (0) (.418) (.645) (6.08)[.452;.0164]<.303E-6>
PSI/VG -.00815 (0) (0) (1.73)[-.192;.301][.971;.657]<-.000553>

PHI/WG -.00131 (0) (0) (.669) (1.44) (-1.60)[-.209;.297]<.000179>
THE/WG -.000524 (0) (0) (.0349) (.835) (1.93)[.0479;.402]<-.453E-5>
PSI/WG .00252 (0) (.683) (1.64)[-.203;.302][.0653;.485]<.606E-4>

PHI/PG 1.57 (0) (.639) (.723)[-.181;.303][.343;.989]<.0599>
THE/PG -.178 (0) (.0131) (.652)[.806;.602][-.164;.926]<-.000473>
PSI/PG .111 (.593) (.948) (1.22)[-.203;.299][-.349;1.63]<.0182>

PHI/QG .932 (0) (.300) (.872)[-.660;.419][.336;.941]<.0378>
THE/QG .448 (0) (.0203) (.0919) (.648) (2.07)[.229;.999]<.00111>
PSI/QG -.112 (.303) (-.654) (1.98)[-.348;.450][.679;1.15]<.0118>

PHI/RG -.359 (0) (-.465) (.828) (-1.13) (1.38)[-.293;.339]<.0293>
THE/RG -.0743 (0) (.651) (1.42) (-1.71)[.491;.0162]<.306E-4>
PSI/RG .560 (.505) (.866) (1.64)[-.329;.328][.0663;.461]<.00929>

XD/UG .0297 (0) (.127) (.665) (1.88)[.232;.896][.101;1.57]<.00929>
ZD/UG .0891 (0) (0) (.127) (1.78)[.239;.831][.188;1.45]<.0292>
YD/VG .103 (0) (.385) (.501) (.761)[-.291;.337][.264;2.11]<.00929>

XD/WG -.00279 (0) (0) (.958) (-2.13)[.136;.438][.379;1.78]<.00347>
ZD/WG .654 (0) (.123) (.683) (1.64)[-.229;.305][.208;1.05]<.00929>

PHI/UG ;THE/DB .000254 (0) (0) (.561) (-1.17) (1.14)<-.000223>
PHI/UG ;PSI/DP .000395 (0) (.747) (-1.24)[-.820;.0231]<-.196E-6>
THE/UG ;PHI/DA -.00111 (0) (0) (.642)[.342;.931]<-.000619>

THE/UG ;PSI/DP .000815 (0) (.634) (1.82)[-.0297;.445]<.000187>
PSI/UG ;PHI/DA .00122 (0) (-.00344) (.166)[.729;.538]<-.199E-6>
PSI/UG ;THE/DB -.000363 (0) (.579) (1.82)[-.00814;.432]<-.711E-4>

PHI/VG ;THE/DB -.00286 (0) (0) (.0137) (.406) (.627)<-.9985-5>
PHI/VG ;PSI/DP -.00425 (0) (.448) (.836)[-.308;.343]<-.000147>
THE/VG ;PHI/DA .000443 (0) (0) (.0365) (.441) (.701)<.501E-5>

THE/VG ;PSI/DP -.000296 (0) (.653) (4.26)[.566;.0155]<-.196E-6>
PSI/VG ;PHI/DA -.00453 (0) (.508) (.788)[-.254;.323]<-.000190>
PSI/VG ;THE/DB .00140 (0) (.00510) (.00877) (.658) (1.81)<.748E-7>

TABLE VI-5 CONTINUED
CH-53D TRANSFER FUNCTION FACTORS
CASE 186 60KT AFCS OFF

GUST NUMERATORS CONTINUED:

PHI/WG ;THE/DB .000185 (0) (0) (.0184) (-1.61) (1.80)<-.982E-5>
PHI/WG ;PSI/DP -.911E-4 (0) (-.409) (1.41)[.0130;.390]<.796E-5>
THE/WG ;PHI/DA -.000267 (0) (0) (.0486)[.437;.736]<-.702E-5>

THE/WG ;PSI/DP .000204 (0) (.0491) (1.62)[.0601;.498]<.346E-5>
PSI/WG ;PHI/DA .00129 (0) (.175) (.590)[-.237;.308]<.126E-4>
PSI/WG ;THE/DB -.000429 (0) (.0182) (1.82)[.0597;.479]<-.326E-5>

PHI/PG ;THE/DB -.288 (0) (.0139) (.653)[.333;.976]<-.00248>
PHI/PG ;PSI/DP -.592 (.0599) (.524) (.873)[-.259;.328]<-.00160>
THE/PG ;PHI/DA -.0781 (0) (.00228) (.653)[.337;.978]<-.000111>

THE/PG ;PSI/DP .0649 (.0177) (.668) (.830)[-.451;.858]<.000464>
PSI/PG ;PHI/DA .00738 (.0725) (.363) (-.955)[-.312;1.16]<-.000249>
PSI/PG ;THE/DB -.0162 (.0139) (.658) (1.86)[-.332;1.66]<-.000760>

PHI/QG ;THE/DB -.125 (0) (.00914) (.612)[.378;.827]<-.000477>
PHI/QG ;PSI/DP -.311 (.0347) (.285) (.792)[-.511;.379]<-.000358>
THE/QG ;PHI/DA .227 (0) (.0213) (.655)[.336;.966]<.00298>

THE/QG ;PSI/DP -.162 (.0179) (.651) (2.06)[-.00772;.398]<-.000621>
PSI/QG ;PHI/DA -.0837 (.0780) (.332) (-.332)[.349;.861]<.000534>
PSI/QG ;THE/DB .0119 (.00897) (.549) (-.810)[.992;1.73]<-.0001427>

PHI/RG ;THE/DB .0620 (0) (.0137) (.664) (-1.34) (1.34)<-.00101>
PHI/RG ;PSI/DP .00407 (.822)[.435;.221][-.998;.469]<.359E-4>
THE/RG ;PHI/DA -.00477 (0) (.0360) (.633) (-2.11) (2.22)<.000507>

THE/RG ;PSI/DP .00515 (.0415) (.751) (1.91)[-.0193;.445]<.605E-4>
PSI/RG ;PHI/DA .288 (.0556) (.491) (.844)[-.274;.333]<.000735>
PSI/RG ;THE/DB -.0972 (.0137) (.660) (1.82)[-.0337;.448]<-.000321>

XD/UG ;PHI/DA .0148 (0) (.656)[.338;.911][.109;1.57]<.0199>
XD/UG ;THE/DB -.00228 (0) (.109) (.682) (1.88)[.215;1.01]<-.000328>
XD/UG ;PSI/DP -.0104 (.656) (1.83)[-.0358;.444][.3991;1.56]<-.00602>

ZD/UG ;PHI/DA .0448 (0) (0)[.307;.881][.246;1.14]<.0627>
ZD/UG ;THE/DB -.00969 (0) (0) (.116) (1.62)[.232;1.10]<-.00245>
ZD/UG ;PSI/DP -.0322 (0) (1.76)[-.0465;.440][.181;1.31]<-.0190>

YD/VG ;PHI/DA .0362 (0) (.868)[-.300;.341][.992;.448]<.000735>
YD/VG ;THE/DB -.0178 (0) (.0137) (.399) (.634)[.275;2.28]<-.000321>
YD/VG ;PSI/DP -.0271 (.461) (.789)[-.306;.344][.274;2.27]<-.00602>

XD/WG ;PHI/DA -.00133 (0) (0) (-2.02) (3.01)[.445;.760]<.00468>
XD/WG ;THE/DB .00116 (0) (0) (.106) (1.82)[.145;1.05]<.000245>
XD/WG ;PSI/DP .00133 (0) (1.59) (-1.82) (2.81)[.0620;.485]<-.00256>

ZD/WG ;PHI/DA .323 (0) (.624)[-.226;.320][.145;.983]<.0199>
ZD/WG ;THE/DB -.112 (0) (.0140) (.108) (1.82)[.200;1.03]<-.000328>
ZD/WG ;PSI/DP -.236 (.683) (1.64)[-.301;.324][.0696;.465]<-.00602>

XD/UG ; ZD/DC -.209 (0) (.129) (1.86)[.236;.867][.105;1.56]<-.0913>
YD/VG ; ZD/DC -.791 (0) (.312) (.179)[.121;.421][.265;2.34]<-.0913>

PHI/UG ;THE/DB ;PSI/DP -.954E-5 (0) (.148) (1.12)<-.157E-5>
THE/UG ;PHI/DA ;PSI/DP .000421 (0) (.0527) (.634)<.141E-4>
PSI/UG ;PHI/DA ;THE/DB -.000188 (0) (.0623) (.593)<-.695E-5>

PHI/VG ;THE/DB ;PSI/DP .000718 (0) (.0130) (.643)<.601E-5>
THE/VG ;PHI/DA ;PSI/DP -.000180 (0) (.0374) (.665)<-.448E-5>
PSI/VG ;PHI/DA ;THE/DB .000782 (0) (.0152) (.655)<.778E-5>

PHI/WG ;THE/DB ;PSI/DP .306E-4 (0) (.0139) (-.666)<-.284E-6>
THE/WG ;PHI/DA ;PSI/DP .000104 (0) (.0387) (.112)<.450E-6>
PSI/WG ;PHI/DA ;THE/DB -.000219 (0) (.0164) (.165)<-.593E-6>

TABLE VI-5 CONTINUED
CH-53D TRANSFER FUNCTION FACTORS

CASE 186 60KT AFCS OFF

GUST NUMERATORS CONCLUDED:

```
 PHI/PG ;THE/DB ;PSI/DP    .108 (.0127) (.0535) (.647)<.473E-4>
 THE/PG ;PHI/DA ;PSI/DP    .0293 (-.00323) (.0520) (.651)<-.321E-5>
 PSI/PG ;PHI/DA ;THE/DB    .000452 (.0378)[ .617;.723 ]<.891E-5>

 PHI/QG ;THE/DB ;PSI/DP    .0424 (.0147) (.0415) (.635)<.164E-4>
 THE/QG ;PHI/DA ;PSI/DP   -.0854 (.0190) (.0518) (.654)<-.550E-4>
 PSI/QG ;PHI/DA ;THE/DB    .00958 (.777)[ .671;.0393 ]<.115E-4>

 PHI/RG ;THE/DB ;PSI/DP   -.000334 (.0161)[ .419;.555 ]<-.166E-5>
 THE/RG ;PHI/DA ;PSI/DP    .00267 (.0395) (.0663) (.773)<.543E-5>
 PSI/RG ;PHI/DA ;THE/DB   -.0502 (.0133) (.0554) (.659)<-.243E-4>

  XD/UG ;PHI/DA ;THE/DB   -.00113 (0) (.670)[ .313;1.03 ]<-.000812>
  XD/UG ;PHI/DA ;PSI/DP   -.00537 (.0529) (.655)[ .102;1.56 ]<-.000453>
  XD/UG ;THE/DB ;PSI/DP    .000764 (.684) (1.83)[ -.0369;.450 ]<.0001937>

  ZD/UG ;PHI/DA ;THE/DB   -.00887 (0) (0)[ .375;1.04 ]<-.00527>
  ZD/UG ;PHI/DA ;PSI/DP   -.0166 (0) (.0531)[ .182;1.27 ]<-.00143>
  ZD/UG ;THE/DB ;PSI/DP    .00348 (0) (1.82)[ -.0404;.451 ]<.00129>

  YD/VG ;PHI/DA ;THE/DB   -.00636 (0) (.0133)[ .993;.535 ]<-.243E-4>
  YD/VG ;PHI/DA ;PSI/DP   -.00979 (.405) (.938)[ -.320;.349 ]<-.000453>
  YD/VG ;THE/DB ;PSI/DP    .00472 (.0130) (.645)[ .284;2.21 ]<.0001937>

  XD/WG ;PHI/DA ;THE/DB    .000580 (0) (0)[ .418;.849 ]<.000418>
  XD/WG ;PHI/DA ;PSI/DP    .000685 (0) (.106) (-1.88) (2.61)<-.000356>
  XD/WG ;THE/DB ;PSI/DP   -.000495 (0) (1.90)[ -.0179;.452 ]<-.0001927>

  ZD/WG ;PHI/DA ;THE/DB   -.0558 (0) (.0151)[ .339;.981 ]<-.000812>
  ZD/WG ;PHI/DA ;PSI/DP   -.121 (.0530) (.646)[ -.237;.331 ]<-.000453>
  ZD/WG ;THE/DB ;PSI/DP    .0405 (.0130) (1.82)[ -.0371;.449 ]<.0001937>

  XD/UG ; ZD/DC ;PHI/DA   -.104 (0)[ .334;.895 ][ .114;1.56 ]<-.202>
  XD/UG ; ZD/DC ;THE/DB    .0166 (0) (.106) (1.86)[ .219;1.01 ]<.00333>
  XD/UG ; ZD/DC ;PSI/DP    .0732 (1.81)[ -.0400;.451 ][ .102;1.54 ]<.06399>

  YD/VG ; ZD/DC ;PHI/DA   -.279 (0) (.307) (.487)[ .132;.415 ]<-.007187>
  YD/VG ; ZD/DC ;THE/DB    .129 (0) (.0128) (.379)[ .276;2.30 ]<.003247>
  YD/VG ; ZD/DC ;PSI/DP    .209 (.355)[ .0514;.405 ][ .271;2.29 ]<.06197>

  XD/UG ;PHI/DA ;THE/DB ;PSI/DP    .000394 (.0497) (.680)<.133E-4>
  ZD/UG ;PHI/DA ;THE/DB ;PSI/DP    .00180 (0) (.0502)<.901E-4>
  YD/VG ;PHI/DA ;THE/DB ;PSI/DP    .00173 (.0123) (.623)<.133E-4>

  XD/WG ;PHI/DA ;THE/DB ;PSI/DP   -.000255 (0) (.0949)<-.242E-4>
  ZD/WG ;PHI/DA ;THE/DB ;PSI/DP    .0209 (.0121) (.0525)<.133E-4>
  XD/UG ; ZD/DC ;PHI/DA ;THE/DB    .00827 (0)[ .310;1.03 ]<.008743>

  YD/VG ; ZD/DC ;PHI/DA ;THE/DB    .0458 (0) (.0123) (.429)<.000242>
  YD/VG ; ZD/DC ;PHI/DA ;PSI/DP    .0752 (.419)[ .0729;.392 ]<.004843>
  AD/WG ; ZD/DC ;PHI/DA ;THE/DB   -.00342 (0)[ .479;.746 ]<-.001907>

  XD/UG ; ZD/DC ;PHI/DA ;THE/DB ;PSI/DP   -.00287 (.0492)<-.000141>
  YD/VG ; ZD/DC ;PHI/DA ;THE/DB ;PSI/DP   -.0125 (.0113)<-.000141>
  XD/WG ; ZD/DC ;PHI/DA ;THE/DB ;PSI/DP    .00163 (.0901)<.000147>
```

TABLE VI-5 CONTINUED
CH-53D TRANSFER FUNCTION FACTORS

CASE 186 60KT AFCS ON

DENOMINATOR: (0) (.0359) (.668) (.714) (3.44)[.604;.574][.988;1.55][.623;1.60]<.132>
S SD A HD A RA SP

CONTROL NUMERATORS:

PHI/DA .494 (0) (.0398) (.667) (.718) (1.98)[.552;.525][.590;1.60]<.0129>
THE/DB -.174 (0) (.0151) (.646) (1.07) (3.78)[.599;.570][.395;1.89]<-.00498>
PSI/DP -.361 (.0401) (.132) (.556) (.668) (.714) (1.51) (3.12)[.618;1.61]<-.00616>

PHI/DB -.0832 (0) (.214) (-.255) (.700) (1.07) (-1.60) (1.74)[.811;.671]<-.00428>
PHI/DP .224 (0) (.0401) (.556) (.668) (.714) (1.30) (-1.87)[.588;1.58]<-.0111>
PHI/DC .0886 (0) (.0398) (.714) (.715) (1.79)[.502;.798][.197;1.45]<.00266>

THE/DA .0787 (0) (.0246) (-.151) (.629) (.718) (1.87)[.848;.884]<-.577E-4>
THE/DP -.00588 (0) (.0381) (.556) (.668) (.714)[.992;1.12][-.885;8.98]<-.001B2>
THE/DC .0313 (0) (.0125) (.536) (.714) (1.40) (1.53) (4.03)[.568;.595]<.0004S5>

PSI/DA .0302 (.0398) (.555) (.680) (.714) (5.61)[.0160;.985][.634;1.66]<.00395>
PSI/DB .0171 (.117) (-.536) (1.07)[1.00;.517][.0500;1.28][.898;2.36]<-.00267>
PSI/DC .00768 (.0474) (.311) (.556) (.714) (6.15)[.639;1.26][.825;1.91]<.00159>

XD/DB 1.30 (0) (.661) (1.07) (1.87)[.602;.574][.000;1.47][.0415;2.05]<10.5>
YD/DA .870 (.0398) (.664) (.714) (1.92)[.510;.512][.589;1.60][-.0196;4.31]<.800>
ZD/DC -7.70 (0) (.0381) (.714) (3.51)[.603;.573][.990;1.52][.578;1.65]<-1.17>

XD/DC -.220 (0) (.620) (.714) (1.22) (1.64) (4.23)[.600;.585][.0595;2.18]<-1.30>
YD/DP 1.23 (.0401) (.556) (.668) (.714) (1.31) (-1.50)[.590;1.55][.528;1.17]<-.624>
ZD/DB 2.61 (0) (-.0162) (1.07) (3.80)[.607;.573][.995;1.49][.122;2.08]<-.536>

PHI/DA ;THE/DB -.0863 (0) (.0151) (.685) (1.07) (1.96)[.547;.522]<-.000482>
PHI/DA ;PSI/DP -.185 (.0403) (.0516) (.556) (.666) (.714)[.587;1.60]<-.000261>
THE/DB ;PSI/DP .0628 (.0127) (.132) (.556) (.687) (1.07) (1.38) (3.47)<.000193>

PHI/DP ;PSI/DP .0262 (.0835) (.556) (.7[illegible]) (1.07) (-1.62)[-.343;.138]<-.301E-4>
PHI/DP ;THE/DB -.0994 (0) (.0130) (.556) (.688) (1.07) (1.26) (-1.87)<.000368>
PHI/DC ;THE/DB -.00514 (0) (.0161) (.738) (1.07) (1.87)[.452;.838]<-.845E-4>

THE/DA ;PSI/DP -.0288 (.0372) (.849) (-.869) (.556) (.636) (.714)<.569E-4>
THE/DP ;PHI/DA -.00151 (0) (.0378) (.556) (.69[illegible]) (.714)[.313;3.52]<-.000182>
THE/DC ;PHI/DA .0157 (0) (.0127) (.581) (.718) (1.97)[.506;.548]<.858E-4>

PSI/DA ;THE/DB -.00514 (.0152) (.556) (.650) (1.07) (6.82)[.0186;.876]<-.000148>
PSI/DB ;PHI/DA .0110 (.0600) (.385) (.585) (-.604) (1.07)[-.0887;1.22]<-.000133>
PSI/DC ;THE/DP -.00187 (.0160) (.298) (.556) (1.07) (8.65)[.897;1.83]<-.501E-4>

PSI/DC ;PHI/DA .00245 (.0881) (.182) (.556) (.714) (7.03)[.558;1.32]<.755E-4>
XD/DB ;PHI/DA .686 (0) (.662) (1.07) (1.98)[.551;.528][.0475;2.06]<1.03>
XD/DB ;PSI/DP -.866 (.132) (.556) (.661) (1.07) (1.35) (1.56)[.0423;2.05]<-.888>

YD/DA ;THE/DB -.152 (.0152) (.648) (1.07) (1.98)[.508;.509][-.0158;8.35]<-.0150>
YD/DA ;PSI/DP -.351 (.0401) (.556) (.662) (.714)[.583;1.60][.0139;8.11]<-.161>
ZD/DC ;PHI/DA -3.82 (0) (.0140) (.714) (1.95)[.548;.528][.552;1.64]<-.134>

ZD/DC ;THE/DB 1.25 (0) (.0188) (1.07) (3.78)[.602;.565][.995;1.49]<.0530>
ZD/DC ;PSI/DP 2.78 (.0387) (.131) (.556) (.714) (1.85) (3.22)[.572;1.66]<.0655>
XD/DC ;PHI/DA -.111 (0) (.633) (.714) (1.94)[.533;.529][.0565;2.16]<-.127>

XD/DC ;THE/DB -.00235 (0) (1.07) (1.01) (-8.16)[.635;.406][.981;1.54]<.0123>
XD/DC ;PSI/DP .0805 (.111) (.556) (.618) (.714) (1.25) (8.06)[.0669;2.11]<.0593>
YD/DP ;PHI/DA .813 (.0401) (.556) (.682) (.714) (-1.52) (1.52)[.592;1.60]<-.0264>

YD/DP ;THE/DB -.214 (.0127) (.556) (.681) (1.07) (1.27) (-1.51)[.588;3.14]<.0195>
ZD/DB ;PHI/DA 1.31 (0) (-.0160) (1.07) (1.97)[.558;.523][.114;2.07]<-.0517>
ZD/DB ;PSI/DP -.942 (-.0140) (.133) (.556) (1.07) (1.38) (3.47)[.119;2.08]<.0221>

PHI/DA ;THE/DB ;PSI/DP .0328 (.0121) (.0523) (.556) (.686) (1.07)<.789E-5>
PHI/DC ;THE/DB ;PSI/DP .00228 (.0156) (-.0223) (.556) (.838) (1.07)<-.198E-6>
THE/DC ;PHI/DA ;PSI/DP -.00589 (-.00235) (.0492) (.539) (.556) (.714)<.186E-6>

TABLE VI-5 CONTINUED
CH-53D TRANSFER FUNCTION FACTORS

CASE 186 60KT AFCS ON

CONTROL NUMERATORS CONCLUDED:

PSI/DC ;PHI/DA ;THE/DB -.000777 (.0160) (.126) (.556) (1.07) (2.53) <-.235E-5>

ID/DB ;PHI/DA ;PSI/DP -.240 (.0518) (.556) (.661) (1.07)[.0883;2.06]<-.0207>
YD/DA ;THE/DB ;PSI/DP .0612 (.0128) (.556) (.645) (1.07)[.0199;4.11]<.00507>
ZD/DC ;PHI/DA ;THE/DB .625 (0) (.0148) (1.07) (1.96)[.508;.517]<.00519>

ZD/DC ;THE/DB ;PSI/DP -.458 (.0117) (.136) (.556) (1.07) (1.38) (3.47) <-.00205>
ZD/DC ;PHI/DA ;PSI/DP 1.43 (.0352) (.0515) (.556) (.718)[.549;1.65]<.00278>
YD/DC ;PHI/DA ;THE/DB -.00122 (0) (1.07) (2.03) (-3.05)[.477;.375]<.00113>

YD/DC ;PHI/DA ;PSI/DP .0418 (.0508) (.556) (.636) (.718)[.0618;2.16]<.00250>
YD/DC ;THE/DB ;PSI/DP .000533 (.216) (.556) (1.07) (-8.32)[.989;1.83]<-.00191>
YD/DP ;PHI/DA ;THE/DB -.0720 (.0121) (.556) (.633) (1.07) (-1.53) (1.57) <.000799>

ZD/DB ;PHI/DA ;PSI/DP -.491 (-.0142) (.0516) (.556) (1.07)[.112;2.08]<.000920>

ZD/DC ;PHI/DA ;THE/DB ;PSI/DP -.285 (.0111) (.0583) (.556) (1.07) <-.816E-4>
YD/DC ;PHI/DA ;THE/DB ;PSI/DP .000325 (.0908) (.556) (1.07) (-8.99) <-.872E-4>

GUST NUMERATORS:

PHI/DG -.00253 (0) (0) (.386) (.699) (.714) (-1.28) (1.55)[.427;1.19]<.00137>
THE/DG -.00222 (0) (0) (.633) (.714) (8.09)[.577;.542][.992;1.85]<-.00258>
PSI/DG .00231 (0) (.127) (.714) (1.82) (2.79)[.000;.569][.566;1.58]<.000856>

PHI/YG .0168 (0) (0) (.0401) (.112) (.668) (.714) (1.66)[.568;1.57]<.000188>
THE/YG .00704 (0) (0) (.0371) (.115) (.691) (.714) (.866) (1.60) <.205E-4>
PSI/YG -.00815 (0) (.0399) (.556) (.672) (.714)[.606;1.61][.994;2.33]<-.00122>

PHI/ZG -.00131 (0) (0) (.0407) (.714) (.799) (1.18) (-1.91)[.532;1.39]<.000133>
THE/ZG -.000528 (0) (0) (.0475) (.714) (8.80)[.557;.820][.975;1.80]<-.293E-4>
PSI/ZG .00252 (0) (.0403) (.272) (.557) (.714) (1.48) (1.13)[.607;1.60]<.000129>

PHI/PG 1.57 (0) (.0361) (.666) (.714) (1.97)[.560;.529][.628;1.62]<.0389>
THE/PG -.174 (0) (.00306) (.646) (.714) (2.02)[.661;.601][.698;1.85]<-.000629>
PSI/PG .111 (.0387) (.554) (.699) (.714) (5.17)[.0236;.870][.630;1.59]<.0103>

PHI/QG .932 (0) (.0581) (.673) (.714) (1.81)[.889;.831][.801;1.83]<.0180>
THE/QG .449 (0) (.0213) (.656) (.714) (1.27) (1.61) (8.25)[.589;.556]<.0120>
PSI/QG -.112 (.0562) (-.233) (.562) (.631) (.714)[.410;1.71][.820;2.53]<.00695>

PHI/RG -.359 (0) (.0401) (.572) (.657) (.714) (1.32) (-1.44)[.579;1.56]<.0179>
THE/RG -.120 (0) (.0369) (.626) (.714) (.737) (-1.46)[.988;1.17]<.00199>
PSI/RG .560 (.0401) (.136) (.556) (.678) (.714) (1.52) (3.11)[.617;1.60]<.0100>

ID/UG .0297 (0) (.659) (.714) (8.02)[.593;.570][.995;1.42][.280;1.89]<.132>
ZD/UG .0831 (0) (0) (.714) (1.82)[.616;.570][.990;1.48][.190;1.85]<.589>
YD/UG .103 (0) (.0401) (.125) (.666) (.714) (1.66)[.578;1.53][.564;1.10]<.000920>

ID/WG -.00279 (0) (0) (.249) (.714)[.426;.621][.977;1.22][.781;8.97]<-.00701>
ZD/WG .654 (0) (.0399) (.714) (1.49)[.605;.573][.986;1.51][.614;1.63]<.132>

PHI/UG ;THE/DP .000258 (0) (0) (.861) (.696) (1.07) (-1.20) (1.27) <-.000133>
PHI/UG ;PSI/DP .000135 (0) (.108) (.556) (.714) (.782)[-.721;.889]<.951E-5>
THE/UG ;PHI/DA -.00111 (0) (0) (.631) (.714) (2.00)[.536;.494]<-.000286>

THE/UG ;PSI/DP .000815 (0) (.112) (.556) (.638) (.714) (1.38) (3.49) <.000110>
PSI/UG ;PHI/DA .00122 (0) (.0610) (.714)[.999;.555][.506;1.61]<.424E-4>
PSI/UG ;THE/DP -.000363 (0) (.134) (.556) (.605) (1.07) (1.38) (1.45) <-.811E-4>

PHI/VG ;THE/DB -.00286 (0) (0) (.0133) (.112) (.667) (1.07) (1.68) <-.898E-5>
PHI/VG ;PSI/DP -.00825 (0) (.0401) (.556) (.666) (.714)[.560;1.57]<-.000111>
THE/VG ;PHI/DA .000883 (0) (0) (.0361) (.114) (.668) (.714) (2.35) <.205E-5>

THE/VG ;PSI/DP -.000296 (0) (.0381) (.556) (.709) (.714) (.780) (7.17) <-.177E-4>
PSI/VG ;PHI/DA -.00451 (0) (.0398) (.556) (.666) (.714)[.578;1.60]<-.000123>
PSI/VG ;THE/DB .00180 (0) (.0152) (.556) (.652) (1.07) (1.92) (2.89) <.458E-4>

TABLE VI-5 CONTINUED

CH-53D TRANSFER FUNCTION FACTORS

CASE 186 60KT AFCS ON

GUST NUMERATORS CONTINUED:

```
  PHI/WG ;THE/DB    .000185 (0) (0) (.0183) (1.07) (-1.94)[ .974;.919 ]<-.5918-5>
  PHI/WG ;PSI/DP   -.9118-4 (0) (.0001) (.556) (-.615) (.714)[ .930;2.34 ]<.4908-5>
  THE/WG ;PHI/DA   -.000267 (0) (0) (.0487) (.714) (2.15)[ .564;.378 ]<-.2798-5>

  THE/WG ;PSI/DP    .000204 (0) (.0419) (.793) (.556) (.714) (1.58) (3.06) <.3148-5>
  PSI/WG ;PHI/DA    .00129 (0) (.0400) (.167) (.557) (.714)[ .569;1.61 ]<.8638-5>
  PSI/WG ;THE/DB   -.000429 (0) (.0170) (.276) (.556) (1.07) (1.28) (3.54) <-.5828-5>

  PHI/PG ;THE/DB   -.288 (0) (.0139) (.646) (1.07) (1.96)[ .588;.521 ]<-.00187>
  PHI/PG ;PSI/DP   -.592 (.556) (.661) (.714)[ .000;.0471 ][ .620;1.63 ]<-.000928>
  THE/PG ;PHI/DA   -.0781 (0) (.00228) (.650) (.714) (1.96)[ .586;.522 ]<-.4828-4>

  THE/PG ;PSI/DP    .0649 (.0131) (.188) (.556) (.648) (.714)[ .658;2.04 ]<.000171>
  PSI/PG ;PHI/DA    .00738 (.0551) (.887) (.531) (.714) (-1.98)[ .0252;1.02 ]<-.000153>
  PSI/PG ;THE/DB   -.0162 (.0128) (.556) (.646) (1.07) (6.53)[ -.00827;.875 ]<-.000398>

  PHI/QG ;THE/DB   -.125 (0) (.00910) (.638) (1.07) (1.87)[ .525;.442 ]<-.000281>
  PHI/QG ;PSI/DP   -.111 (.0274) (.0530) (.556) (.679) (.714)[ .388;1.40 ]<-.000239>
  THE/QG ;PHI/DA    .227 (0) (.0213) (.654) (.714) (1.97)[ .586;.513 ]<.00118>

  THE/QG ;PSI/DP   -.162 (.0183) (.122) (.556) (.656) (.718) (1.28) (1.95) <-.000863>
  PSI/QG ;PHI/DA   -.0817 (.0528) (-.0519) (.718)[ .999;.566 ][ .353;1.61 ]<.0001813>
  PSI/QG ;THE/DB    .0119 (.00232) (-.160) (.556) (.680) (1.07)[ .729;3.07 ]<-.1678-8>

  PHI/RG ;THE/DB    .0620 (0) (.0137) (1.07) (1.27) (-1.98)[ .999;.602 ]<-.000603>
  PHI/RG ;PSI/DP    .00407 (.0402) (.556) (.718)[ .810;.628 ][ -.156;.976 ]<.2488-8>
  THE/RG ;PHI/DA   -.00877 (0) (.0360) (.437) (.713) (.718) (-1.47) (3.59) <.0002017>

  THE/RG ;PSI/DP    .00515 (.0410) (.165) (.556) (.718) (.798) (1.30) (3.61) <.8528-8>
  PSI/RG ;PHI/DA    .288 (.0803) (.0551) (.556) (.677) (.718)[ .585;1.60 ]<.000880>
  PSI/RG ;THE/DB   -.0972 (.0135) (.116) (.556) (.657) (1.07) (1.38) (3.46) <-.0001133>

  ZD/UG ;PHI/DA     .0189 (0) (.660) (.714) (1.93)[ .555;.517 ][ .282;1.89 ]<.0129>
  ZD/UG ;THE/DB    -.00228 (0) (.683) (1.07) (1.97)[ .605;.688 ][ .989;1.38 ]<-.000498>
  ZD/UG ;PSI/DP    -.0104 (.132) (.556) (.659) (.718) (1.37) (3.47)[ .242;1.89 ]<-.000616>

  ZD/UG ;PHI/DA     .0448 (0) (0) (.714) (2.00)[ .569;.520 ][ .378;1.82 ]<.0571>
  ZD/UG ;THE/DB    -.00969 (0) (0) (1.07) (3.80)[ .683;.601 ][ .996;1.50 ]<-.0322>
  ZD/UG ;PSI/DP    -.0322 (0) (.132) (.556) (.718) (1.41) (3.33)[ .387;1.82 ]<-.0265>

  ZD/WG ;PHI/DA     .0362 (0) (.0401) (.188) (.671) (.714) (1.77)[ .591;1.59 ]<.000850>
  ZD/WG ;THE/DB    -.0178 (0) (.0913) (.125) (.619) (1.07) (1.65)[ .598;3.01 ]<-.0001801>
  ZD/WG ;PSI/DP    -.0271 (.0401) (.556) (.664) (.714)[ .571;1.52 ][ .575;3.05 ]<-.000616>

  ZD/WG ;PHI/DA    -.00133 (0) (0) (.376) (.714) (1.88) (5.10)[ .308;.853 ]<-.000700>
  ZD/WG ;THE/DP     .00116 (0) (0) (1.07) (1.30) (2.44) (3.25)[ .660;.850 ]<.002599>
  ZD/WG ;PSI/DP     .00133 (0) (.0872) (.252) (.556) (.714) (1.74) (2.69) (8.13) <.0002255>

  ZD/WG ;PHI/DA     .121 (0) (.0398) (.714) (1.96)[ .553;.523 ][ .582;1.62 ]<.0129>
  ZD/WG ;THE/DB    -.112 (0) (.0151) (1.07) (1.78)[ .606;.570 ][ .995;1.89 ]<-.000498>
  ZD/WG ;PSI/DP    -.236 (.0401) (.132) (.556) (.714) (1.51) (3.12)[ .610;1.62 ]<-.000616>

  ZD/UG ; ZD/DC    -.209 (0) (.714) (8.00)[ .588;.565 ][ .992;1.82 ][ .250;1.88 ]<-1.37>
  ZD/WG ; ZD/DC    -.791 (0) (.0335) (.120) (.714) (9.66)[ .548;1.58 ][ .562;3.10 ]<-.0906>

  PHI/WG ;THE/DB ;PSI/DP   -.9548-8 (0) (.188) (.556) (1.07) (1.12) <-.9128-6>
  THE/WG ;PHI/DA ;PSI/DP    .000421 (0) (.0527) (.556) (.638) (.714) <.5588-5>
  PSI/WG ;PHI/DA ;THE/DB   -.000188 (0) (.0623) (.556) (.593) (1.07) <-.8128-5>

  PHI/WG ;THE/DB ;PSI/DP    .000718 (0) (.0110) (.556) (.643) (1.07) <.3568-5>
  THE/WG ;PHI/DA ;PSI/DP   -.000180 (0) (.0374) (.556) (.665) (.714) <-.1788-5>
  PSI/WG ;PHI/DA ;THE/DB    .000782 (0) (.0152) (.556) (.655) (1.07) <.4618-5>

  PHI/WG ;THE/DB ;PSI/DP    .3068-8 (0) (.0139) (.556) (-.666) (1.07) <-.1698-6>
  THE/WG ;PHI/DA ;PSI/DP    .000104 (0) (.0387) (.112) (.556) (.714) <.1798-6>
  PSI/WG ;PHI/DA ;THE/DB   -.000219 (0) (.0164) (.165) (.556) (1.07) <-.3518-6>
```

TABLE VI-5 CONTINUED
CH-53D TRANSFER FUNCTION FACTORS

CASE 186 60KT AFCS ON

GUST NUMERATORS CONCLUDED:

PHI/PG ;THE/DB ;PSI/DP .109 (.0127) (.0535) (.556) (.697) (1.07) <-.281E-8>
THE/PG ;PHI/DA ;PSI/DP .0293 (-.00323) (.0520) (.556) (.651) (.714) <-.127E-5>
PSI/PG ;PHI/DA ;THE/DB .000852 (.0378) (.556) (1.07)[.617;.723]<.528E-5>

PHI/QG ;THE/DB ;PSI/DP .0428 (.0187) (.0415) (.556) (.635) (1.07) <.975E-5>
THE/QG ;PHI/DA ;PSI/DP -.0854 (.0190) (.0518) (.556) (.654) (.714) <-.218E-8>
PSI/QG ;PHI/DA ;THE/DB .00958 (.556) (.777) (1.07)[.671;.0191]<.682E-5>

PHI/RG ;THE/DB ;PSI/DP -.000334 (.0161) (.556) (1.07)[.819;.555]<-.985E-6>
THE/RG ;PHI/DA ;PSI/DP .00767 (.0195) (.0663) (.556) (.714) (.773) <.218E-5>
PSI/RG ;PHI/DA ;THE/DB -.0502 (.0133) (.0554) (.556) (.659) (1.07) <-.184E-8>

XD/UG ;PHI/DA ;THE/DB -.00111 (0) (.684) (1.07) (1.76)[.570;.576]<-.000482>
XD/UG ;PHI/DA ;PSI/DP -.00537 (.0519) (.556) (.660) (.714)[.243;1.89]<-.000261>
XD/UG ;THE/DB ;PSI/DP .000764 (.131) (.556) (.677) (1.07) (1.37) (3.48) <.000191>

ZD/UG ;PHI/DA ;THE/DB -.00487 (0) (0) (1.07) (1.99)[.588;.550]<-.00112>
ZD/UG ;PHI/DA ;PSI/DP -.0166 (0) (.0516) (.556) (.714)[.378;1.81]<-.00112>
ZD/UG ;THE/DB ;PSI/DP .00168 (0) (.131) (.556) (1.07) (1.38) (3.47) <.00129>

YD/VG ;PHI/DA ;THE/DB -.00636 (0) (.0137) (.193) (.625) (1.07) (1.81) <-.147E-8>
YD/VG ;PHI/DA ;PSI/DP -.00979 (.0491) (.556) (.668) (.714)[.592;1.58]<-.000261>
YD/VG ;THE/DB ;PSI/DP .00432 (.0137) (.556) (.638) (1.07)[.607;2.91]<.000193>

XD/WG ;PHI/DA ;THE/DB .000581 (0) (0) (1.07) (2.14)[.567;.418]<.000248>
XD/WG ;PHI/DA ;PSI/DP .000685 (0) (.0209) (.314) (.556) (.714) (3.57) <.638E-5>
XD/WG ;THE/DB ;PSI/DP -.000495 (0) (.187) (.556) (1.07) (1.30) (1.58) <-.000256>

ZD/WG ;PHI/DA ;THE/DB -.0558 (0) (.0151) (1.07) (1.96)[.553;.522]<-.000482>
ZD/WG ;PHI/DA ;PSI/DP -.121 (.0404) (.0516) (.556) (.714)[.580;1.62]<-.000261>
ZD/WG ;THE/DB ;PSI/DP .0405 (.0127) (.132) (.556) (1.07) (1.38) (3.47) <.000193>

YD/UG ; ZD/DC ;PHI/DA -.104 (0) (.714) (1.93)[.552;.511][.251;1.88]<-.138>
XD/UG ; ZD/DC ;THE/DB .0166 (0) (1.07) (1.95)[.595;.640][.987;1.36]<.0530>
XD/UG ; ZD/DC ;PSI/DP .0737 (.138) (.556) (.714) (1.39) (1.43)[.252;1.88]<.0655>

YD/VG ; ZD/DC ;PHI/DA -.279 (0) (.0316) (.137) (.714) (1.79)[.549;1.68]<-.00448>
YD/VG ; ZD/DC ;THE/DB .129 (0) (.0123) (.118) (1.07) (1.69)[.590;3.02]<.00300>
YD/VG ; ZD/DC ;PSI/DP .209 (.0186) (.556) (.714)[.588;1.57][.571;3.08]<.0655>

XD/UG ;PHI/DA ;THE/DB ;PSI/DP .000394 (.0497) (.556) (.680) (1.07) <.789E-5>
ZD/UG ;PHI/DA ;THE/DB ;PSI/DP .00990 (0) (.0602) (.556) (1.07) <.516E-8>
YD/VG ;PHI/DA ;THE/DB ;PSI/DP .00177 (.0123) (.556) (.623) (1.07) <.789E-5>

XD/WG ;PHI/DA ;THE/DB ;PSI/DP -.000255 (0) (.0949) (.556) (1.07) <-.183E-8>
ZD/WG ;PHI/DA ;THE/DB ;PSI/DP .0209 (.0121) (.0525) (.556) (1.07) <.789E-5>
XD/UG ; ZD/DC ;PHI/DA ;THE/DB .00427 (0) (1.07) (1.77)[.563;.576]<.005193>

YD/VG ; ZD/DC ;PHI/DA ;THE/DB .0058 (0) (.0123) (.138) (1.07) (1.81) <.000147>
YD/VG ; ZD/DC ;PHI/DA ;PSI/DP .0752 (.0387) (.556) (.714)[.552;1.64]<.002783>
XD/WG ; ZD/DC ;PHI/DA ;THE/DB -.00142 (0) (1.07) (2.57)[.557;.387]<-.001133>

XD/UG ; ZD/DC ;PHI/DA ;THE/DB ;PSI/DP -.00287 (.0492) (.556) (1.07) <-.836E-8>
YD/VG ; ZD/DC ;PHI/DA ;THE/DB ;PSI/DP -.0125 (.0113) (.556) (1.07) <-.836E-8>
XD/WG ; ZD/DC ;PHI/DA ;THE/DB ;PSI/DP .00163 (.0901) (.556) (1.07) <.872E-8>

MICROFILMED FROM
BEST AVAILABLE COPY

TABLE VI-5 CONTINUED

CH-53D TRANSFER FUNCTION FACTORS

CASE 187 80KT AFCS OFF

DENOMINATOR: (0) (.138) (.471) (1.14) (1.61)[-.325;.310][.206;1.12]<.0146>

CONTROL NUMERATORS:

```
 PHI/DA    .490  (0) (.387) (1.13)[-.335;.330][.340;1.10]<.0286>
 THE/DB   -.179  (0) (.0186) (.122) (.706) (1.84)[.204;1.14]<-.000681>
 PSI/DP   -.404  (.365) (1.31) (1.58)[-.439;.337][.0468;.505]<-.00879>

 PHI/DB   -.0950  (0) (.216) (-.240) (1.13) (-1.42)[.162;1.18]<-.0112>
 THE/DA    .0784  (0) (.0290) (-.153) (.708)[.423;1.06]<-.000280>

 PHI/DA ;THE/DB   -.0882  (0) (.0199) (.706)[.332;1.12]<-.00155>
 PHI/DA ;PSI/DP   -.205  (.0664) (.377) (1.19)[-.390;.342]<-.000712>
 THE/DB ;PSI/DP    .0723  (.0179) (.695) (1.84)[-.0372;.480]<.000380>

 PHI/DB ;PSI/DP    .0328  (.0832) (.844) (-1.37)[-.503;.114]<-.409E-4>
 PHI/DP ;THE/DB   -.0460  (0) (.0179) (.692) (-1.62) (1.73)<.00160>
 PHI/DC ;THE/DB   -.00906  (0) (.0220) (1.19)[-.0105;1.06]<-.000267>

 THE/DA ;PSI/DP   -.0324  (.0351) (-.548)[.997;.621]<.000241>
 THE/DP ;PHI/DA   -.00145  (0) (.0352) (.744)[.314;5.19]<-.00102>
 THE/DC ;PHI/DA    .0245  (0) (.0151) (.476)[.311;1.09]<.000210>

 PSI/DA ;THE/DB   -.00503  (.0199) (.704) (1.95)[-.318;1.61]<-.000357>
 PSI/DB ;PHI/DA    .0136  (.0698) (.329) (-.352)[-.101;1.50]<-.000247>
  XD/DP ;PHI/DA    .620  (0) (.777)[.330;1.13][.0562;2.03]<2.51>

  YD/DA ;THE/DB   -.157  (.0199) (.706)[.298;1.09][.0257;4.28]<-.0481>
  ZD/DB ;PHI/DA    1.87  (0) (.0211)[.335;1.13][.136;2.10]<.222>
  XD/DC ;PHI/DA   -.0764  (0) (.498)[.307;1.08][.128;3.13]<-.436>

  YD/DP ;THE/DB   -.253  (.0179) (.695) (1.72) (-1.76)[.276;2.32]<.0514>
  ZD/DC ;PHI/DA   -4.20  (0) (.215)[.278;.549][.362;1.11]<-.335>

 PHI/DA ;THE/DB ;PSI/DP    .0370  (.0175) (.0661) (.696)<.298E-4>
 PHI/DC ;THE/DB ;PSI/DP    .00324  (-.00269) (.0208) (.879)<-.160E-6>
 THE/DC ;PHI/DA ;PSI/DP   -.0103  (.00256) (.0587) (.421)<-.653E-6>

 PSI/DC ;PHI/DA ;THE/DB    .00107  (.0218) (.168) (-1.11)<-.512E-5>
  XD/DB ;PHI/DA ;PSI/DP   -.258  (.0659) (.777)[.0556;2.03]<-.0544>
  YD/DA ;THE/DB ;PSI/DP    .0706  (.0178) (.694)[.0242;4.09]<.0146>

  ZD/DC ;PHI/DA ;THE/DB    .663  (0) (.0199)[.339;1.12]<.0165>
  ZD/DC ;PHI/DA ;PSI/DP    1.76  (.0721) (.271)[.293;.487]<.00813>,
  XD/DC ;PHI/DA ;THE/DB   -.0173  (0) (-.266)[.339;1.07]<.00523>

  XD/DC ;PHI/DA ;PSI/DP    .0312  (.0498) (.432)[.137;3.15]<.00668>
  YD/DP ;PHI/DA ;THE/DB   -.0847  (.0176) (.677) (-1.97) (2.03)<.00402>
  ZD/DB ;PHI/DA ;PSI/DP   -.780  (.0225) (.0658)[.132;2.11]<-.00512>

  ZD/DC ;PHI/DA ;THE/DB ;PSI/DP   -.278  (.0178) (.0678)<-.000135>
  XD/DC ;PHI/DA ;THE/DB ;PSI/DP    .00735  (.0911) (-.342)<-.000229>
```

TABLE VI-5 CONTINUED

CH-53D TRANSFER FUNCTION FACTORS

CASE 187 80KT AFCS ON

```
DENOMINATOR:   (0) (.0141) (-.0231) (.0454) (.561) (.714) (.829) (4.99) [.644;1.54]<-.00276>

CONTROL NUMERATORS:
  PHI/DA    25.1  (0) (-.00715) (.0455) (.560) (.714) (.828) [.632;1.51]<-.00616>
  THE/DB   -8.53  (0) (.0141) (.0180) (-.0236) (.561) (.695) (1.07) (5.20) <.000111>
  PSI/DP    .119  (.0456) (.556) (.714) (.827) (4.72) [.0935;.293][.643;1.54]<.00172>

  PHI/DB   -4.18  (0) (.0776) (.561) (.823) (1.07) (-1.40) [-.364;.0935]<.00196>
  THE/DA    4.11  (0) (.0137) (.555) (.699) (.714) [.339;.0463]<.335E-4>

  PHI/DA ;THE/DB  -4.52  (0) (-.00787) (.0184) (.560) (.695) (1.07) <.000272>
  PHI/DA ;PSI/DP   .0607  (.0461) (.0656) (.556) (.714) (.827) [.632;1.51]<.000137>
  THE/DB ;PSI/DP  -.0214  (.0179) (.556) (.695) (1.07) (4.91) [.0998;.293]<-.667E-4>

  PHI/DB ;PSI/DP  -.00969  (.0832) (.556) (.844) (1.07) (-1.37) [-.503;.114]<.716E-5>
  PHI/DP ;THE/DB   .0136  (0) (.0179) (.556) (.692) (1.07) (1.66) (-1.69) <-.000281>
  PHI/DC ;THE/DB  -.392  (0) (-.0122) (.0193) (.561) (.851) (1.07) <.469E-4>

  THE/DA ;PSI/DP   .00958  (.0351) (-.548) (.556) (.714) [.997;.621]<-.282E-4>
  THE/DP ;PHI/DA   .000429  (0) (.0352) (.556) (.714) (.744) [.314;5.19]<.000120>
  THE/DC ;PHI/DA   1.26  (0) (-.00993) (.0120) (.410) (.559) (.714) <-.247E-4>

  PSI/DA ;THE/DB  -.0626  (-.00758) (.0184) (.556) (.695) (1.07) [.226;4.17]<.625E-4>
  PSI/DB ;PHI/DA   .0209  (.0842) (.556) (1.07) (1.48) (5.09) [-.528;.0743]<.438E-4>
   XD/DB ;PHI/DA   31.6  (0) (-.00730) (.560) (.777) (1.07) [.0556;2.03]<-.440>

   YD/DA ;THE/DB  -8.37  (-.00761) (.0184) (.560) (.695) (1.07) [.0234;4.16]<.00844>
   ZD/DB ;PHI/DA   95.4  (0) (-.00701) (.0220) (.560) (1.07) [.133;2.11]<-.0390>
   XD/DC ;PHI/DA  -3.81  (0) (-.00752) (.560) (.652) (.714) [-.230;2.85]<.0607>

   YD/DP ;THE/DB   .0749  (.0179) (.556) (.709) (1.07) (1.24) (-1.85) [.730;2.64]<-.00901>
   ZD/DC ;PHI/DA  -215.  (0) (-.00712) (.0420) (.560) (.714) [.555;1.64]<.0693>

  PHI/DA ;THE/DB ;PSI/DP  -.0109  (.0175) (.0661) (.556) (.696) (1.07) <-.522E-5>
  PHI/DC ;THE/DB ;PSI/DP  -.000959  (-.00269) (.0208) (.556) (.879) (1.07) <.280E-7>
  THE/DC ;PHI/DA ;PSI/DP   .00305  (.00256) (.0587) (.421) (.556) (.714) <.766E-7>

  PSI/DC ;PHI/DA ;THE/DB  -.00298  (-.0130) (.0196) (.556) (1.07) (2.01) <.898E-6>
   XD/DB ;PHI/DA ;PSI/DP   .0765  (.0659) (.556) (.777) (1.07) [.0556;2.03]<.00954>
   YD/DA ;THE/DB ;PSI/DP  -.0209  (.0178) (.556) (.694) (1.07) [.0242;4.09]<-.00256>

   ZD/DC ;PHI/DA ;THE/DB   33.9  (0) (-.00773) (.0186) (.560) (1.07) <-.00290>
   ZD/DC ;PHI/DA ;PSI/DP  -.520  (.0432) (.0648) (.556) (.714) [.555;1.64]<-.00156>
   XD/DC ;PHI/DA ;THE/DB  -.899  (0) (-.00541) (-.314) (.560) (1.07) <-.000917>

   XD/DC ;PHI/DA ;PSI/DP  -.00924  (.0613) (.556) (.656) (.714) [-.230;2.85]<-.00120>
   YD/DP ;PHI/DA ;THE/DB   .0250  (.0176) (.556) (.677) (1.07) (-1.97) (2.03) <-.000705>
   ZD/DB ;PHI/DA ;PSI/DP   .231  (.0225) (.0658) (.556) (1.07) [.132;2.11]<.000898>

   ZD/DC ;PHI/DA ;THE/DB ;PSI/DP   .0821  (.0178) (.0678) (.556) (1.07) <.588E-4>
   XD/DC ;PHI/DA ;THE/DB ;PSI/DP  -.00217  (.0911) (-.342) (.556) (1.07) <.402E-4>
```

TABLE VI-5 CONTINUED
CH-53D TRANSFER FUNCTION FACTORS

CASE 188 100KT AFCS OFF

DENOMINATOR: (0) (.191) (.367)[-.417;.318]X[.220;1.25]X[.990;1.51]<.0187>

CONTROL NUMERATORS:

PHI/DA .449 (0) (.345) (1.34)[-.429;.334]X[.337;1.28]<.0438>
THE/DB -.183 (0) (.0118) (.132) (.748) (1.83)[.216;1.25]<-.000609>
PSI/DP -.435 (.343)[-.502;.348]X[.0103;.492]X[.287;1.56]<-.0106>

PHI/DB -.114 (0) (.269) (-.289) (.975) (-1.01)[.188;1.22]<-.0130>
THE/DA .0835 (0) (.0985) (-.187) (.824)[.412;1.24]<-.001960>

PHI/DA ;THE/DB -.0899 (0) (.0248) (.736)[.328;1.28]<-.002690>
PHI/DA ;PSI/DP -.221 (.0817) (.359) (1.38)[-.486;.343]<-.00104>
THE/DB ;PSI/DP .0797 (.0223) (.725) (1.83)[-.0474;.687]<.0C0559>

PHI/DB ;PSI/DP .0404 (.628)[-.356;.0330]X[-.931;.513]<.720E-5>
PHI/DP ;THE/DB -.0536 (0) (.0222) (.729) (-1.74) (1.94)<.00291>
PHI/DC ;THE/DB -.0143 (0) (.0287) (.917)[.161;.977]<-.000359>

THE/DA ;PSI/DP -.0371 (.0461) (-.563) (.598) (.815)<.000471>
THE/DP ;PHI/DA -.00398 (0) (.0448) (.832)[.249;3.94]<-.00231>
THE/DC ;PHI/DA .0141 (0) (.0188) (.498)[.326;1.25]<.000489>

PSI/DA ;THE/DB -.00517 (.0251) (.720) (2.26)[-.334;1.54]<-.000503>
PSI/DB ;PHI/DA .0186 (.0676) (-.265) (.409)[-.00330;1.32]<-.000238>
XD/DB ;PHI/DA .544 (0) (.922)[.321;1.29]X[.0703;2.05]<1.48>

YD/DA ;THE/DB -.160 (.0253) (.747)[.291;1.23]X[.0415;4.30]<-.0848>
ZD/DB ;PHI/DA 2.48 (0) (.0395)[.323;1.29]X[.152;2.10]<.722>
XD/DC ;PHI/DA -.0408 (0) (.555)[.330;1.24]X[.212;4.82]<-.804>

YD/DP ;THE/DB -.278 (.0223) (.747) (1.96) (-2.09)[.318;2.23]<.0944>
ZD/DC ;PHI/DA -8.54 (0) (.144)[.294;.710]X[.351;1.30]<-.560>

PHI/DA ;THE/DB ;PSI/DP .0408 (.0224) (.0831) (.725)<.552E-4>
PHI/DC ;THE/DB ;PSI/DP .00548 (.654)[.977;.0236]<.200E-5>
THE/DC ;PHI/DA ;PSI/DP -.0155 (.0105) (.0767) (.465)<-.580E-5>

PSI/DC ;PHI/DA ;THE/DB .00168 (.0281) (.301) (-.346)<-.492E-5>
XD/DP ;PHI/DA ;PSI/DP -.243 (.0443) (.924)[.0696;2.05]<-.07911>
YD/DA ;THE/DB ;PSI/DP .0778 (.0211) (.727)[.0416;4.08]<.0199>

ZD/DC ;PHI/DA ;THE/DB .663 (0) (.0257)[.335;1.29]<.0283>
ZD/DC ;PHI/DA ;PSI/DP 2.05 (.3893) (.151)[.328;.696]<.0114>
XD/DC ;PHI/DA ;THE/DB -.0105 (0) (-.238)[.353;1.25]<.0113>

XD/DC ;PHI/DA ;PSI/DP .0159 (.0715) (.518)[.275;5.16]<.0157>
YD/DP ;PHI/DA ;THE/DB -.0900 (.0221) (.689) (-2.54) (2.67)<.00932>
ZD/DB ;PHI/DA ;PSI/DP -1.11 (.0430) (.3846)[.142;2.10]<-.3166>

ZD/DC ;PHI/DA ;THE/DB ;PSI/DP -.930 (.0241) (.0856)<-.0006119>
XD/DC ;PHI/DA ;THE/DB ;PSI/DP .0142 (.110) (-.252)<-.0001920>

MICROFILMED FROM
BEST AVAILABLE COPY

TABLE VI-5 CONTINUED
CH-53D TRANSFER FUNCTION FACTORS

CASE 188 100KT AFCS ON

DENOMINATOR: (0) (.0135) (-.0179) (.0509) (.560) (.714) (1.02) (4.89)[.679;1.83]<-.00291>

CONTROL NUMERATORS:

PHI/DA 30.5 (0) (-.00703) (.0509) (.559) (.714) (1.01)[.662; 1.81]<-.00871>
THE/DB -10.6 (0) (.00880) (-.0173) (.0260) (.560) (.722) (1.07) (5.15)<.935E-4>
PSI/DP .116 (.0509) (.556) (.714) (1.01) (4.66)[.108;.300][.681; 1.83]<.00203>

PHI/DB -5.98 (0) (.0525) (-.897) (1.07)[-.169;.152][.000;.586]<.00205>
THE/DA 5.35 (0) (-.0110) (-.0763) (.142) (.555) (.714) (.823) <.000208>

PHI/DA ;THE/DP -5.62 (0) (-.00777) (.0226) (.559) (.724) (1.07)<.000826>
PHI/DA ;PSI/DP .0598 (.0507) (.0888) (.556) (.714) (1.00)[.668;1.81]<.000200>
THE/DB ;PSI/DP -.0213 (.0222) (.556) (.725) (1.07) (4.88)[.113;.299]<-.888E-4>

PHI/DB ;PSI/DP -.0108 (.556) (.628) (1.07)[-.366;.0330][-.931;.510]<-.118E-5>
PHI/DP ;THE/DB .0143 (0) (.0222) (.556) (.729) (1.07) (-1.74) (1.92)<-.000868>
PHI/DC ;THE/DB -.750 (0) (-.00897) (.0232) (.562) (.607) (1.07)<.567E-4>

THE/DA ;PSI/DP .00988 (.0461) (.556) (-.563) (.598) (.714) (.815)<-.898E-4>
THE/DP ;PHI/DA .00106 (0) (.0449) (.556) (.718) (.832)[.249;3.98]<.000248>
THE/DC ;PHI/DA 2.18 (0) (-.00826) (.0161) (.458) (.558) (.718)<-.517E-4>

PSI/DA ;THE/DB -.0620 (-.00758) (.0226) (.556) (.726) (1.07)[.0770;8.16]<.795E-4>
PSI/DB ;PHI/DA .0301 (.0290) (.556) (1.07) (1.18) (7.68)[-.0496;.0898]<.176E-4>
YD/DB ;PHI/DA 33.6 (0) (-.00711) (.559) (.928) (1.07)[.0693;2.05]<-.551>

YD/DA ;THE/DB -10.7 (-.00760) (.0227) (.559) (.730) (1.07)[.0401;4.09]<.0134>
ZD/DB ;PHI/DA 154. (0) (-.00701) (.0401) (.559) (1.07)[.188;2.10]<-.118>
YD/DC ;PHI/DA -2.21 (0) (-.00712) (.559) (.718) (.928)[-.537;8.46]<.104>

YD/DP ;THE/DB .0742 (.0223) (.556) (1.07) (-2.23)[.994;.904][.769;2.89]<-.0149>
ZD/DC ;PHI/DA -283. (0) (-.00702) (.0482) (.559) (.718)[.533;1.66]<.106>

PHI/DA ;THE/DB ;PSI/DP -.0109 (.0224) (.0813) (.556) (.725) (1.07)<-.873E-5>
PHI/DC ;THE/DB ;PSI/DP -.00186 (.556) (.658) (1.07)[.977;.0236]<-.315E-6>
THE/DC ;PHI/DA ;PSI/DP .00818 (.0105) (.0767) (.465) (.556) (.718)<.618E-6>

PSI/DC ;PHI/DA ;THE/DB -.00228 (-.00973) (.0229) (.556) (1.07) (2.58)<.778E-6>
YD/DB ;PHI/DA ;PSI/DP .0648 (.0843) (.556) (.924) (1.07)[.0696;2.05]<.0125>
YD/DA ;THE/DB ;PSI/DP -.0207 (.0211) (.556) (.727) (1.07)[.0416;4.08]<-.00314>

ZD/DC ;PHI/DA ;THE/DB 81.3 (0) (-.00768) (.0237) (.559) (1.07)<-.00488>
ZD/DC ;PHI/DA ;PSI/DP -.586 (.0481) (.0844) (.556) (.718)[.539;1.66]<-.00243>
YD/DC ;PHI/DA ;THE/DB -1.96 (0) (-.00687) (-.224) (.559) (1.07)<-.00179>

YD/DC ;PHI/DA ;PSI/DP -.00425 (.0821) (.556) (.718) (.830)[-.538;8.47]<-.00230>
YD/DP ;PHI/DA ;THE/DB .0240 (.0221) (.556) (.689) (1.07) (-2.58) (2.67)<-.00167>
ZD/DB ;PHI/DA ;PSI/DP .297 (.0400) (.0846) (.556) (1.07)[.182;2.10]<.00263>

ZD/DC ;PHI/DA ;THE/DB ;PSI/DP .0799 (.0241) (.0856) (.556) (1.07)<.978E-4>
YD/DC ;PHI/DA ;THE/DB ;PSI/DP -.00178 (.110) (-.252) (.556) (1.07)<.620E-4>

TABLE VI-5 CONTINUED

CH-53D TRANSFER FUNCTION FACTORS

CASE 189 120KT AFCS OFF

DENOMINATOR: (0) (.172) (.254)[-.591;.336][.231;1.38][.976;1.67]<.0263>

CONTROL NUMERATORS:

PHI/DA .489 (0) (.299) (1.58)[-.585;.342][.338;1.45]<.0571>
THE/DB -.192 (0) (.0146) (.147) (.720) (1.85)[.227;1.36]<-.00101>
PSI/DP -.466 (.318)[-.615;.372][-.0475;.486][.976;1.70]<-.0141>

PHI/DB -.148 (0)[.829;.579][-.685;.583][.235;1.11]<-.0198>
THE/DA .0923 (0) (.136) (-.161) (.482)[.407;1.43]<-.00283>

PHI/DA ;THE/DB -.0944 (0) (.0300) (.732)[.329;1.45]<-.00434>
PHI/DA ;PSI/DP -.237 (.0977) (.327) (1.61)[-.626;.352]<-.00151>
THE/DB ;PSI/DP .0899 (.0272) (.724) (1.87)[-.3872;.507]<.000851>

PHI/DB ;PSI/DP .0541 (.457)[.121;.025][-.346;.855]<.1288-4>
PHI/DP ;THE/DB -.0616 (0) (.0272) (.788) (1.89) (2.20)<.00534>
PHI/DC ;THE/DB -.0183 (0) (.0344) (.588)[.337;1.19]<-.000477>

THE/DA ;PSI/DP -.0441 (.0523) (-.523) (.654) (.851)<.000672>
THE/DP ;PHI/DA -.00532 (0) (.0503) (.912)[.248;4.02]<-.00196>
THE/DC ;PHI/DA .0455 (0) (.0260) (.466)[.333;1.42]<.00112>

PSI/DA ;THE/DB -.00538 (.0305) (.724) (2.50)[-.392;1.51]<-.000674>
PSI/DB ;PHI/DA .0212 (.0787) (-.278) (.565)[-.0382;1.13]<-.000332>
XD/DB ;PHI/DA .474 (0) (1.12)[.316;1.44][.0720;2.03]<0.59>

YD/DA ;THE/DB -.171 (.0308) (.744)[.295;1.36][.0536;4.83]<-.137>
ZD/DB ;PHI/DA 3.06 (0) (.0528)[.312;1.45][.174;2.12]<1.52>
XD/DC ;PHI/DA .0108 (0) (.589) (4.70) (-7.71)[.345;1.42]<-1.32>

YD/DP ;THE/DB -.310 (.0271) (.771) (2.31) (-2.48)[.339;2.15]<.172>
ZD/DC ;PHI/DA -4.84 (0) (.122)[.286;.856][.347;1.49]<-.968>

PHI/DA ;THE/DB ;PSI/DP .0461 (.0274) (.101) (.726)<.9238-4>
PHI/DC ;THE/DB ;PSI/DP .00786 (.0290) (.0415) (.557)<.527E-5>
THE/DC ;PHI/DA ;PSI/DP -.0227 (.0284) (.0983) (.672)<-.203E-4>

PSI/DC ;PHI/DA ;THE/DB .00157 (.0349) (-.191) (.512)<-.396E-5>
XD/DB ;PHI/DA ;PSI/DP -.238 (.102) (1.12)[.0694;2.02]<-.107>
YD/DA ;THE/DB ;PSI/DP .0889 (.3258) (.727)[.0529;4.08]<.0278>

ZD/DC ;PHI/DA ;THE/DB .651 (0) (.0314)[.331;1.46]<.0436>
ZD/DC ;PHI/DA ;PSI/DP 2.34 (.112) (.118)[.312;.875]<.0239>
XD/DC ;PHI/DA ;THE/DB -.0505 (0) (-.0954)[.345;1.44]<.309946>

XD/DC ;PHI/DA ;PSI/DP -.0173 (.0918) (.576) (4.35) (-7.24)<.0289>
YD/DP ;PHI/DA ;THE/DB -.0962 (.0270) (.680) (-1.18) (3.12)<.0187>
ZD/DB ;PHI/DA ;PSI/DP -1.48 (.0513) (.101)[.156;2.11]<-.0360>

ZD/DC ;PHI/DA ;THE/DB ;PSI/DP -.317 (.0297) (.101)<-.000971>
XD/DC ;PHI/DA ;THE/DB ;PSI/DP .0249 (-.102) (.128)<-.000326>

TABLE VI-5 CONTINUED
CH-53D TRANSFER FUNCTION FACTORS

CASE 189 120KT AFCS ON

DENOMINATOR: . (0) (-.0155) (.0164) (.0582) (.559) (.714) (1.44) (4.83) [.701; 1.21]<-.0042>

CONTROL NUMERATORS:

PHI/DA	36.2	(0)	(-.00686)	(.0585)	(.558)	(.714)	(1.35) [.680; 1.24]<-.0121>
THR/DB	-11.0	(0)	(.0122)	(-.0149)	(.0299)	(.559)	(.716) (1.07) (5.18) <.000157>
PSI/DP	.114	(.0584)	(.556)	(.714)	(1.42)	(4.59)	[.101; .317][.706; 1.21]<.00265>
PHI/DB	-8.85	(0)	(.0469)	(.211)	(-.213)	(.557)	(1.07) [-.203; .509]<.00287>
THR/DA	6.95	(0)	(-.0104)	(-.0737)	(.148)	(.555)	(.714) (.881) <.000275>
PHI/DA ;THR/DB	-7.02	(0)	(-.00759)	(.0275)	(.558)	(.723)	(1.07) <.000631>
PHI/DA ;PSI/DP	.0582	(.0581)	(.103)	(.558)	(.718)	(1.35)	[.68; 1.24]<.000286>
THR/DB ;PSI/DP	-.0220	(.0272)	(.556)	(.725)	(1.07)	(4.89)	[.101; .313]<-.000124>
PHI/DB ;PSI/DP	-.0113	(.057)	(.556)	(1.07)	[.121; .0258][-.346; .855]<-.1782-5>
PHI/DP ;THR/DB	.0156	(0)	(.0272)	(.556)	(.740)	(1.07)	(-1.85) (2.25) <-.000175>
PHI/DC ;THR/DB	-1.19	(0)	(-.00698)	(.0277)	(.510)	(.555)	(1.07) <.6938-4>
THR/DA ;PSI/DP	.0108	(.0523)	(-.523)	(.556)	(.654)	(.714)	(.851) <-.6588-4>
THR/DP ;PHI/DA	.00130	(0)	(.0503)	(.556)	(.718)	(.912)	[.284; 4.02]<.000383>
THR/DC ;PHI/DA	3.40	(0)	(-.00748)	(.0276)	(.4[illegible]1)	(.558)	(.714) <-.000109>
PSI/DA ;THR/DB	-.0687	(-.00742)	(.0275)	(.556)	(.726)	(1.07)	[-.289; 8.16]<.9808-4>
PSI/DB ;PHI/DA	.381	(.0295)	(.556)	(1.0[illegible])	(1.07)	[-.00515; .0831]<.6838-4>
YD/DB ;PHI/DA	9[illegible].1	(0)	(-.00697)	(.[illegible]58)	(1.07)	(1.12)	[.0685; 2.02]<-.668>
YD/DA ;THR/DB	-11.9	(-.00741)	(.0275)	(.559)	(.733)	(1.07)	[.0509; 8.00]<.0199>
ZD/DB ;PHI/DA	226.	(0)	(-.00687)	(.0535)	(.558)	(1.07)	[.158; 2.12]<-.222>
YD/DC ;PHI/DA	27.7	(0)	(-.00691)	(.558)	(.714)	(.970)	(-1.93) <.161>
YD/DP ;THR/DB	.0761	(.0273)	(.556)	(1.07)	(-2.66)	[.967; .895][.797; 1.10]<-.0251>
ZD/DC ;PHI/DA	-358.	(0)	(-.00686)	(.0569)	(.558)	(.714)	[.512; 1.69]<.160>
PHI/DA ;THR/DB ;PSI/DP	-.0113	(.0274)	(.101)	(.556)	(.726)	(1.07) <-.1385-4>
PHI/DC ;THR/DB ;PSI/DP	-.00193	(.0290)	(.0415)	(.556)	(.[illegible]57)	(1.07) <-.7668-6>
THR/DC ;PHI/DA ;PSI/DP	.00566	(.0204)	(.0943)	(.472)	(.556)	(.714) <.1978-5>
PSI/DC ;PHI/DA ;THR/DB	-.00216	(-.00624)	(.0275)	(.556)	(1.07)	(2.61) <.5758-6>
YD/DB ;PHI/DA ;PSI/DP	.0563	(.102)	(.556)	(1.07)	(1.12)	[.0698; 2.02]<.0156>
YD/DA ;THR/DB ;PSI/DP	-.0218	(.0258)	(.556)	(.727)	(1.07)	[.0529; 8.08]<-.00604>
ZD/DC ;PHI/DA ;THR/DB	88.2	(0)	(-.00766)	(.0288)	(.558)	(1.07) <-.00634>
ZD/DC ;PHI/DA ;PSI/DP	-.575	(.0564)	(.103)	(.556)	(.714)	[.513; 1.69]<-.00178>
YD/DC ;PHI/DA ;THR/DB	-3.48	(0)	(-.00862)	(-.0742)	(.558)	(1.07) <-.00145>
YD/DC ;PHI/DA ;PSI/DP	.0446	(.0999)	(.556)	(.718)	(.971)	(-1.92) <-.00139>
YD/DP ;PHI/DA ;THR/DB	.0236	(.0270)	(.556)	(.680)	(1.07)	(-1.18) (3.32) <-.00272>
ZD/DB ;PHI/DA ;PSI/DP	.367	(.0513)	(.103)	(.556)	(1.07)	[.156; 2.11]<.00524>
ZD/DC ;PHI/DA ;THR/DB ;PSI/DP	.0776	(.0297)	(.103)	(.556)	(1.07) <.0001[illegible]1>
YD/DC ;PHI/DA ;THR/DB ;PSI/DP	-.00611	(-.102)	(.128)	(.556)	(1.07) <.8748-6>

TABLE VI-5 CONTINUED
CH-53D TRANSFER FUNCTION FACTORS

CASE 190 140KT AFCS OFF

DENOMINATOR: (0)[.953;.188][-.819;.350][.238;1.54][.963;1.86]<.0157>

CONTROL NUMERATORS:

PHI/DA .492 (0) (.268) (1.81)[-.759;.345][.340;1.65]<.0776>
THE/DB -.210 (0) (.0210) (.166) (.644) (1.93)[.244;1.48]<-.00200>
PSI/DP -.502 (.309)[-.745;.402][-.105;.451][.965;1.86]<-.0177>

PHI/DB -.178 (0)[.194;.168][-.333;1.34][.602;1.46]<-.0240>
THE/DA .106 (0) (.113) (-.131) (.931)[.402;1.63]<-.00390>

PHI/DA ;THE/DB -.105 (0) (.0352) (.720)[.336;1.63]<-.0705>
PHI/DA ;PSI/DP -.258 (.112) (.314) (1.83)[-.767;.355]<-.00208>
THE/DB ;PSI/DP .106 (.0336) (.732) (1.96)[-.155;.520]<.00138>

PHI/DB ;PSI/DP .0762 (-.0408) (.0465) (.347)[-.125;1.30]<-.842E-4>
PHI/DP ;THE/DB -.0795 (0) (.0336) (.769) (-2.01) (2.44)<.0101>
PHI/DC ;THE/DB -.0237 (0) (.0236) (.235)[.434;1.46]<-.000336>

THE/DA ;PSI/DP -.0550 (.0522) (-.457) (.766) (.821)<.000825>
THE/DP ;PHI/DA -.00816 (0) (.0493) (1.01)[.238;3.69]<-.00556>
THE/DC ;PHI/DA .0607 (0) (.0382) (.488)[.341;1.62]<.00298>

PSI/DA ;THE/DB -.00565 (.0356) (.730) (2.74)[-.524;1.52]<-.000936>
PSI/DP ;PHI/DA .0210 (.0854) (-.437) (1.04)[-.300;.698]<-.000436>
XD/DB ;PHI/DA .485 (0) (1.47)[.317;1.60][.0396;1.88]<6.31>

YD/DA ;THE/DB -.197 (.0360) (.732)[.301;1.50][.0891;8.36]<-.221>
ZD/DB ;PHI/DA 3.54 (0) (.0617)[.302;1.61][.195;2.24]<2.86>
XD/DC ;PHI/DA .120 (0) (.718) (2.89) (-3.57)[.362;1.64]<-2.39>

YD/DP ;THE/DB -.365 (.0337) (.825) (2.69) (-2.87)[.372;2.04]<.326>
ZD/DC ;PHI/DA -4.98 (0) (.906)[.264;1.08][.341;1.72]<-1.82>

PHI/DA ;THE/DB ;PSI/DP .0551 (.0334) (.118) (.731)<.000158>
PHI/DC ;THE/DB ;PSI/DP .0114 (.0342) (.0598) (.964)<.108E-4>
THE/DC ;PHI/DA ;PSI/DP -.0321 (.0366) (.112) (.521)<-.686E-4>

PSI/DC ;PHI/DA ;THE/DB .00146 (1.11)[.813;.0374]<.226E-5>
XD/DB ;PHI/DA ;PSI/DP -.255 (.119) (1.47)[.0294;1.83]<-.149>
YD/DA ;THE/DB ;PSI/DP .110 (.0319) (.730)[.0838;4.08]<.0424>

ZD/DC ;PHI/DA ;THE/DB .621 (0) (.0331)[.333;1.65]<.0560>
ZD/DC ;PHI/DA ;PSI/DP 2.59 (.109) (.122)[.277;1.16]<.0462>
XD/DC ;PHI/DA ;THE/DB -.0854 (0) (.111)[.341;1.64]<-.0254>

XD/DC ;PHI/DA ;PSI/DP -.0618 (.112) (.748) (2.96) (-3.69)<.0566>
YD/DP ;PHI/DA ;THE/DB -.107 (.0330) (.676) (-3.89) (4.01)<.0374>
ZD/DB ;PHI/DA ;PSI/DP -1.84 (.0627) (.121)[.168;2.23]<-.0692>

ZD/DC ;PHI/DA ;THE/DB ;PSI/DP -.325 (.0312) (.121)<-.00123>
XD/DC ;PHI/DA ;THE/DB ;PSI/DP .0450 (.0767) (.176)<.000609>

TABLE VI-5 CONTINUED
CH-53D TRANSFER FUNCTION FACTORS

CASE 190 140KT AFCS ON

DENOMINATOR: ;0) (-.0134) (.0217) (.0616) (.559) (.714) (2.03) (4.74) [.678; 1.10]<-.006384>

CONTROL NUMERATORS:

PHI/DA 41.6 (0) (-.00669) (.0648) (.558) (.714) (1.78) [.667; 1.13]<-.0164>
THE/DB -15.9 (0) (-.0127) (.559) (.715) (1.07) (5.31) [.984; .0253]<.000291>
PSI/DP .112 (.0643) (.556) (.714) (2.00) (4.50) [.0743; .335][.689; 1.10]<.003448>

PHI/DB -11.3 (0) (.0155) (-.131) (.169) (.557) (1.07) [-.0308; 1.08]<.00315>
THE/DA 9.05 (0) (-.00942) (-.0690) (.157) (.554) (.714) (.934) <.000341>

PHI/DA ;THE/DB -8.88 (0) (-.00727) (.0332) (.558) (.728) (1.07) <.000929>
PHI/DA ;PSI/DP .0573 (.0639) (.122) (.556) (.714) (1.79) [.668; 1.12]<.0003999>
THE/DB ;PSI/DP -.0236 (.0336) (.556) (.731) (1.07) (4.97) [.0693; .327]<-.0001822>

PHI/DB ;PSI/DP -.0169 (-.0808) (.0465) (.387) (.556) (1.07) [-.125; 1.30]<.1118-4>
PHI/DP ;THE/DB .0177 (0) (.0336) (.556) (.768) (1.07) (-1.91) (2.56) <-.001324>
PHI/DC ;THE/DB -1.82 (0) (-.00293) (.0341) (.411) (.557) (1.07) <.4448-4>

THE/DA ;PSI/DP .0122 (.0522) (-.467) (.556) (.714) (.766) (.821) <-.7288-4>
THE/DP ;PHI/DA .00182 (0) (.0493) (.556) (.714) (1.01) [.238; 3.69]<.0004909>
THE/DC ;PHI/DA 5.18 (0) (-.00667) (.0372) (.513) (.557) (.714) <-.0002633>

PSI/DA ;THE/DB -.0716 (-.00710) (.0332) (.556) (.731) (1.07) [-.745; 4.11]<.0001239>
PSI/DB ;PHI/DA .625 (.0247) (.557) (.939) (1.07) [.0702; .0818]<.5758-4>
XD/DB ;PHI/DA 41.1 (0) (-.00689) (.558) (1.07) (1.47) [.0260; 1.83]<-.831>

YD/DA ;THE/DB -18.6 (-.00711) (.0333) (.558) (.741) (1.07) [.0818; 3.87]<.02929>
ZD/DB ;PHI/DA 298. (0) (-.00671) (.0634) (.558) (1.07) [.170; 2.23]<-.376>
XD/DC ;PHI/DA 10.0 (0) (-.00668) (.558) (.714) (-.930) (1.24) (5.70) <.176>

YD/DP ;THE/DB .0812 (.0337) (.556) (1.07) (-3.08) [.924; .975][.827; 3.35]<-.04304>
ZD/DC ;PHI/DA -419. (0) (-.00669) (.0643) (.558) (.714) [.476; 1.82]<.237>

PHI/DA ;THE/DB ;PSI/DP -.0122 (.0338) (.118) (.556) (.731) (1.07) <-.2098-4>
PHI/DC ;THE/DB ;PSI/DP -.00253 (.0342) (.0598) (.568) (.556) (1.07) <-.1828-5>
THE/DC ;PHI/DA ;PSI/DP .00718 (.0366) (.112) (.521) (.556) (.714) <.6058-5>

PSI/DC ;PHI/DA ;THE/DB -.00307 (.00263) (.0340) (.556) (1.07) (1.83) <-.2988-6>
XD/DB ;PHI/DA ;PSI/DP .0567 (.119) (.556) (1.07) (1.47) [.0294; 1.83]<.0997>
YD/DA ;THE/DB ;PSI/DP -.0244 (.0319) (.556) (.730) (1.07) [.0838; 4.08]<-.005509>

ZD/DC ;PHI/DA ;THE/DB 52.4 (0) (-.00780) (.0303) (.558) (1.07) <-.007177>
ZD/DC ;PHI/DA ;PSI/DP -.576 (.0635) (.121) (.556) (.714) [.477; 1.81]<-.005755>
XD/DC ;PHI/DA ;THE/DB -7.25 (0) (-.00592) (.131) (.558) (1.07) <.001355>

XD/DC ;PHI/DA ;PSI/DP .0137 (.116) (.556) (.714) (-.930) (1.24) (5.72) <-.008417>
YD/DP ;PHI/DA ;THE/DB .0239 (.0330) (.556) (.676) (1.07) (-3.99) (4.01) <-.008493>
ZD/DB ;PHI/DA ;PSI/DP .409 (.0627) (.121) (.556) (1.07) [.168; 2.23]<.009129>

ZD/DC ;PHI/DA ;THE/DB ;PSI/DP .0723 (.0312) (.121) (.556) (1.07) <.0001629>
XD/DC ;PHI/DA ;THE/DB ;PSI/DP -.0100 (.0767) (.176) (.556) (1.07) <-.8038-4>

TABLE VI-5 CONTINUED

CH-53D TRANSFER FUNCTION FACTORS

CASE 191 150KT AFCS ON

DENOMINATOR: (0) (-.0121) (.0222) (.0689) (.559) (.714) (2.45) (4.61) [.680;1.06]<-.00749>

CONTROL NUMERATORS:

PHI/DA 88.9 (0) (-.00628) (.0718) (.557) (.714) (2.06) [.673;1.09]<-.0197>
THR/DB -18.4 (0) (-.0116) (.0229) (.0324) (.559) (.699) (1.07) (5.84)<.000358>
PSI/DP .112 (.0711) (.556) (.714) (2.39) (4.41) [.0527;.343][.697;1.05]<.00426>

PHI/DB -17.1 (0) (.0207) (-.112) (.158) (.557) (1.07) [-.000136;1.17]<.00508>
THR/DA -1.21 (0) (-.00961) (-.0662) (.178) (.552) (.714) (.985) (-8.04)<.000411>

PHI/DA ;THR/DB -10.5 (0) (-.00714) (.0383) (.558) (.714) (1.07)<.00122>
PHI/DA ;PSI/DP .0575 (.0704) (.133) (.556) (.714) (2.08) [.674;1.07]<.000511>
THR/DB ;PSI/DP -.0258 (.0387) (.556) (.723) (1.07) (5.06) [.0466;.330]<-.000236>

PHI/DB ;PSI/DP -.0202 (-.0306) (.0528) (.348) (.556) (1.07) [-.0985;1.39]<.1318-4>
PHI/DP ;THR/DB .0200 (0) (.0387) (.556) (.771) (1.07) (-1.33) (2.69)<-.00183>
PHI/DC ;THR/DB -2.34 (0) (-.00271) (.0390) (.397) (.557) (1.07)<.5908-4>

THR/DA ;PSI/DP -.00157 (.0570) (-.527) (.556) (.714) (-7.80) [.989;.890]<-.000116>
THR/DP ;PHI/DA .00342 (0) (.0545) (.556) (.714) (1.00) [.220;3.39]<.000856>
THR/DC ;PHI/DA 6.10 (0) (-.00630) (.0427) (.497) (.557) (.714)<-.000325>

PSI/DA ;THR/DB -.0801 (-.00700) (.0382) (.556) (.716) (1.07) (-2.87) (-5.82)<.000152>
PSI/DB ;PHI/DA .847 (.0327) (.556) (.903) (1.07) [.0616;.0762]<.8638-4>
XD/DB ;PHI/DA 45.1 (0) (-.00661) (.557) (1.07) (1.57) [-.0106;1.81]<-.919>

YD/DA ;THR/DB -22.5 (-.00701) (.0384) (.558) (.729) (1.07) [.0899;3.85]<.0388>
ZD/DB ;PHI/DA 332. (0) (-.00636) (.0718) (.557) (1.07) [.184;2.35]<-.497>
XD/DC ;PHI/DA 12.5 (0) (-.00629) (.558) (.714) (-.777) (1.25) (5.99)<.182>

YD/DP ;THR/DB .0849 (.0389) (.556) (1.07) (-3.41) [.888;.832][.830;3.59]<-.0598>
ZD/DC ;PHI/DA -849. (0) (-.00628) (.0716) (.557) (.714) [.496;1.90]<.290>

PHI/DA ;THR/DB ;PSI/DP -.0116 (.0384) (.126) (.556) (.719) (1.07)<-.2808-4>
PHI/DC ;THR/DB ;PSI/DP -.00303 (.0393) (.0671) (.454) (.556) (1.07)<-.2158-5>
THR/DC ;PHI/DA ;PSI/DP .00785 (.0418) (.118) (.509) (.556) (.714)<.7818-5>

PSI/DC ;PHI/DA ;THR/DB -.00332 (0) (.0387) (.556) (1.07) (1.88)<-.000184>
XD/DB ;PHI/DA ;PSI/DP .0581 (.129) (.556) (1.07) (1.57) [-.00533;1.81]<.0228>
YD/DA ;THR/DB ;PSI/DP -.0270 (.0364) (.556) (.711) (1.07) [.0917;4.11]<-.00705>

ZD/DC ;PHI/DA ;THR/DB 60.2 (0) (-.00790) (.0387) (.557) (1.07)<-.00982>
ZD/DC ;PHI/DA ;PSI/DP -.575 (.0705) (.131) (.556) (.714) [.498;1.89]<-.00752>
YD/DC ;PHI/DA ;THR/DB -9.06 (0) (-.00595) (.132) (.557) (1.07)<.00389>

XD/DC ;PHI/DA ;PSI/DP .0159 (.123) (.556) (.714) (-.784) (1.23) (6.03)<-.00458>
YD/DP ;PHI/DA ;THR/DB .0237 (.0379) (.556) (.644) (1.07) (-4.51) (4.58)<-.00708>
ZD/DB ;PHI/DA ;PSI/DP .424 (.0705) (.131) (.556) (1.07) [.181;2.34]<.0127>

ZD/DC ;PHI/DA ;THR/DB ;PSI/DP .0776 (.0360) (.131) (.556) (1.07)<.000217>
XD/DC ;PHI/DA ;THR/DB ;PSI/DP -.0117 (.0765) (.188) (.556) (1.07)<-.9978-4>

MICROFILMED FROM
BEST AVAILABLE COPY

TABLE VI-5 CONCLUDED
CH-53D TRANSFER FUNCTION FACTORS

CASE 191 150KT AFCS OFF

DENOMINATOR: (0)[.927;.191]X[-.898;.354]X[.242;1.58]X[.961;1.94]<.3480>

CONTROL NUMERATORS:

PHI/DA .493 (0) (.257) (1.93)[-.840;.345]X[.354;1.71]<.0861>
THE/DP -.228 (0) (.0204) (.176) (.692) (2.00)[.236;1.54]<-.00251>
PSI/DP -.538 (.117)[-.826;.428]X[-.108;.431]X[.965;1.95]<-.0221>

PHI/DB -.201 (0)[.156;.220]X[.547;1.36]X[-.186;1.50]<-.0415>
THE/DA -.0122 (0) (.115) (-.159) (.981) (-8.67)[.442;1.07]<-.00507>

PHI/DA ;THE/DB -.116 (0) (.0416) (.711)[.345;1.70]<-.00992>
PHI/DA ;PSI/DP -.277 (.117) (.328) (1.97)[-.862;.361]<-.00270>
THE/DP ;PSI/DP .124 (.0387) (.730) (2.03)[-.191;.519]<.00192>

PHI/DB ;PSI/DP .0972 (-.0306) (.0528) (.348)[-.0945;1.39]<-.000136>
PHI/DP ;THE/DP -.0963 (0) (.0387) (.773) (-2.05) (2.53)<.0150>
PHI/DC ;THE/DB -.0295 (0) (.0327) (.242)[.452;1.43]<-.000478>

THE/DA ;PSI/DP .00757 (.0573) (-.527) (-7.83)[.989;.890]<.00140>
THE/DP ;PHI/DA -.0164 (0) (.0545) (1.00)[.220;3.39]<-.0104>
THE/DC ;PHI/DA .0667 (0) (.0445) (.472)[.353;1.68]<.00394>

PSI/DA ;THE/DB -.00496 (.0424) (.715) (2.75)[-.756;1.72]<-.00123>
PSI/DB ;PHI/DA .0187 (.0965) (-.334) (.832)[-.342;1.18]<-.000760>
XD/DB ;PHI/DA .499 (0) (1.59)[.319;1.68]X[.00705;1.82]<7.47>

YD/DA ;THE/DB -.222 (.0429) (.726)[.292;1.53]X[.108;4.37]<-.312>
ZD/DB ;PHI/DA 3.69 (0) (.0687)[.311;1.70]X[.204;2.34]<9.04>
XD/DC ;PHI/DA .142 (0) (.713) (2.89) (-3.20)[.380;1.70]<-2.69>

YD/DP ;THE/DB -.409 (.0389) (.850) (2.89) (-3.14)[.197;1.99]<.485>
ZD/DC ;PHI/DA -5.00 (0) (.111)[.274;1.13]X[.355;1.80]<-2.30>

PHI/DA ;THE/DB ;PSI/DP .0652 (.0384) (.126) (.718)<.000227>
PHI/DC ;THE/DB ;PSI/DP .0146 (.0393) (.0671) (.458)<.174E-4>
THE/DC ;PHI/DA ;PSI/DP -.0378 (.0418) (.118) (.509)<-.946E-4>

PSI/DC ;PHI/DA ;THE/DB .00237 (.832)[.847;.0467]<.431E-5>
XD/DB ;PHI/DA ;PSI/DP -.279 (.129) (1.57)[-.00513;1.81]<-.185>
YD/DA ;THE/DB ;PSI/DP .130 (.0164) (.711)[.0917;4.13]<.0572>

ZD/DC ;PHI/DA ;THE/DB .673 (0) (.0396)[.343;1.73]<.0798>
ZD/DC ;PHI/DA ;PSI/DP 2.76 (.115) (.136)[.295;1.22]<.0641>
XD/DC ;PHI/DA ;THE/DB -.0999 (0) (.108)[.354;1.71]<-.0316>

XD/DC ;PHI/DA ;PSI/DP -.0763 (.118) (.732) (3.04) (-1.35)<.0674>
YD/DP ;PHI/DA ;THE/DP -.114 (.0379) (.644) (-4.51) (4.58)<.0574>
ZD/DB ;PHI/DA ;PSI/DP -2.04 (.0705) (.131)[.181;2.34]<-.103>

ZD/DC ;PHI/DA ;THE/DB ;PSI/DP -.373 (.0360) (.111)<-.00176>
XD/DC ;PHI/DA ;THE/DB ;PSI/DP .0561 (.0765) (.188)<.000809>

REFERENCES

1. Heffley, Robert K., A Compilation and Analysis of Helicopter Handling Qualities Data, Volume Two: Data Analysis, Systems Technology, Inc. TR 1087-2, March 1978.

2. McRuer, Duane, Irving Ashkenas, and Dunstan Graham, Aircraft Dynamics and Automatic Control, Princeton University Press: Princeton, New Jersey, 1973.

3. Siegel, Eleanor, Stability and Control Data Summary for Single Rotor Helicopter, Hughes OH-6A, Hughes Report No. 369-V-8010, April 1975.

4. McLaughlin, J. J., Stability and Control Data for the BO-105 Helicopter, Boeing Vertol Report No. D212-10035-1, May 1975.

5. Davis, John M., Stability and Control Data Summaries for the AH-1G and UH-1H Helicopters, Bell Helicopter Co. Report No. 699-099-012, January 1976.

6. CH-53D Data Submitted to NASA by Sikorsky Aircraft via Transmittal Letter SEL 9345 of 17 October 1975.

7. Taylor, John W. R. (ed.), Jane's All the World's Aircraft 1973-74, Sixty-Fourth Year of Issue, McGraw-Hill Book Company: New York, N.Y., 1973.

8. Nagata, John I., and John J. Shapley, Jr., Engineering Flight Test of the OH-6A Helicopter (Cayuse), Phase D Final Report, USAASTA Report, April 1969.

9. Staley, James A., Validation of Rotorcraft Flight Simulation Program Through Correlation with Flight Data for Soft-in-Plane Hingeless Rotors, USAAMRDL-TR-75-50, January 1976.

10. Finnestead, Rodger, L., et al, Engineering Flight Test, AH-1G Helicopter (Hueycobra), USAASTA Project No. 66-06, December 1970.

11. Dominick, Floyd and Emery E. Nelson, Engineering Flight Test, YUH-1H Helicopter, USAASTA Project No. 66-04, November 1970.

12. Briczinsky, S. J., Validation of the Rotorcraft Flight Simulation Program (C-81) for Articulated Rotor Helicopters Through Correlation with Flight Data, USAAMRDL-TR-76-4, May 1976.

13. NATOPS Flight Manual, Navy Model CH-53A/D Helicopters, NAVAIR 01-230HMA-1, 15 March 1971.

APPENDIX A

PROCEDURE FOR FORMULATING EQUATIONS OF MOTION

The following pages illustrate the procedure used in formulating the equations of motion used in the calculation of the transfer function data.

In expressing equations of motion the objective was to input body-fixed FRL stability and control derivatives and to compute transfer functions in terms of earth-fixed earth-frame velocities and body-frame Euler angles. In doing so, it was important to minimize the number of equations for reasons of computational economy.

A means of accomplishing this is to develop a general matrix algebra scheme for directly expressing the six equations of motion in terms of the six desired states. This avoids use of auxiliary equations but requires handling second-order linear differential equations.

In order to describe the algebraic manipulations, matrix equations are expressed in a simple form involving the following features:

1. A reference frame transformation of velocity components from earth to body (FRL) is expressed as

$$\underset{B}{V} = T_{B/E} \underset{E}{V}$$

where $\underset{B}{V}$ is the set of body velocities

$\underset{E}{V}$ is the set of earth velocities

and $T_{B/E}$ is the transformation matrix between the two reference frames and is a function of the body Euler angles, η.

3. Perturbation quantities are denoted by the differential operator, Δ, thus:

$$\underset{B}{\Delta V} = \Delta T_{B/E} \underset{E}{V(0)} + T_{B/E}(0) \underset{E}{\Delta V}$$

where $\underset{B}{\Delta V}$ and $\underset{E}{\Delta V}$ are perturbation velocities in the respective reference frames. $\Delta T_{B/E}$ represents a transformation matrix perturbation in terms of perturbation Euler angles, $\Delta\eta_i$, and by definition, $\frac{\partial V}{\partial \eta_i} \Delta\eta_i \triangleq \Delta T_{B/E} \underset{E}{V(0)}$ where $\underset{E}{V(0)}$ and $T_{B/E}(0)$ represent operating point quantities.

5. Angular rates are expressed in terms of a transformation of Euler angle rates, or $\underset{B}{\omega} = T_{\dot\eta_i} \dot\eta_i$ and $\underset{B}{\Delta\omega} = \Delta T_{\dot\eta_i} \dot\eta_i(0) + T_{\dot\eta_i}(0) \Delta\dot\eta_i$. For our purposes $\dot\eta_i(0) = 0$ since only straight flight conditions are involved.

4. Body reference forces and moments are represented as:

$$\frac{1}{m} \underset{B}{F} \quad \text{and} \quad \underset{B}{I^{-1}} \underset{B}{M}$$

and perturbations as:

$$\frac{1}{m} \underset{B}{\Delta F} = \underset{B}{F_V} \underset{B}{\Delta V_a} + \underset{B}{F_\omega} \underset{B}{\Delta\omega_a} + \underset{B}{F_\delta} \Delta\delta$$

$$\underset{B}{I^{-1}} \underset{B}{\Delta M} = \underset{B}{M_V} \underset{B}{\Delta V_a} + \underset{B}{M_\omega} \underset{B}{\Delta\omega_a} + \underset{B}{M_\delta} \Delta\delta$$

where $\underset{B}{F_V}$, $\underset{B}{F_\omega}$, etc. are sets of body reference dimensional stability and control derivatives (e.g., X_u, X_v, X_w, etc.). $\underset{B}{\Delta V_a}$, $\underset{B}{\Delta\omega_a}$ are velocity and velocity gradient components relative to the air mass

with $\Delta V_{B^a} = \Delta V_B - \Delta V_{B^g}$, $\Delta\omega_{B^a} = \Delta\omega_B - \Delta\omega_{B^g}$ where ΔV_B and ΔV_{B^g} are inertial velocities and gust velocities respectively, likewise for $\Delta\omega_B$ and $\Delta\omega_{B^g}$.

As a starting point for forming the desired equations of motion we consider the force equations expressed in an earth-aligned reference frame.

$$\dot{V}_E = T_{E/B} \frac{1}{m} F_B + g_E - \Omega^E V_E$$

(neglect)

g_E represents the gravity specific force and $\Omega^E V_E$ is the Coriolis force due to earth rotation (which is neglected).

The perturbation equation is thus:

$$\Delta\dot{V}_E = \Delta T_{E/B} \frac{1}{m} F(0)_B + T_{E/B}(0) \frac{1}{m} \Delta F_B + \Delta g_E$$

and, the initial conditions are:

$$0 = T_{E/B}(0) \frac{1}{m} F(0)_B + g_E$$

or $$\frac{1}{m} F(0)_B = -T_{B/E}(0) g_E$$

(note $T_{B/E} = T_{E/B}^T$)

Substituting into the perturbation equation:

$$\Delta\dot{V}_E = -\Delta T_{E/B} T_{B/E}(0) g_E + T_{E/B}(0) \frac{1}{m} \Delta F_B$$

and $$\frac{\partial G}{\partial \eta} \Delta\eta_B = \Delta T_{E/B} T_{B/E}(0) g_E$$

recall $\frac{1}{m}\Delta F_B = f(\Delta V_b, \Delta\omega_B, \Delta\alpha, \Delta V_{B_E}, \Delta\omega_{B_E})$

and $\Delta V_B = \Delta T_{B/E}\, V(0)_E + T_{B/E}(0)\, \Delta V_E$

thus:

$$\Delta\dot{V}_E = -\frac{\partial G}{\partial\eta_i}\Delta\eta_{i_B} + T_{E/B}(0)\, F_{B_V}\, \frac{\partial V}{\partial\eta_i}\Delta\eta_i + T_{E/B}(0)\, F_{B_V}\, T_{B/E}(0)\, \Delta V_E + T_{E/B}(0)\, F_{B_\omega}\, T\dot{\eta}_i(0)\, \Delta\dot{\eta}_i + T_{E/B}(0)\, F_{B_b}\, \Delta b + \text{gust terms}$$

This represents three equations of motion expressed strictly in terms of the desired states, ΔV_E and $\Delta\eta_i$, and controls, $\Delta\delta$.

The moment equations can be manipulated in a similar manner:

$$\dot{h}_B = I_B^{-1}\, M_B$$

or $\Delta\dot{h}_B = I_B^{-1}\, \Delta M_B$

since $\Delta\omega_B = T_{\dot{\eta}_i}(0)\, \dot{\Delta\eta}_{i_B}$

$$\Delta\dot{h}_B = T_{\dot{\eta}_i}(0)\, \ddot{\Delta\eta}_{i_B}$$

or $\ddot{\Delta\eta}_{i_B} = T_{\dot{\eta}_i}^{-1}(0)\, \Delta\dot{h}_B$

thus:

$$\Delta\ddot{\eta}_i = T_{\eta_i}^{-1}(0)\ M_{B}^{V}\ \frac{\partial V}{\partial \eta_i}\ \Delta\eta_i + T_{\eta_i}^{-1}(0)\ M_{B}^{V}\ T_{B/E}(0)\ \Delta V_{E} + T_{\eta_i}^{-1}(0)\ M_{B}^{\omega}\ T_{\eta_i}(0)\ \Delta\dot{\eta}_i + T_{\eta_i}^{-1}(0)\ M_{B}^{\omega}\ \Delta\omega + \text{gust terms}$$

Hence, a second set of three equations is formed in terms of the desired states and controls.

As a final step in the general development, consider the introduction of gust disturbances. If the gust components are expressed in a body-fixed earth frame:

$$\Delta V_{BG} = T_{B/E}(0)\ \Delta V_{EG}$$

$$\text{and } \Delta\omega_{BG} = T_{B/E}(0)\ \Delta\omega_{EG}$$

Therefore, the force and moment equations include the following additional gust terms:

$$\Delta\dot{V}_{E} = \ldots - T_{E/B}(0)\ F_{B}^{V}\ T_{B/E}(0)\ \Delta V_{BG} - T_{E/B}(0)\ F_{B}^{\omega}\ T_{B/E}(0)\ \Delta\omega_{EG}$$

$$\text{and } \Delta\ddot{\eta}_i = \ldots - T_{\eta_i}^{-1}(0)\ M_{E}^{V}\ T_{B/E}(0)\ \Delta V_{EG} - T_{\eta_i}^{-1}(0)\ M_{V}^{\omega}\ T_{B/E}(0)\ \Delta\omega_{EG}$$

To summarize, the equations of motion can be expressed in the following manner:

$$\left[s^2C_2 + sC_1 + C_o\right]\begin{bmatrix}\dot{x}\\ \dot{y}\\ \dot{z}\\ \dot{\psi}\\ \dot{\theta}\\ \dot{\phi}\end{bmatrix} = \left[D\right]\begin{bmatrix}\delta_c\\ \delta_A\\ \delta_B\\ \delta_p\end{bmatrix} + \left[E\right]\begin{bmatrix}u_g\\ v_g\\ w_g\\ p_g\\ q_g\\ r_g\end{bmatrix}$$

The matrices C_2, C_1, C_o, D, and E can be inferred from the matrix equations shown in Table A-1. The elements of these matrices are given in Table A-2. The required input data is therefore the following sixty-six quantities:

$\dot{x}_o$, $\dot{h}_o$, θ_o, ψ_o, ϕ_o, $\mathcal{E}$

X_u, X_v, X_w, X_p, X_q, X_r, X_{δ_c}, X_{δ_A}, X_{δ_B}, X_{δ_p}

Y_u, Y_v, Y_w, Y_p, Y_q, Y_r, Y_{δ_c}, Y_{δ_A}, Y_{δ_B}, Y_{δ_p}

Z_u, Z_v, Z_w, Z_p, Z_q, Z_r, Z_{δ_c}, Z_{δ_A}, Z_{δ_B}, Z_{δ_p}

L'_u, L'_v, L'_w, L'_p, L'_q, L'_r, L'_{δ_c}, L'_{δ_A}, L'_{δ_B}, L'_{δ_p}

M_u, M_v, M_w, M_p, M_q, M_r, M_{δ_c}, M_{δ_A}, M_{δ_B}, M_{δ_p}

N'_u, N'_v, N'_w, N'_p, N'_q, N'_r, N'_{δ_c}, N'_{δ_A}, N'_{δ_B}, N'_{δ_p}

TABLE A-1

MATRIX EQUATIONS OF MOTION

$$\begin{bmatrix} \begin{bmatrix} sI - T_{E/B}(0) & F_{B}^{V}\, T_{B/E}(0) \end{bmatrix} & \begin{bmatrix} -s\, T_{E/B}(0) & F_{B}^{\omega}\, T_{\dot{\eta}}(0) + \frac{\partial G}{\partial \eta} - T_{E/B}(0) & F_{B}^{V} \frac{\partial V}{\partial \eta} \end{bmatrix} \\ \begin{bmatrix} -T_{\dot{\eta}}^{-1}(0) & M_{B}^{V}\, T_{B/E}(0) \end{bmatrix} & \begin{bmatrix} s^2 I - sT_{\dot{\eta}}^{-1}(0) & M_{B}^{\omega}\, T_{\dot{\eta}}(0) & - T_{\dot{\eta}}^{-1}(0) & M_{B}^{V} \frac{\partial V}{\partial \eta} \end{bmatrix} \end{bmatrix} \begin{bmatrix} \Delta V_E \\ \Delta \eta \end{bmatrix}$$

$$= \begin{bmatrix} \begin{bmatrix} T_{E/B}(0) & F_{B}^{\delta} \end{bmatrix} & \begin{bmatrix} -T_{E/B}(0) & F_{B}^{V}\, T_{B/E}(0) \end{bmatrix} & \begin{bmatrix} -T_{E/B}(0) & F_{B}^{\omega}\, T_{B/E}(0) \end{bmatrix} \\ \begin{bmatrix} T_{\dot{\eta}}^{-1}(0) & M_{B}^{\delta} \end{bmatrix} & \begin{bmatrix} -T_{\dot{\eta}}^{-1}(0) & M_{B}^{V}\, T_{B/E}(0) \end{bmatrix} & \begin{bmatrix} -T_{\dot{\eta}}^{-1}(0) & M_{B}^{\omega}\, T_{B/E}(0) \end{bmatrix} \end{bmatrix} \begin{bmatrix} \Delta\delta \\ \Delta V_E \\ \Delta\omega_E \end{bmatrix}$$

TABLE A-2

MATRIX ELEMENTS

$$\underset{E}{g}^T = [0\ 0\ g]$$

$$\underset{E}{V}^T(0) = [\dot{x}_o\ \dot{y}_o\ \dot{z}_o] \quad (\dot{y}_o = 0 \text{ by definition})$$

$$\underset{B}{F_V} = \begin{bmatrix} X_u & X_v & X_w \\ Y_u & Y_v & Y_w \\ Z_u & Z_v & Z_w \end{bmatrix} \quad \underset{B}{F_\omega} = \begin{bmatrix} X_p & X_q & X_r \\ Y_p & Y_q & Y_r \\ Z_p & Z_q & Z_r \end{bmatrix} \quad \underset{B}{F_\delta} = \begin{bmatrix} X_{\delta_C} & X_{\delta_A} & X_{\delta_B} & X_{\delta_p} \\ Y_{\delta_C} & Y_{\delta_A} & Y_{\delta_B} & Y_{\delta_p} \\ Z_{\delta_C} & Z_{\delta_A} & Z_{\delta_B} & Z_{\delta_p} \end{bmatrix}$$

$$\underset{B}{M_V} = \begin{bmatrix} L'_u & L'_v & L'_w \\ M_u & M_v & M_w \\ N'_u & N'_v & N'_w \end{bmatrix} \quad \underset{B}{M_\omega} = \begin{bmatrix} L'_p & L'_q & L'_r \\ M_p & M_q & M_r \\ N'_p & N'_q & N'_r \end{bmatrix} \quad \underset{B}{M_\delta} = \begin{bmatrix} L'_{\delta_C} & L'_{\delta_A} & L'_{\delta_B} & L'_{\delta_p} \\ M_{\delta_C} & M_{\delta_A} & M_{\delta_B} & M_{\delta_p} \\ N'_{\delta_C} & N'_{\delta_A} & N'_{\delta_B} & N'_{\delta_p} \end{bmatrix}$$

$$T_\varphi(0) = \begin{bmatrix} 1 & 0 & -\sin\theta_o \\ 0 & \cos\varphi_o & \sin\varphi_o \cos\theta_o \\ 0 & -\sin\varphi_o & \cos\varphi_o \cos\theta_o \end{bmatrix}$$

$$T_{B/E}(0) = T_1\ T_2\ T_3$$

$$T_1 = \begin{bmatrix} 1 & 0 & 0 \\ 0 & \cos\varphi_o & \sin\varphi_o \\ 0 & -\sin\varphi_o & \cos\varphi_o \end{bmatrix} \quad T_2 = \begin{bmatrix} \cos\theta_o & 0 & -\sin\theta_o \\ 0 & 1 & 0 \\ \sin\theta_o & 0 & \cos\theta_o \end{bmatrix} \quad T_3 = \begin{bmatrix} \cos\psi_o & \sin\psi_o & 0 \\ -\sin\psi_o & \cos\psi_o & 0 \\ 0 & 0 & 1 \end{bmatrix}$$

$$\Delta T_{B/E} = DT_1\ T_2\ T_3\ \varphi + T_1\ DT_2\ T_3\ \theta + T_1\ T_2\ DT_3\ \psi$$

TABLE A-2 (Concluded)

$$DT_1 = \begin{bmatrix} 0 & 0 & 0 \\ 0 & -\sin\varphi_o & \cos\varphi_o \\ 0 & -\cos\varphi_o & -\sin\varphi_o \end{bmatrix} \quad DT_2 = \begin{bmatrix} -\sin\theta_o & 0 & -\cos\theta_o \\ 0 & 0 & 0 \\ \cos\theta_o & 0 & -\sin\theta_o \end{bmatrix} \quad DT_3 = \begin{bmatrix} -\sin\psi_o & \cos\psi_o & 0 \\ -\cos\psi_o & -\sin\psi_o & 0 \\ 0 & 0 & 0 \end{bmatrix}$$

$$\Delta T_{B/E}\, \underset{E}{V}(0) = \frac{\partial V}{\partial \eta}\, \Delta\eta$$

$$= \left[[DT_1\ T_2\ T_3\ \underset{E}{V}(0)\ ]\ [T_1\ DT_2\ T_3\ \underset{E}{V}(0)\ ]\ [T_1\ T_2\ DT_3\ \underset{E}{V}(0)\ ] \right] \Delta\eta$$

$$T_{E/B}(0) = T_{B/E}{}^T(0) = (T_1\ T_2\ T_3)^T = T_3{}^T\ T_2{}^T\ T_1{}^T$$

$$\Delta T_{E/B} = T_3{}^T\ T_2{}^T\ DT_1{}^T\ \varphi + T_3{}^T\ DT_2{}^T\ T_1{}^T\ \theta + DT_3{}^T\ T_2{}^T\ T_1{}^T\ \psi$$

$$\Delta T_{E/B}\ T_{B/E}(0)\ \underset{E}{\varepsilon} \triangleq \frac{\partial G}{\partial \eta}\, \Delta\eta = \varepsilon \begin{bmatrix} \cos\theta_o \sin\psi_o & \cos\psi_o & 0 \\ -\cos\theta_o \cos\psi_o & \sin\psi_o & 0 \\ 0 & 0 & 0 \end{bmatrix} \Delta\eta$$

$$T_\eta^{-1} = \begin{bmatrix} 1 & \sin\varphi_o \tan\theta_o & \cos\varphi_o \tan\theta_o \\ 0 & \cos\varphi_o & -\sin\varphi_o \\ 0 & \sin\varphi_o/\cos\theta_o & \cos\varphi_o \sec\theta_o \end{bmatrix}$$

TABLE OF CONTENTS

Section		Page	
I	INTRODUCTION	1	1/A14
	A. Background Information	2	1/B2
	B. Stability and Control Derivatives	4	1/B3
	C. Transfer Function Factors	11	1/B12
II	HUGHES OH-6A	19	1/C7
III	BOEING VERTOL BO-105C	67	1/F14
IV	BELL AH-1G	115	2/C8
V	BELL UH-1H	213	3/C10
VI	SIKORSKY CH-53D	303	4/C4
REFERENCES	. . . . .	358	4/G4
Appendix			
A	PROCEDURE FOR FORMULATING EQUATIONS OF MOTION	359	4/G5
B	ANALYSIS OF MULTILOOP SYSTEM RELATIONSHIPS	371	5/A7

The following matrix equations of motion and corresponding transformation matrices serve as examples and correspond to cases included in the compiled data. The cases include:

Case 4 OH-6A in Hover (Table A-3)

Case 8 OH-6A at 60 kt (Table A-4)

TABLE A-3

SAMPLE OF EQUATIONS OF MOTION AND TRANSFORMATION MATRICES

(OH-6A, HOVER)

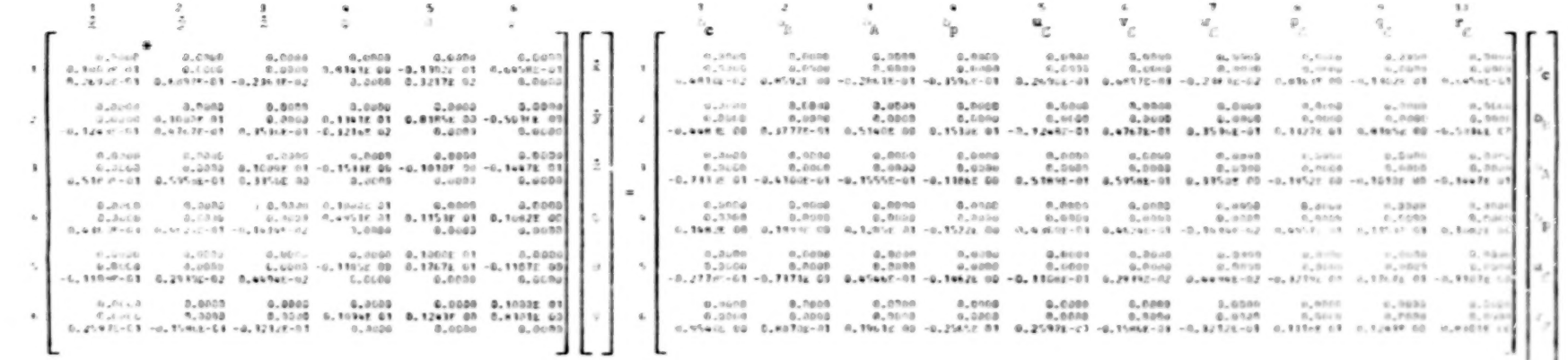

$$T_{b/E}(\omega) = \begin{bmatrix} 0.9998E\ 00 & 0.0000 & -0.2e89E-01 \\ -0.1519E-02 & 0.9986E\ 00 & -0.5319E-01 \\ 0.2685E-01 & 0.5322E-01 & 0.9982E\ 00 \end{bmatrix}$$

$$\frac{\partial W}{\partial \eta} = \begin{bmatrix} 0.0000 & 0.0000 & 0.0000 \\ 0.0000 & 0.0000 & 0.0000 \\ 0.0000 & 0.0000 & 0.0000 \end{bmatrix}$$

$$T_{\eta} = \begin{bmatrix} 0.1000E\ 01 & 0.0000 & -0.2689E-01 \\ 0.0000 & 0.9986E\ 00 & -0.5319E-01 \\ 0.0000 & 0.5322E-01 & 0.9982E\ 00 \end{bmatrix}$$

$$\frac{\partial G}{\partial \eta} = \begin{bmatrix} 0.0000 & 0.4217E\ 03 & 0.0000 \\ -0.3214E\ 02 & 0.0000 & 0.0000 \\ 0.0000 & 0.0000 & 0.0000 \end{bmatrix}$$

---

* Vertical array of three corresponds to coefficients of s^2, s, s^0 respectively.

TABLE A-4

SAMPLE OF EQUATIONS OF MOTION AND TRANSFORMATION MATRICES

(OH-6A, 60 KT)

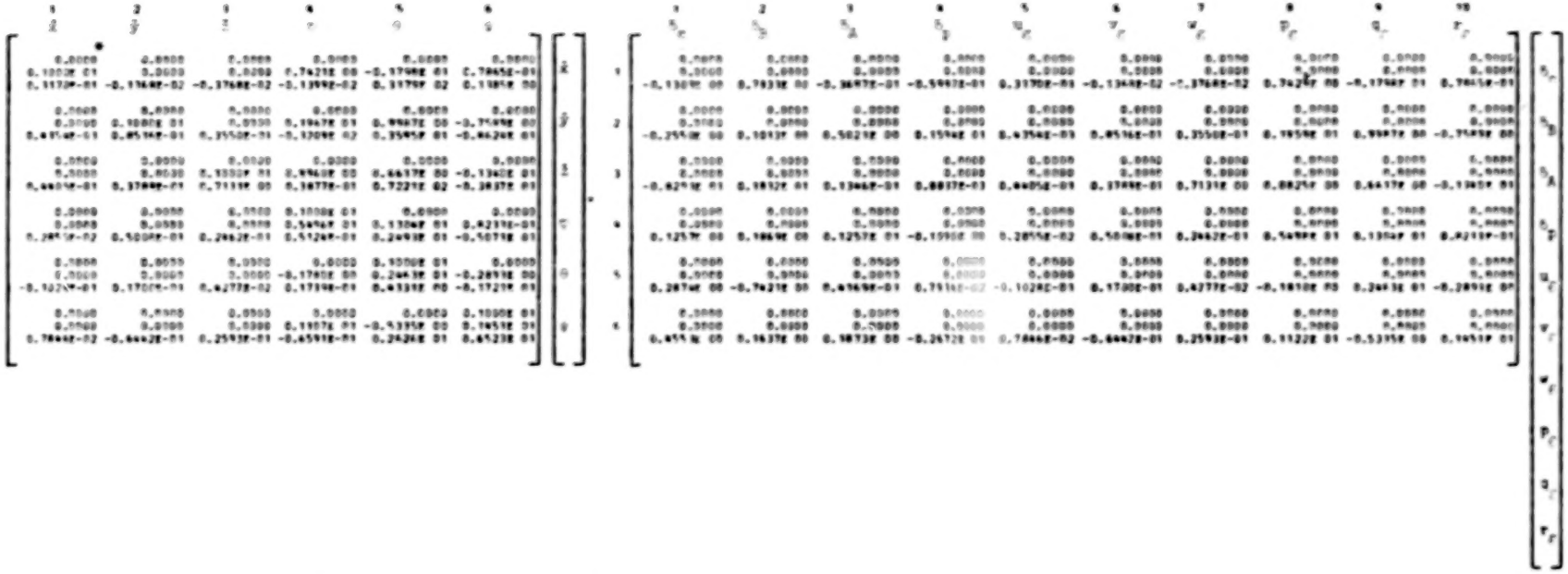

$$T_{B/C^{(1)}} = \begin{bmatrix} 0.9999E\ 00 & 0.0000 & -0.1010E-01 \\ -0.2711E-03 & 0.9996E\ 00 & -0.2685E-01 \\ 0.1010E-01 & 0.2685E-01 & 0.9996E\ 00 \end{bmatrix}$$

$$\frac{\partial T_{B/C}}{\partial \theta} = \begin{bmatrix} 0.0000 & -0.1023E\ 01 & 0.0000 \\ 0.1023E\ 01 & -0.2719E\ 01 & -0.1012E\ 01 \\ 0.2744E-01 & 0.1012E\ 03 & -0.2719E\ 01 \end{bmatrix}$$

$$T_{\dot{\theta}} = \begin{bmatrix} 0.1000E\ 01 & 0.0000 & -0.1010E-01 \\ 0.0000 & 0.9996E\ 00 & -0.2685E-01 \\ 0.0000 & 0.2685E-01 & 0.9996E\ 00 \end{bmatrix}$$

$$\frac{\partial T_{\dot{\theta}}}{\partial \theta} = \begin{bmatrix} 0.0000 & 0.3217E\ 02 & 0.0000 \\ -0.3217E\ 02 & 0.0000 & 0.0000 \\ 0.0000 & 0.0000 & 0.0000 \end{bmatrix}$$

---

* Vertical array of three corresponds to coefficients of s^2, s, s^0 respectively.

APPENDIX B

SUMMARY OF MULTILOOP SYSTEM RELATIONSHIPS

The following is a summary of multiloop system relationships that are useful when using the transfer function data provided in this compilation. For a more complete treatment the reader should consult Chapter 3-5 of Ref. B1. Also, numerous examples are included in Volume Two of this report (Ref. B3).

Consider the following example of a set of linearized equations of motion involving four states and three controls (or disturbances):

$$\begin{bmatrix} a_{11}(s) & a_{12}(s) & a_{13}(s) & a_{14}(s) \\ a_{21}(s) & a_{22}(s) & a_{23}(s) & a_{24}(s) \\ a_{31}(s) & a_{32}(s) & a_{33}(s) & a_{34}(s) \\ a_{41}(s) & a_{42}(s) & a_{43}(s) & a_{44}(s) \end{bmatrix} \begin{bmatrix} x_1(s) \\ x_2(s) \\ x_3(s) \\ x_4(s) \end{bmatrix}$$

$$= \begin{bmatrix} b_{11}(s) & b_{12}(s) & b_{13}(s) \\ b_{21}(s) & b_{22}(s) & b_{23}(s) \\ b_{31}(s) & b_{32}(s) & b_{33}(s) \\ b_{41}(s) & b_{42}(s) & b_{43}(s) \end{bmatrix} \begin{bmatrix} \delta_1(s) \\ \delta_2(s) \\ \delta_3(s) \end{bmatrix}$$

Note that each element in the above matrices can be a polynomial of s.

The characteristic determinant is given by:

$$\Delta(s) = \det \begin{bmatrix} a_{11} & a_{12} & a_{13} & a_{14} \\ a_{21} & a_{22} & a_{23} & a_{24} \\ a_{31} & a_{32} & a_{33} & a_{34} \\ a_{41} & a_{42} & a_{43} & a_{44} \end{bmatrix}$$

Examples of numerators and coupling numerators are:

$$N_{\delta_1}^{x_1}(s) = \det \begin{bmatrix} b_{11} & a_{12} & a_{13} & a_{14} \\ b_{21} & a_{22} & a_{23} & a_{24} \\ b_{31} & a_{32} & a_{33} & a_{34} \\ b_{41} & a_{42} & a_{43} & a_{44} \end{bmatrix} \quad \text{(Type 0 numerator)}$$

$$N_{\delta_1\delta_3}^{x_1x_4}(s) = \det \begin{bmatrix} b_{11} & a_{12} & a_{13} & b_{13} \\ b_{21} & a_{22} & a_{23} & b_{23} \\ b_{31} & a_{32} & a_{33} & b_{33} \\ b_{41} & a_{42} & a_{43} & b_{43} \end{bmatrix} \quad \text{(Type 1 numerator)}$$

$$N_{\delta_3\delta_1\delta_2}^{x_2x_4x_1}(s) = \det \begin{bmatrix} b_{12} & b_{13} & a_{13} & b_{11} \\ b_{22} & b_{23} & a_{23} & b_{21} \\ b_{32} & b_{33} & a_{33} & b_{31} \\ b_{42} & b_{43} & a_{43} & b_{41} \end{bmatrix} \quad \text{(Type 2 numerator)}$$

The largest type coupling numerator is limited by the number of independent variables such as controls and gust disturbances — e.g., Type 1 is the maximum for one control and one disturbance or two controls, Type 2 is the maximum for two controls and one disturbance or three controls, etc.

Also, by way of example, useful numerator identities include:

$$N^{x_1x_2}_{\delta_1\delta_2} = N^{x_2x_1}_{\delta_2\delta_1} = -N^{x_1x_2}_{\delta_2\delta_1}$$

$$N^{x_1x_1}_{\delta_1\delta_2} = N^{x_1x_2}_{\delta_1\delta_1} = 0$$

$$N^{x_1x_2}_{\delta_1\delta_2} = \det \frac{\begin{bmatrix} N^{x_1}_{\delta_1} & N^{x_1}_{\delta_2} \\ N^{x_2}_{\delta_1} & N^{x_2}_{\delta_2} \end{bmatrix}}{\Delta} = \frac{1}{\Delta}\left(N^{x_1}_{\delta_1} N^{x_2}_{\delta_2} - N^{x_1}_{\delta_2} N^{x_2}_{\delta_1}\right)$$

$$N^{x_1x_2x_3}_{\delta_1\delta_2\delta_3} = \det \frac{\begin{bmatrix} N^{x_1}_{\delta_1} & N^{x_1}_{\delta_2} & N^{x_1}_{\delta_3} \\ N^{x_2}_{\delta_1} & N^{x_2}_{\delta_2} & N^{x_2}_{\delta_3} \\ N^{x_3}_{\delta_1} & N^{x_3}_{\delta_2} & N^{x_3}_{\delta_3} \end{bmatrix}}{\Delta^2} = \frac{\begin{array}{l} N^{x_1}_{\delta_1} N^{x_2x_3}_{\delta_2\delta_3} \\ \quad + N^{x_1}_{\delta_2} N^{x_2x_3}_{\delta_3\delta_1} \\ \quad + N^{x_1}_{\delta_3} N^{x_2x_3}_{\delta_1\delta_2} \end{array}}{\Delta}$$

A more general description of the expansion of higher type coupling numerators is given in Ref. B2.

In order to appreciate the application of some of the foregoing numerators and coupling numerators, consider the following block diagram:

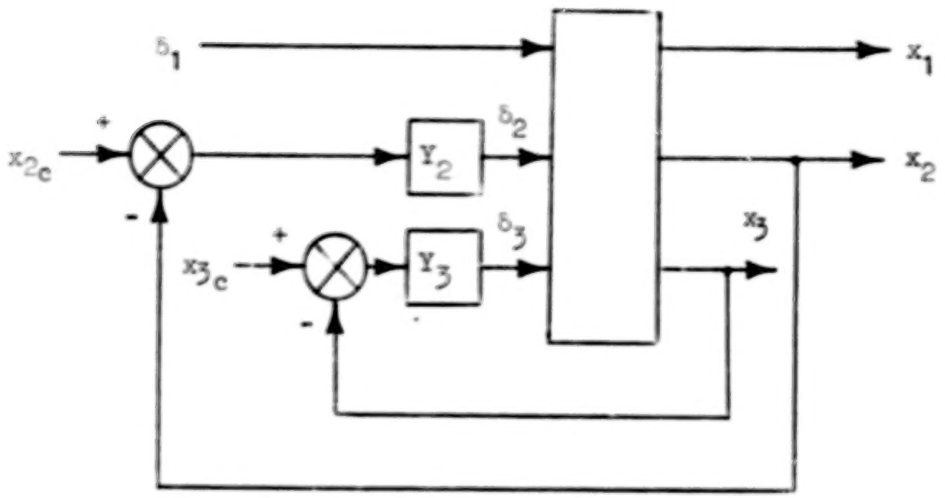

The following are examples of transfer functions involving multiloop feedbacks for this block diagram.

The exact x_1/δ_1 transfer function is:

$$\left.\frac{x_1}{\delta_1}\right|_{\substack{x_2 \to \delta_2 \\ x_3 \to \delta_3}} = \frac{N_{\delta_1}^{x_1} + Y_2 N_{\delta_2\delta_1}^{x_2x_1} + Y_3 N_{\delta_3\delta_1}^{x_3x_1} + Y_2Y_3 N_{\delta_2\delta_3\delta_1}^{x_2x_3x_1}}{\Delta + Y_2 N_{\delta_2}^{x_2} + Y_3 N_{\delta_3}^{x_3} + Y_2Y_3 N_{\delta_2\delta_3}^{x_2x_3}}$$

The x_1/δ_1 transfer function with x_2 and x_3 constrained by δ_2 and δ_3, respectively, is:

$$\left.\frac{x_1}{\delta_1}\right|_{x_2,x_3} = \lim_{\substack{Y_2 \to \infty \\ Y_3 \to \infty}} \left(\left.\frac{x_1}{\delta_1}\right|_{\substack{x_2 \to \delta_2 \\ x_3 \to \delta_3}} \right) = \frac{N_{\delta_2\delta_3\delta_1}^{x_2x_3x_1}}{N_{\delta_2\delta_3}^{x_2x_3}}$$

REFERENCES

B1 McRuer, Duane, Irving Ashkenas, and Dunstan Graham, Aircraft Dynamics and Automatic Control, Princeton University Press, Princeton, New Jersey, 1973.

B2 Hofmann, L. G., G. L. Teper, and R. F. Whitbeck, "Application of Frequency Domain Multivariable Control Synthesis Techniques to an Illustrative Problem in Jet Engine Control," Systems Technology, Inc. Paper No. 209, Presented at NEC International Forum on Multivariable Control, Chicago, Illinois, October 13-14, 1977.

B3 Heffley, Robert K., A Compilation and Analysis of Helicopter Handling Qualities Data, Volume Two: Data Analysis, Systems Technology, Inc. TR 1087-2, March 1978.

1. Report No.	2. Government Accession No.	3. Recipient's Catalog No.
NASA CR-3144		

4. Title and Subtitle	5. Report Date
A COMPILATION AND ANALYSIS OF HELICOPTER HANDLING QUALITIES DATA. Volume One: Data Compilation	August 1979
	6. Performing Organization Code

7. Author(s)	8. Performing Organization Report No.
Robert K. Heffley, Wayne F. Jewell, John M. Lehman, Richard A. Van Winkle	TR 1087-1
	10. Work Unit No.

9. Performing Organization Name and Address	11. Contract or Grant No.
Systems Technology, Inc. 2672 Bayshore-Frontage Road, Suite 505 Mountain View, California 94043	NAS2-9344
	13. Type of Report and Period Covered
12. Sponsoring Agency Name and Address National Aeronautics and Space Administration Ames Research Center Moffett Field, CA 94035	Contractor Report
	14. Sponsoring Agency Code

15. Supplementary Notes

16. Abstract

A compilation and an analysis of helicopter handling qualities data are presented in two volumes. This, the first volume, contains a collection of basic descriptive data, stability derivatives, and transfer functions for a six-degrees-of-freedom, quasi-static model. The data are arranged in a common, compact format for each of the five helicopters represented. The vehicles include the OH-6A, BO-105, AH-1G, UH-1H, and CH-53D. Basic data were supplied under separate contracts by the manufacturer or licensee of each helicopter. The second volume analyzes the data using multiloop, manual control methods. A general compensatory loop structure is applied to coupled longitudinal-lateral-directional equations in such a way that key handling qualities festures can be examined directly. But the overall mathematical complexity is reduced from that of the basic vehicle model. Extensive use is made of constrained state variable relationships and approximate factors in order to gain physical insight.

17. Key Words (Suggested by Author(s))		18. Distribution Statement
Helicopters	OH-6A	UNCLASSIFIED - UNLIMITED
Handling Qualities	BO-105	
Stability and Control	AH-1G	Star Category - 08
Aerodynamic Derivatives	UH-1H	
	CH-53D	

19. Security Classif. (of this report)	20. Security Classif. (of this page)	21. No. of Pages	22. Price*
Unclassified	Unclassified	386	$13.00

*For sale by the National Technical Information Service, Springfield, Virginia 22161

NASA-Langley, 1979

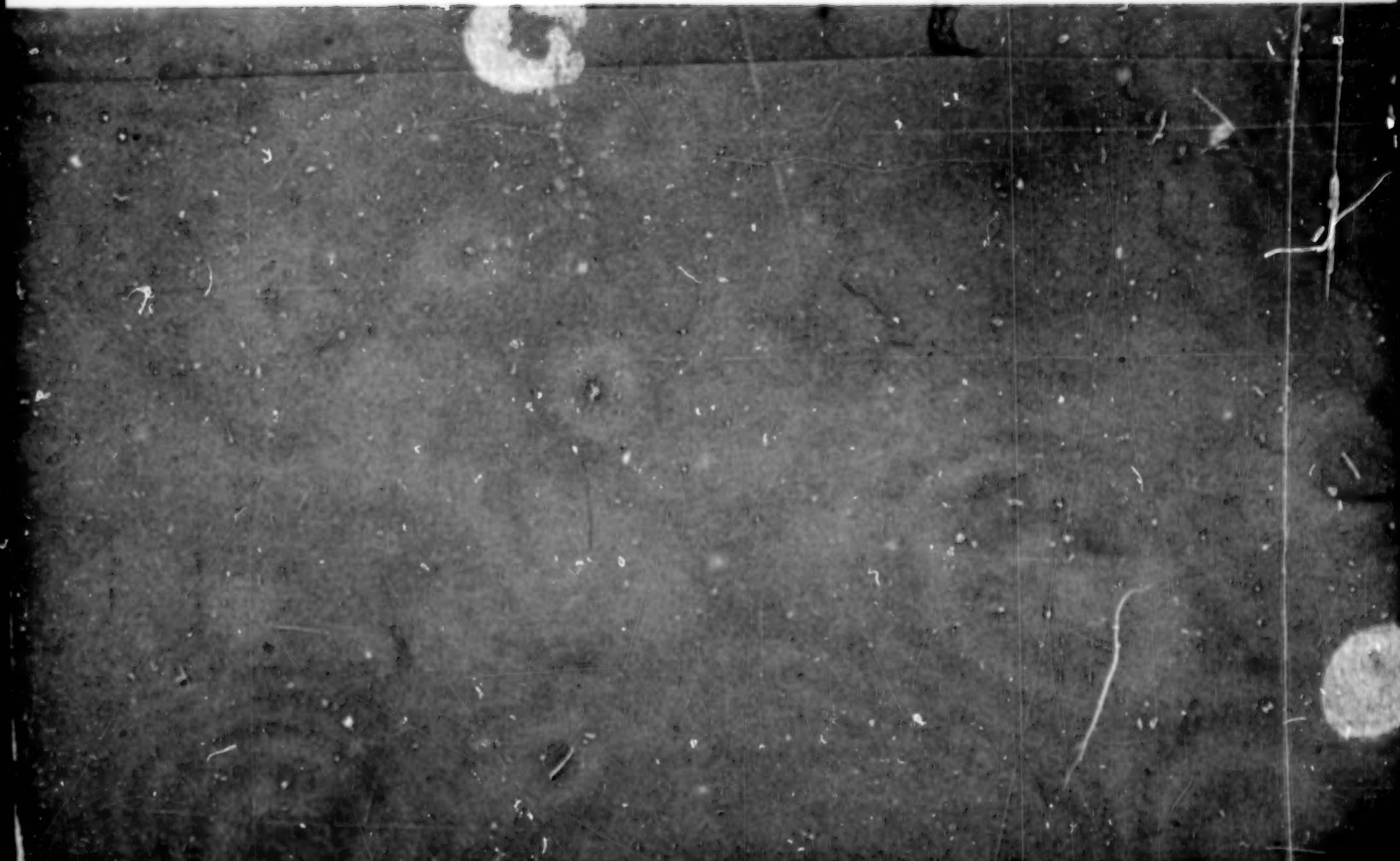

END

April 16, 1981